# SN74LVC1G17 シングル・シュミット・トリガ・バッファ

## 1 特長

- 0.64mm$^2$、0.5mm ピッチの超小型パッケージ (DPW) で供給
- 5V $V_{CC}$ 動作をサポート
- 5.5V までの入力電圧に対応
- 最大 $t_{pd}$ : 4.6ns (3.3V 時)
- 低消費電力、最大 $I_{CC}$ 10μA
- 3.3V において ±24mA の出力駆動能力
- $I_{off}$ により活線挿抜、部分的パワーダウン・モード、バック・ドライブ保護をサポート
- JESD 78、Class II 準拠で 100mA 超のラッチアップ性能
- JESD 22 を超える ESD 保護
  - 2000V、人体モデル(A114-A)
  - 200V、マシン・モデル(A115-A)
  - 1000V、荷電デバイス・モデル(C101)

## 2 アプリケーション

- AV レシーバ
- オーディオ・ドック: ポータブル
- Blu-ray プレーヤー / ホーム・シアター
- MP3 プレーヤ / レコーダ
- パーソナル・デジタル・アシスタント(PDA)
- 電源 : テレコム/サーバー AC/DC 電源: シングル・コントローラ : アナログおよびデジタル
- ソリッド・ステート・ドライブ ( SSD ): クライアントおよびエンタープライズ
- テレビ: LCD、デジタル、高解像度 (HDTV)
- タブレット : エンタープライズ
- ビデオ分析 : サーバー
- ワイヤレス・ヘッドセット、キーボード、マウス

## 3 概要

このシングル・シュミット・トリガ・バッファは、1.65V ~ 5.5V の $V_{CC}$ で動作するように設計されています。

SN74LVC1G17 には 1 つのバッファが搭載されており、ブール関数 Y = A を実行します。

この CMOS デバイスは大きな出力駆動能力を持ちながら、広い Vcc 動作範囲にわたって静的消費電力を低く抑えることができます。

SN74LVC1G17 は、本体サイズ 0.8mm × 0.8mm の超小型 DPW パッケージなど、各種のパッケージで供給されます。

**製品情報**

| 型番 | パッケージ(1) ( 1 ページ ) | 本体サイズ |
|---|---|---|
| SN74LVC1G17 | SOT-23 (5) | 2.9mm × 1.6mm |
| | SC70 (5) | 2.0mm × 1.25mm |
| | X2SON (4) | 0.8mm × 0.8mm |
| | SON (6) | 1.45mm × 1.0mm |
| | SON (6) | 1.0mm × 1.0mm |

(1) 利用可能なすべてのパッケージについては、このデータシートの末尾にある注文情報を参照してください。

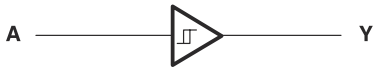


英語版の TI 製品についての情報を翻訳したこの資料は、製品の概要を確認する目的で便宜的に提供しているものです。該当する正式な英語版の最新情報は、www.ti.com で閲覧でき、その内容が常に優先されます。TI では翻訳の正確性および妥当性につきましては一切保証いたしません。実際の設計などの前には、必ず最新版の英語版をご参照くださいますようお願いいたします。

## Table of Contents

**1 特長** ... 1
**2 アプリケーション** ... 1
**3 概要** ... 1
**4 Revision History** ... 2
**5 Pin Configuration and Functions** ... 3
**6 Specifications** ... 4
6.1 Absolute Maximum Ratings ... 4
6.2 Handling Ratings ... 4
6.3 Recommended Operating Conditions ... 5
6.4 Thermal Information ... 5
6.5 Electrical Characteristics—DC Limit Changes ... 6
6.6 Switching Characteristics, $C_L$ = 15 pF ... 7
6.7 Switching Characteristics AC Limit, –40°C TO 85°C ... 7
6.8 Switching Characteristics AC Limit, –40°C TO 125°C ... 7
6.9 Operating Characteristics ... 7
6.10 Typical Characteristics ... 7
**7 Parameter Measurement Information** ... 8
**8 Detailed Description** ... 10
8.1 Overview ... 10
8.2 Functional Block Diagram ... 10
8.3 Feature Description ... 10
8.4 Device Functional Modes ... 10
**9 Applications and Implementation** ... 11
9.1 Application Information ... 11
9.2 Typical Application ... 11
**10 Power Supply Recommendations** ... 12
**11 Layout** ... 13
11.1 Layout Guidelines ... 13
11.2 Layout Example ... 13
**12 Device and Documentation Support** ... 14
12.1 Trademarks ... 14
12.2 Electrostatic Discharge Caution ... 14
12.3 Glossary ... 14
**13 Mechanical, Packaging, and Orderable Information** ... 14

## 4 Revision History

資料番号末尾の英字は改訂を表しています。その改訂履歴は英語版に準じています。

**Changes from Revision V (April 2014) to Revision W (September 2020)** — **Page**

- 文書全体にわたって表、図、相互参照の採番方法を更新 ... 1
- Corrected part number from SN74LVC1G14 to SN74LVC1G17 in the *Application Information*section ... 11
- Corrected typical application schematic in *Typical Application* section ... 11

**Changes from Revision U (February 2014) to Revision V (April 2014)** — **Page**

- Added Pin Functions table. ... 3
- Added Handling Ratings table. ... 4
- Added Thermal Information table. ... 5
- Added Typical Characteristics. ... 7
- Added Application and Implementation section. ... 11
- Added Power Supply Recommendations section. ... 12
- Added Layout section. ... 13

**Changes from Revision T (November 2012) to Revision U (February 2014)** — **Page**

- 「アプリケーション」を追加 ... 1
- Moved $T_{stg}$ to Handling Ratings table ... 4
- Changed MAX operating free-air temperature from 85°C to 125°C ... 5
- Added –40°C to 125°C to Electrical Characteristics table ... 6
- Added Switching Characteristics table for –40°C to 125°C temperature range ... 7

**Changes from Revision S (June 2011) to Revision T (November 2012)** — **Page**

- Removed Ordering Information table ... 3


Copyright © 2020 Texas Instruments Incorporated

## 5 Pin Configuration and Functions

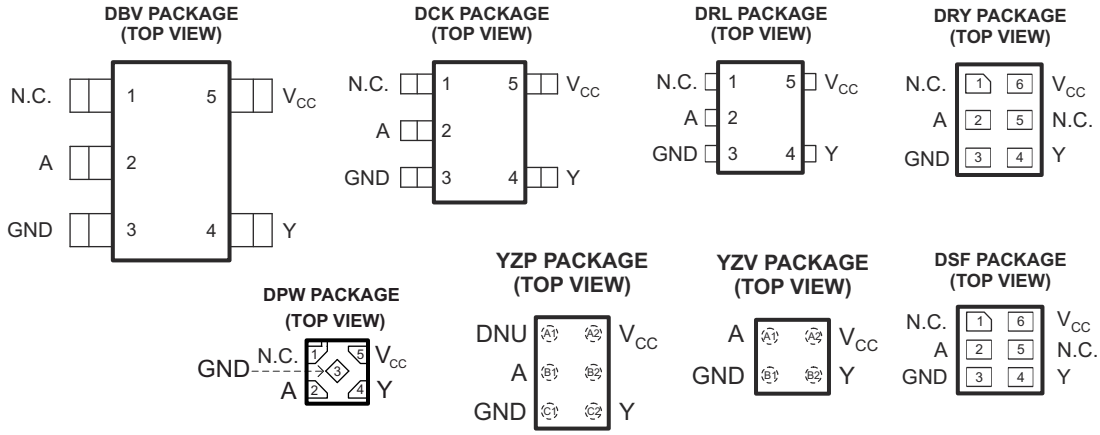


N.C. – No internal connection
See mechanical drawings for dimensions.
DNU – Do not use

### Pin Functions

| PIN | | | | | DESCRIPTION |
|---|---|---|---|---|---|
| NAME | DBV, DCK, DRL, DPW | DRY, DSF | YZP | YZV | |
| NC | 1 | 1, 5 | A1, B2 | – | Not connected |
| A | 2 | 2 | B1 | A1 | Input |
| GND | 3 | 3 | C1 | B1 | Ground |
| Y | 4 | 4 | C2 | B2 | Output |
| $V_{CC}$ | 5 | 6 | A2 | A2 | Power terminal |

Copyright © 2020 Texas Instruments Incorporated

# 6 Specifications

## 6.1 Absolute Maximum Ratings

over operating free-air temperature range (unless otherwise noted)

| | | | MIN | MAX | UNIT |
|---|---|---|---|---|---|
| $V_{CC}$ | Supply voltage range | | –0.5 | 6.5 | V |
| $V_I$ | Input voltage range[(1)] | | –0.5 | 6.5 | V |
| $V_O$ | Voltage range applied to any output in the high-impedance or power-off state[(1)] | | –0.5 | 6.5 | V |
| $V_O$ | Voltage range applied to any output in the high or low state[(1) (2)] | | –0.5 | $V_{CC}$ + 0.5 | V |
| $I_{IK}$ | Input clamp current | $V_I$ < 0 | | –50 | mA |
| $I_{OK}$ | Output clamp current | $V_O$ < 0 | | –50 | mA |
| $I_O$ | Continuous output current | | | ±50 | mA |
| | Continuous current through $V_{CC}$ or GND | | | ±100 | mA |

(1) The input and output negative-voltage ratings may be exceeded if the input and output current ratings are observed.
(2) The value of $V_{CC}$ is provided in the *Recommended Operating Conditions* table.

## 6.2 Handling Ratings

| | | MIN | MAX | UNIT |
|---|---|---|---|---|
| $T_{stg}$ | Storage temperature range | –65 | 150 | °C |
| $V_{ESD}$ [(1)] | Human-Body Model (HBM)[(2)] | 0 | 2 | kV |
| | Charged-Device Model (CDM)[(3)] | 0 | 1 | kV |

(1) Electrostatic discharge (ESD) to measure device sensitivity and immunity to damage caused by assembly line electrostatic discharges in to the device.
(2) Level listed above is the passing level per ANSI, ESDA, and JEDEC JS-001. JEDEC document JEP155 states that 500-V HBM allows safe manufacturing with a standard ESD control process.
(3) Level listed above is the passing level per EIA-JEDEC JESD22-C101. JEDEC document JEP157 states that 250-V CDM allows safe manufacturing with a standard ESD control process.


Copyright © 2020 Texas Instruments Incorporated

## 6.3 Recommended Operating Conditions

| | | | MIN | MAX | UNIT |
|---|---|---|---|---|---|
| $V_{CC}$ | Supply voltage | Operating | 1.65 | 5.5 | V |
| | | Data retention only | 1.5 | | |
| $V_I$ | Input voltage | | 0 | 5.5 | V |
| $V_O$ | Output voltage | | 0 | $V_{CC}$ | V |
| $I_{OH}$ | High-level output current | $V_{CC}$ = 1.65 V | | –4 | mA |
| | | $V_{CC}$ = 2.3 V | | –8 | |
| | | $V_{CC}$ = 3 V | | –16 | |
| | | | | –24 | |
| | | $V_{CC}$ = 4.5 V | | –32 | |
| $I_{OL}$ | Low-level output current | $V_{CC}$ = 1.65 V | | 4 | mA |
| | | $V_{CC}$ = 2.3 V | | 8 | |
| | | $V_{CC}$ = 3 V | | 16 | |
| | | | | 24 | |
| | | $V_{CC}$ = 4.5 V | | 32 | |
| $T_A$ | Operating free-air temperature | | –40 | 125 | °C |

## 6.4 Thermal Information

| THERMAL METRIC[1] | | SN74LVC1G17 | | | | | | | UNIT |
|---|---|---|---|---|---|---|---|---|---|
| | | DBV | DCK | DRL | DRY | YZP | DPW | YZV | |
| | | 5 PINS | 5 PINS | 5 PINS | 6 PINS | 5 PINS | 4 PINS | 4 PINS | |
| $R_{\theta JA}$ | Junction-to-ambient thermal resistance | 229 | 280 | 350 | 608 | 130 | 340 | 181 | °C/W |
| $R_{\theta JC(top)}$ | Junction-to-case (top) thermal resistance | 164 | 66 | 121 | 432 | 54 | 215 | 1 | |
| $R_{\theta JB}$ | Junction-to-board thermal resistance | 62 | 67 | 171 | 446 | 51 | 294 | 39 | |
| $\psi_{JT}$ | Junction-to-top characterization parameter | 44 | 2 | 11 | 191 | 1 | 41 | 8 | |
| $\psi_{JB}$ | Junction-to-board characterization parameter | 62 | 66 | 169 | 442 | 50 | 294 | 38 | |
| $R_{\theta JC(bot)}$ | Junction-to-case (bottom) thermal resistance | – | – | – | 198 | – | 250 | – | |

(1) For more information about traditional and new thermal metrics, see the *IC Package Thermal Metrics* application report, SPRA953.

## 6.5 Electrical Characteristics—DC Limit Changes

over recommended operating free-air temperature range (unless otherwise noted)

| PARAMETER | TEST CONDITIONS | $V_{CC}$ | 25°C | | | –40°C TO 85°C | | | –40°C TO 125°C | | | UNIT |
|---|---|---|---|---|---|---|---|---|---|---|---|---|
| | | | MIN | TYP(1) | MAX | MIN | TYP(1) | MAX | MIN | TYP | MAX | |
| $V_{T+}$ (Positive-going input threshold voltage) | | 1.65 V | | | | 0.76 | | 1.13 | 0.76 | | 1.13 | V |
| | | 2.3 V | | | | 1.08 | | 1.56 | 1.08 | | 1.56 | |
| | | 3 V | | | | 1.48 | | 1.92 | 1.48 | | 1.92 | |
| | | 4.5 V | | | | 2.19 | | 2.74 | 2.19 | | 2.74 | |
| | | 5.5 V | | | | 2.65 | | 3.33 | 2.65 | | 3.33 | |
| $V_{T-}$ (Negative-going input threshold voltage) | | 1.65 V | | | | 0.35 | | 0.59 | 0.35 | | 0.59 | V |
| | | 2.3 V | | | | 0.56 | | 0.88 | 0.56 | | 0.88 | |
| | | 3 V | | | | 0.89 | | 1.2 | 0.89 | | 1.2 | |
| | | 4.5 V | | | | 1.51 | | 1.97 | 1.51 | | 1.97 | |
| | | 5.5 V | | | | 1.88 | | 2.4 | 1.88 | | 2.4 | |
| $\Delta V_T$ Hysteresis ($V_{T+} - V_{T-}$) | | 1.65 V | | | | 0.36 | | 0.64 | 0.36 | | 0.64 | V |
| | | 2.3 V | | | | 0.45 | | 0.78 | 0.45 | | 0.78 | |
| | | 3 V | | | | 0.51 | | 0.83 | 0.51 | | 0.83 | |
| | | 4.5 V | | | | 0.58 | | 0.93 | 0.58 | | 0.93 | |
| | | 5.5 V | | | | 0.69 | | 1.04 | 0.69 | | 1.04 | |
| $V_{OH}$ | $I_{OH}$ = –100 µA | 1.65 V to 5.5 V | | | | $V_{CC}$ – 0.1 | | | $V_{CC}$ – 0.1 | | | V |
| | $I_{OH}$ = –4 mA | 1.65 V | | | | 1.2 | | | 1.2 | | | |
| | $I_{OH}$ = –8 mA | 2.3 V | | | | 1.9 | | | 1.9 | | | |
| | $I_{OH}$ = –16 mA | 3 V | | | | 2.4 | | | 2.4 | | | |
| | $I_{OH}$ = –24 mA | | | | | 2.3 | | | 2.3 | | | |
| | $I_{OH}$ = –32 mA | 4.5 V | | | | 3.8 | | | 3.8 | | | |
| $V_{OL}$ | $I_{OL}$ = 100 µA | 1.65 V to 5.5 V | | | | | | 0.1 | | | 0.1 | V |
| | $I_{OL}$ = 4 mA | 1.65 V | | | | | | 0.45 | | | 0.45 | |
| | $I_{OL}$ = 8 mA | 2.3 V | | | | | | 0.3 | | | 0.3 | |
| | $I_{OL}$ = 16 mA | 3 V | | | | | | 0.4 | | | 0.4 | |
| | $I_{OL}$ = 24 mA | | | | | | | 0.55 | | | 0.55 | |
| | $I_{OL}$ = 32 mA | 4.5 V | | | | | | 0.55 | | | 0.55 | |
| $I_I$ A input | $V_I$ = 5.5 V or GND | 0 to 5.5 V | | | | | | ±5 | | | ±5 | µA |
| $I_{off}$ | $V_I$ or $V_O$ = 5.5 V | 0 | | | | | | ±10 | | | ±10 | µA |
| $I_{CC}$ | $V_I$ = 5.5 V or GND, $I_O$ = 0 | 1.65 V to 5.5 V | | | | | | 10 | | | 10 | µA |
| | $V_I$ = 3.6 V or GND, $I_O$ = 0 | 3 V to 3.6 V | | 0.5 | 1.5 | | | | | | | |
| $\Delta I_{CC}$ | One input at $V_{CC}$ – 0.6 V, Other inputs at $V_{C\ C}$ or GND | 3 V to 5.5 V | | | | | | 500 | | | 500 | µA |
| $C_I$ | $V_I$ = $V_{CC}$ or GND | 3.3 V | | 4.5 | | | | | | | | pF |

(1) All typical values are at $V_{CC}$ = 3.3 V, $T_A$ = 25°C.


Copyright © 2020 Texas Instruments Incorporated

## 6.6 Switching Characteristics, $C_L$ = 15 pF

over recommended operating free-air temperature range, $C_L$ = 15 pF (unless otherwise noted) (see 図 7-1 )

| PARAMETER | FROM (INPUT) | TO (OUTPUT) | –40°C TO 85°C | | | | | | | | UNIT |
|---|---|---|---|---|---|---|---|---|---|---|---|
| | | | $V_{CC}$ = 1.8 V ± 0.15 V | | $V_{CC}$ = 2.5 V ± 0.2 V | | $V_{CC}$ = 3.3 V ± 0.3 V | | $V_{CC}$ = 5 V ± 0.5 V | | |
| | | | MIN | MAX | MIN | MAX | MIN | MAX | MIN | MAX | |
| $t_{pd}$ | A | Y | 2.8 | 9.9 | 1.6 | 5.5 | 1.5 | 4.6 | 0.9 | 4.4 | ns |

## 6.7 Switching Characteristics AC Limit, –40°C TO 85°C

over recommended operating free-air temperature range, $C_L$ = 30 pF or 50 pF (unless otherwise noted) (see 図 7-2)

| PARAMETER | FROM (INPUT) | TO (OUTPUT) | –40°C TO 85°C | | | | | | | | UNIT |
|---|---|---|---|---|---|---|---|---|---|---|---|
| | | | $V_{CC}$ = 1.8 V ± 0.15 V | | $V_{CC}$ = 2.5 V ± 0.2 V | | $V_{CC}$ = 3.3 V ± 0.3 V | | $V_{CC}$ = 5 V ± 0.5 V | | |
| | | | MIN | MAX | MIN | MAX | MIN | MAX | MIN | MAX | |
| $t_{pd}$ | A | Y | 3.8 | 11 | 2 | 6.5 | 1.8 | 5.5 | 1.2 | 5 | ns |

## 6.8 Switching Characteristics AC Limit, –40°C TO 125°C

over recommended operating free-air temperature range, $C_L$ = 30 pF or 50 pF (unless otherwise noted) (see 図 7-2)

| PARAMETER | FROM (INPUT) | TO (OUTPUT) | –40°C TO 125°C | | | | | | | | UNIT |
|---|---|---|---|---|---|---|---|---|---|---|---|
| | | | $V_{CC}$ = 1.8 V ± 0.15 V | | $V_{CC}$ = 2.5 V ± 0.2 V | | $V_{CC}$ = 3.3 V ± 0.3 V | | $V_{CC}$ = 5 V ± 0.5 V | | |
| | | | MIN | MAX | MIN | MAX | MIN | MAX | MIN | MAX | |
| $t_{pd}$ | A | Y | 3.8 | 13 | 2 | 8 | 1.8 | 6.5 | 1.2 | 6 | ns |

## 6.9 Operating Characteristics

$T_A$ = 25°C

| PARAMETER | | TEST CONDITIONS | $V_{CC}$ = 1.8 V | $V_{CC}$ = 2.5 V | $V_{CC}$ = 3.3 V | $V_{CC}$ = 5 V | UNIT |
|---|---|---|---|---|---|---|---|
| | | | TYP | TYP | TYP | TYP | |
| $C_{pd}$ | Power dissipation capacitance | f = 10 MHz | 20 | 21 | 22 | 26 | pF |

## 6.10 Typical Characteristics

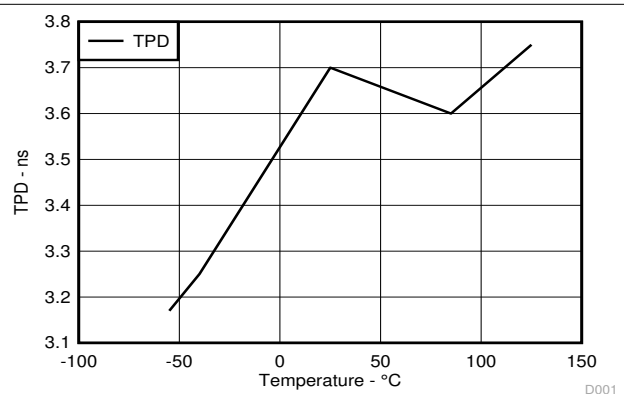


図 6-1. Across Temperature at 3.3V Vcc

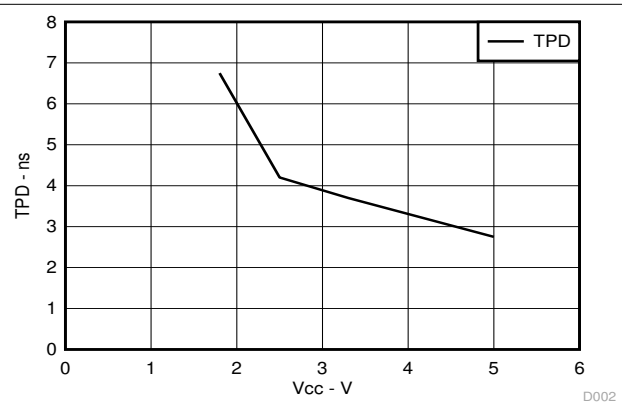


図 6-2. Across Vcc at 25°C

## 7 Parameter Measurement Information

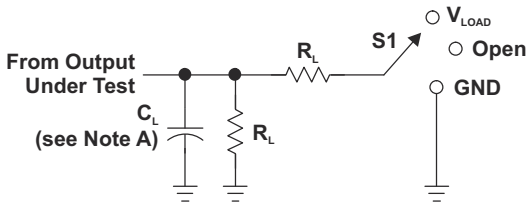


LOAD CIRCUIT

| TEST | S1 |
|---|---|
| $t_{PLH}/t_{PHL}$ | Open |
| $t_{PLZ}/t_{PZL}$ | $V_{LOAD}$ |
| $t_{PHZ}/t_{PZH}$ | GND |

| $V_{CC}$ | INPUTS | | $V_M$ | $V_{LOAD}$ | $C_L$ | $R_L$ | $V_\Delta$ |
|---|---|---|---|---|---|---|---|
| | $V_I$ | $t_r/t_f$ | | | | | |
| 1.8 V ± 0.15 V | $V_{CC}$ | ≤2 ns | $V_{CC}/2$ | 2 × $V_{CC}$ | 15 pF | 1 MΩ | 0.15 V |
| 2.5 V ± 0.2 V | $V_{CC}$ | ≤2 ns | $V_{CC}/2$ | 2 × $V_{CC}$ | 15 pF | 1 MΩ | 0.15 V |
| 3.3 V ± 0.3 V | 3 V | ≤2.5 ns | 1.5 V | 6 V | 15 pF | 1 MΩ | 0.3 V |
| 5 V ± 0.5 V | $V_{CC}$ | ≤2.5 ns | $V_{CC}/2$ | 2 × $V_{CC}$ | 15 pF | 1 MΩ | 0.3 V |

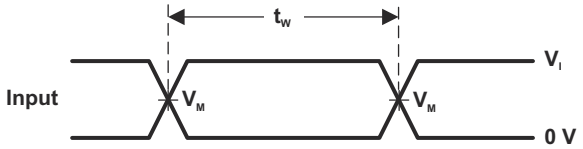


VOLTAGE WAVEFORMS
PULSE DURATION

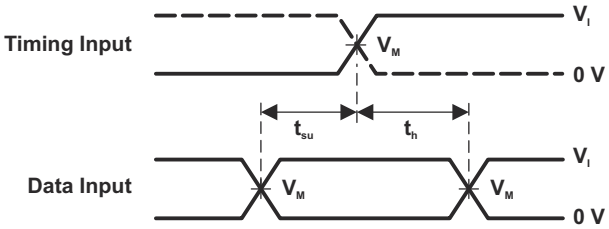


VOLTAGE WAVEFORMS
SETUP AND HOLD TIMES

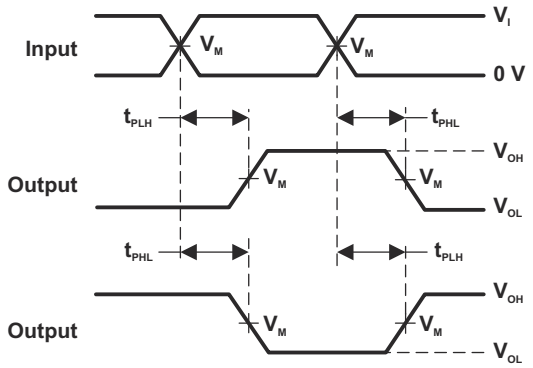


VOLTAGE WAVEFORMS
PROPAGATION DELAY TIMES
INVERTING AND NONINVERTING OUTPUTS

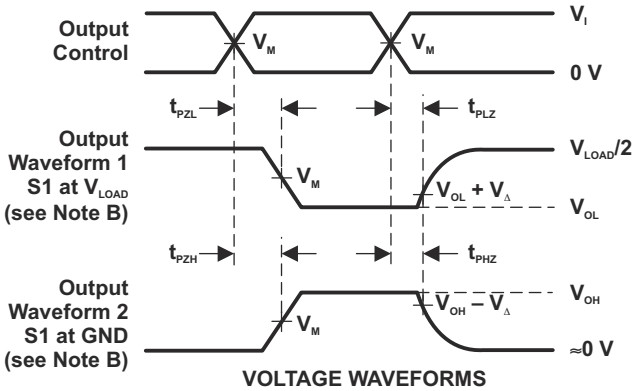


VOLTAGE WAVEFORMS
ENABLE AND DISABLE TIMES
LOW- AND HIGH-LEVEL ENABLING

NOTES: A. $C_L$ includes probe and jig capacitance.
B. Waveform 1 is for an output with internal conditions such that the output is low, except when disabled by the output control. Waveform 2 is for an output with internal conditions such that the output is high, except when disabled by the output control.
C. All input pulses are supplied by generators having the following characteristics: PRR ≤ 10 MHz, $Z_O$ = 50 Ω.
D. The outputs are measured one at a time, with one transition per measurement.
E. $t_{PLZ}$ and $t_{PHZ}$ are the same as $t_{dis}$.
F. $t_{PZL}$ and $t_{PZH}$ are the same as $t_{en}$.
G. $t_{PLH}$ and $t_{PHL}$ are the same as $t_{pd}$.
H. All parameters and waveforms are not applicable to all devices.

**図 7-1. Load Circuit and Voltage Waveforms**


Copyright © 2020 Texas Instruments Incorporated

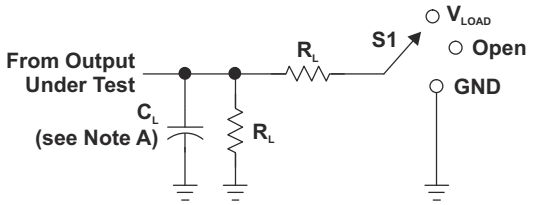


LOAD CIRCUIT

| TEST | S1 |
|---|---|
| $t_{PLH}/t_{PHL}$ | Open |
| $t_{PLZ}/t_{PZL}$ | $V_{LOAD}$ |
| $t_{PHZ}/t_{PZH}$ | GND |

| $V_{CC}$ | INPUTS | | $V_M$ | $V_{LOAD}$ | $C_L$ | $R_L$ | $V_\Delta$ |
|---|---|---|---|---|---|---|---|
| | $V_I$ | $t_r/t_f$ | | | | | |
| 1.8 V ± 0.15 V | $V_{CC}$ | ≤2 ns | $V_{CC}/2$ | 2 × $V_{CC}$ | 30 pF | 1 kΩ | 0.15 V |
| 2.5 V ± 0.2 V | $V_{CC}$ | ≤2 ns | $V_{CC}/2$ | 2 × $V_{CC}$ | 30 pF | 500 Ω | 0.15 V |
| 3.3 V ± 0.3 V | 3 V | ≤2.5 ns | 1.5 V | 6 V | 50 pF | 500 Ω | 0.3 V |
| 5 V ± 0.5 V | $V_{CC}$ | ≤2.5 ns | $V_{CC}/2$ | 2 × $V_{CC}$ | 50 pF | 500 Ω | 0.3 V |

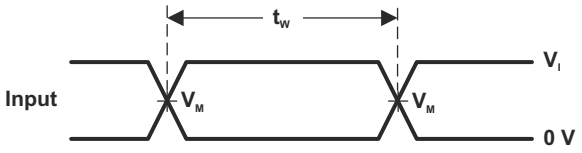


VOLTAGE WAVEFORMS
PULSE DURATION

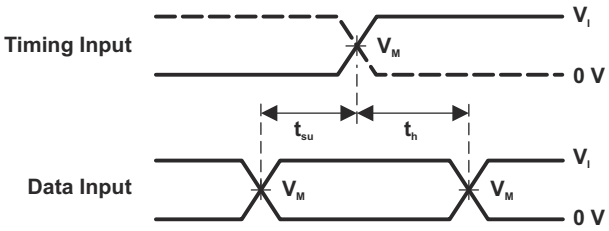


VOLTAGE WAVEFORMS
SETUP AND HOLD TIMES

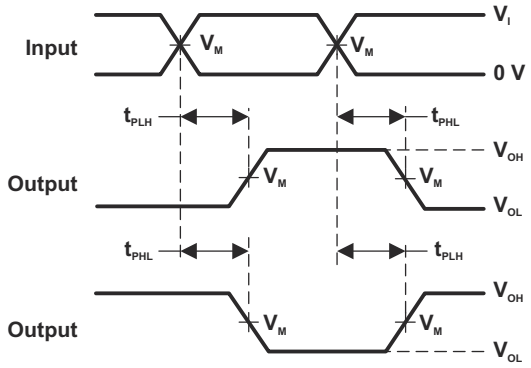


VOLTAGE WAVEFORMS
PROPAGATION DELAY TIMES
INVERTING AND NONINVERTING OUTPUTS

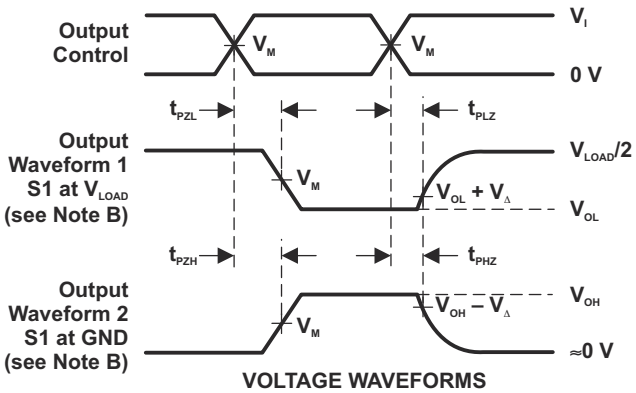


VOLTAGE WAVEFORMS
ENABLE AND DISABLE TIMES
LOW- AND HIGH-LEVEL ENABLING

NOTES: A. $C_L$ includes probe and jig capacitance.
B. Waveform 1 is for an output with internal conditions such that the output is low, except when disabled by the output control. Waveform 2 is for an output with internal conditions such that the output is high, except when disabled by the output control.
C. All input pulses are supplied by generators having the following characteristics: PRR ≤ 10 MHz, $Z_O$ = 50 Ω.
D. The outputs are measured one at a time, with one transition per measurement.
E. $t_{PLZ}$ and $t_{PHZ}$ are the same as $t_{dis}$.
F. $t_{PZL}$ and $t_{PZH}$ are the same as $t_{en}$.
G. $t_{PLH}$ and $t_{PHL}$ are the same as $t_{pd}$.
H. All parameters and waveforms are not applicable to all devices.

**図 7-2. Load Circuit and Voltage Waveforms**

# 8 Detailed Description

## 8.1 Overview

The SN74LVC1G17 device contains one Schmitt trigger buffer and performs the Boolean function Y = A. The device functions as an independent buffer, but because of Schmitt action, it will have different input threshold levels for a positive-going (VT+) and negative-going signals.

The DPW package technology is a major breakthrough in IC packaging. Its tiny 0.64 mm square footprint saves significant board space over other package options while still retaining the traditional manufacturing friendly lead pitch of 0.5 mm.

This device is fully specified for partial-power-down applications using $I_{off}$. The $I_{off}$ circuitry disables the outputs, preventing damaging current backflow through the device when it is powered down.

## 8.2 Functional Block Diagram

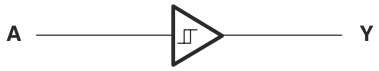


## 8.3 Feature Description

- Wide operating voltage range.
  - Operates From 1.65 V to 5.5 V.
- Allows Down voltage translation.
- Inputs accept voltages to 5.5 V.
- $I_{off}$ feature allows voltages on the inputs and outputs, when $V_{CC}$ is 0 V.

## 8.4 Device Functional Modes

**Table 8-1. Function Table**

| INPUT A | OUTPUT Y |
|---|---|
| H | H |
| L | L |


Copyright © 2020 Texas Instruments Incorporated

# 9 Applications and Implementation

**Note**

Information in the following applications sections is not part of the TI component specification, and TI does not warrant its accuracy or completeness. TI's customers are responsible for determining suitability of components for their purposes. Customers should validate and test their design implementation to confirm system functionality.

## 9.1 Application Information

The SN74LVC1G17 is a high drive CMOS device that can be used for a multitude of buffer type functions where the input is slow or noisy. It can produce 24 mA of drive current at 3.3 V making it Ideal for driving multiple outputs and good for high speed applications up to 100 MHz. The inputs are 5.5 V tolerant allowing it to translate down to $V_{CC}$.

## 9.2 Typical Application

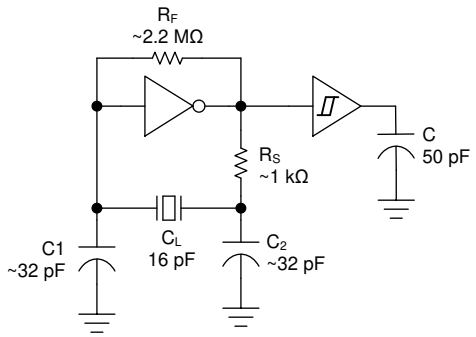


### 9.2.1 Design Requirements

This device uses CMOS technology and has balanced output drive. Care should be taken to avoid bus contention because it can drive currents that would exceed maximum limits. The high drive will also create fast edges into light loads so routing and load conditions should be considered to prevent ringing.

### 9.2.2 Detailed Design Procedure

1. Recommended Input Conditions
   - Rise time and fall time specs. See (Δt/ΔV) in the Recommended Operating Conditions table.
   - Specified high and low levels. See ($V_{IH}$ and $V_{IL}$) in the Recommended Operating Conditions table.
   - Inputs are overvoltage tolerant allowing them to go as high as ($V_I$ max) in the Recommended Operating Conditions table at any valid $V_{CC}$ .
2. Recommend Output Conditions
   - Load currents should not exceed ($I_O$ max) per output and should not exceed (continuous current through $V_{CC}$ or GND) total current for the part. These limits are located in the Absolute Max Ratings table.
   - Outputs should not be pulled above $V_{CC}$.

### 9.2.3 Application Curves

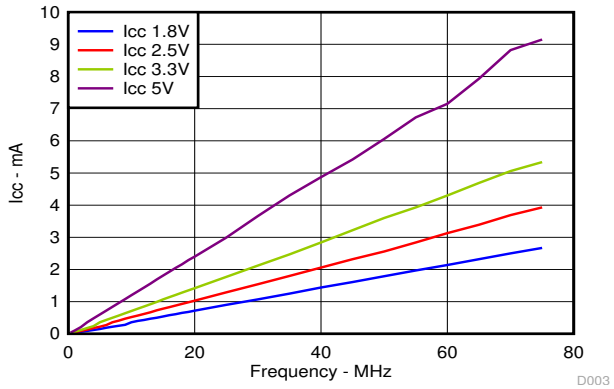


**図 9-1. ICC vs Frequency**

## 10 Power Supply Recommendations

The power supply can be any voltage between the min and max supply voltage rating located in the Recommended Operating Conditions table.

Each Vcc pin should have a good bypass capacitor to prevent power disturbance. For devices with a single supply a 0.1-μF capacitor is recommended and if there are multiple Vcc pins then a 0.01-μF or 0.022-μF capacitor is recommended for each power pin. It is ok to parallel multiple bypass caps to reject different frequencies of noise. 0.1-μF and 1-μF capacitors are commonly used in parallel. The bypass capacitor should be installed as close to the power pin as possible for best results.


Copyright © 2020 Texas Instruments Incorporated

# 11 Layout

## 11.1 Layout Guidelines

When using multiple bit logic devices inputs should not ever float. In many cases, functions or parts of functions of digital logic devices are unused, for example, when only two inputs of a triple-input AND gate are used or only 3 of the 4 buffer gates are used. Such input terminals should not be left unconnected because the undefined voltages at the outside connections result in undefined operational states. Specified below are the rules that must be observed under all circumstances. All unused inputs of digital logic devices must be connected to a high or low bias to prevent them from floating. The logic level that should be applied to any particular unused input depends on the function of the device. Generally they will be tied to Gnd or Vcc whichever make more sense or is more convenient.

## 11.2 Layout Example

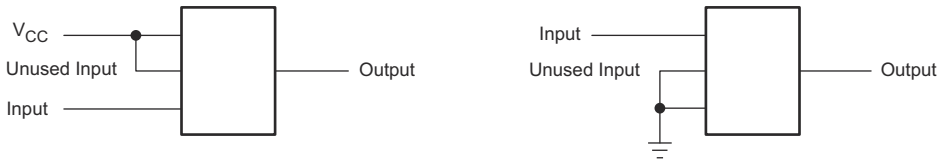

# 12 Device and Documentation Support

## 12.1 Trademarks

すべての商標は、それぞれの所有者に帰属します。

## 12.2 Electrostatic Discharge Caution

This integrated circuit can be damaged by ESD. Texas Instruments recommends that all integrated circuits be handled with appropriate precautions. Failure to observe proper handling and installation procedures can cause damage.

ESD damage can range from subtle performance degradation to complete device failure. Precision integrated circuits may be more susceptible to damage because very small parametric changes could cause the device not to meet its published specifications.

## 12.3 Glossary

**TI Glossary** This glossary lists and explains terms, acronyms, and definitions.

# 13 Mechanical, Packaging, and Orderable Information

The following pages include mechanical packaging and orderable information. This information is the most current data available for the designated devices. This data is subject to change without notice and revision of this document. For browser-based versions of this data sheet, refer to the left-hand navigation.


Copyright © 2020 Texas Instruments Incorporated

## PACKAGING INFORMATION

| Orderable part number | Status (1) | Material type (2) | Package \| Pins | Package qty \| Carrier | RoHS (3) | Lead finish/ Ball material (4) | MSL rating/ Peak reflow (5) | Op temp (°C) | Part marking (6) |
|---|---|---|---|---|---|---|---|---|---|
| SN74LVC1G17DBVR | Active | Production | SOT-23 (DBV) \| 5 | 3000 \| LARGE T&R | Yes | NIPDAU \| SN \| NIPDAU | Level-1-260C-UNLIM | -40 to 125 | (C175, C17F, C17J, C17K, C17R) (C17H, C17P, C17S) |
| SN74LVC1G17DBVR.A | Active | Production | SOT-23 (DBV) \| 5 | 3000 \| LARGE T&R | Yes | SN | Level-1-260C-UNLIM | -40 to 125 | (C175, C17F, C17J, C17K, C17R) (C17H, C17P, C17S) |
| SN74LVC1G17DBVR.B | Active | Production | SOT-23 (DBV) \| 5 | 3000 \| LARGE T&R | Yes | SN | Level-1-260C-UNLIM | -40 to 125 | (C175, C17F, C17J, C17K, C17R) (C17H, C17P, C17S) |
| SN74LVC1G17DBVRE4 | Active | Production | SOT-23 (DBV) \| 5 | 3000 \| LARGE T&R | Yes | NIPDAU | Level-1-260C-UNLIM | -40 to 125 | C17F |
| SN74LVC1G17DBVRG4 | Active | Production | SOT-23 (DBV) \| 5 | 3000 \| LARGE T&R | Yes | NIPDAU | Level-1-260C-UNLIM | -40 to 125 | C17F |
| SN74LVC1G17DBVRG4.A | Active | Production | SOT-23 (DBV) \| 5 | 3000 \| LARGE T&R | Yes | NIPDAU | Level-1-260C-UNLIM | -40 to 125 | C17F |
| SN74LVC1G17DBVRG4.B | Active | Production | SOT-23 (DBV) \| 5 | 3000 \| LARGE T&R | Yes | NIPDAU | Level-1-260C-UNLIM | -40 to 125 | C17F |
| SN74LVC1G17DBVT | Active | Production | SOT-23 (DBV) \| 5 | 250 \| SMALL T&R | Yes | NIPDAU \| SN \| NIPDAU | Level-1-260C-UNLIM | -40 to 125 | (C175, C17F, C17J, C17K, C17R) (C17H, C17P, C17S) |
| SN74LVC1G17DBVT.B | Active | Production | SOT-23 (DBV) \| 5 | 250 \| SMALL T&R | Yes | NIPDAU | Level-1-260C-UNLIM | -40 to 125 | (C175, C17F, C17J, C17K, C17R) (C17H, C17P, C17S) |
| SN74LVC1G17DBVTE4 | Active | Production | SOT-23 (DBV) \| 5 | 250 \| SMALL T&R | Yes | NIPDAU | Level-1-260C-UNLIM | -40 to 125 | C17F |
| SN74LVC1G17DBVTG4 | Active | Production | SOT-23 (DBV) \| 5 | 250 \| SMALL T&R | Yes | NIPDAU | Level-1-260C-UNLIM | -40 to 125 | C17F |
| SN74LVC1G17DBVTG4.B | Active | Production | SOT-23 (DBV) \| 5 | 250 \| SMALL T&R | Yes | NIPDAU | Level-1-260C-UNLIM | -40 to 125 | C17F |
| SN74LVC1G17DCK3 | Last Time Buy | Production | SC70 (DCK) \| 5 | 3000 \| LARGE T&R | Yes | SNBI | Level-1-260C-UNLIM | -40 to 85 | (C7F, C7Z) |
| SN74LVC1G17DCK3.B | Last Time Buy | Production | SC70 (DCK) \| 5 | 3000 \| LARGE T&R | Yes | SNBI | Level-1-260C-UNLIM | -40 to 85 | (C7F, C7Z) |
| SN74LVC1G17DCKR | Active | Production | SC70 (DCK) \| 5 | 3000 \| LARGE T&R | Yes | NIPDAU \| SN \| NIPDAU | Level-1-260C-UNLIM | -40 to 125 | (C75, C7F, C7J, C7K, C7R, C7T) (C7H, C7P, C7S) |

| Orderable part number | Status (1) | Material type (2) | Package \| Pins | Package qty \| Carrier | RoHS (3) | Lead finish/ Ball material (4) | MSL rating/ Peak reflow (5) | Op temp (°C) | Part marking (6) |
|---|---|---|---|---|---|---|---|---|---|
| SN74LVC1G17DCKR.A | Active | Production | SC70 (DCK) \| 5 | 3000 \| LARGE T&R | Yes | NIPDAU | Level-1-260C-UNLIM | -40 to 125 | (C75, C7F, C7J, C7K, C7R, C7T) (C7H, C7P, C7S) |
| SN74LVC1G17DCKR.B | Active | Production | SC70 (DCK) \| 5 | 3000 \| LARGE T&R | Yes | NIPDAU | Level-1-260C-UNLIM | -40 to 125 | (C75, C7F, C7J, C7K, C7R, C7T) (C7H, C7P, C7S) |
| SN74LVC1G17DCKRE4 | Active | Production | SC70 (DCK) \| 5 | 3000 \| LARGE T&R | Yes | NIPDAU | Level-1-260C-UNLIM | -40 to 125 | C75 C7S |
| SN74LVC1G17DCKRG4 | Active | Production | SC70 (DCK) \| 5 | 3000 \| LARGE T&R | Yes | NIPDAU | Level-1-260C-UNLIM | -40 to 125 | C75 C7S |
| SN74LVC1G17DCKRG4.A | Active | Production | SC70 (DCK) \| 5 | 3000 \| LARGE T&R | Yes | NIPDAU | Level-1-260C-UNLIM | -40 to 125 | C75 C7S |
| SN74LVC1G17DCKRG4.B | Active | Production | SC70 (DCK) \| 5 | 3000 \| LARGE T&R | Yes | NIPDAU | Level-1-260C-UNLIM | -40 to 125 | C75 C7S |
| SN74LVC1G17DCKT | Active | Production | SC70 (DCK) \| 5 | 250 \| SMALL T&R | Yes | NIPDAU \| SN \| NIPDAU | Level-1-260C-UNLIM | -40 to 125 | (C75, C7F, C7J, C7K, C7R, C7T) (C7H, C7P, C7S) |
| SN74LVC1G17DCKT.B | Active | Production | SC70 (DCK) \| 5 | 250 \| SMALL T&R | Yes | NIPDAU | Level-1-260C-UNLIM | -40 to 125 | (C75, C7F, C7J, C7K, C7R, C7T) (C7H, C7P, C7S) |
| SN74LVC1G17DCKTE4 | Active | Production | SC70 (DCK) \| 5 | 250 \| SMALL T&R | Yes | NIPDAU | Level-1-260C-UNLIM | -40 to 125 | C75 C7S |
| SN74LVC1G17DCKTG4 | Active | Production | SC70 (DCK) \| 5 | 250 \| SMALL T&R | Yes | NIPDAU | Level-1-260C-UNLIM | -40 to 125 | C75 C7S |
| SN74LVC1G17DCKTG4.B | Active | Production | SC70 (DCK) \| 5 | 250 \| SMALL T&R | Yes | NIPDAU | Level-1-260C-UNLIM | -40 to 125 | C75 C7S |
| SN74LVC1G17DPWR | Active | Production | X2SON (DPW) \| 5 | 3000 \| LARGE T&R | Yes | NIPDAU | Level-1-260C-UNLIM | -40 to 125 | S4 |
| SN74LVC1G17DPWR.B | Active | Production | X2SON (DPW) \| 5 | 3000 \| LARGE T&R | Yes | NIPDAU | Level-1-260C-UNLIM | -40 to 125 | S4 |
| SN74LVC1G17DRLR | Active | Production | SOT-5X3 (DRL) \| 5 | 4000 \| LARGE T&R | Yes | NIPDAUAG | Level-1-260C-UNLIM | -40 to 125 | (C77, C7R) |
| SN74LVC1G17DRLR.B | Active | Production | SOT-5X3 (DRL) \| 5 | 4000 \| LARGE T&R | Yes | NIPDAUAG | Level-1-260C-UNLIM | -40 to 125 | (C77, C7R) |
| SN74LVC1G17DRLRG4 | Active | Production | SOT-5X3 (DRL) \| 5 | 4000 \| LARGE T&R | Yes | NIPDAUAG | Level-1-260C-UNLIM | -40 to 125 | (C77, C7R) |
| SN74LVC1G17DRYR | Active | Production | SON (DRY) \| 6 | 5000 \| LARGE T&R | Yes | NIPDAU | Level-1-260C-UNLIM | -40 to 125 | C7 |
| SN74LVC1G17DRYR.B | Active | Production | SON (DRY) \| 6 | 5000 \| LARGE T&R | Yes | NIPDAU | Level-1-260C-UNLIM | -40 to 125 | C7 |
| SN74LVC1G17DRYRG4 | Active | Production | SON (DRY) \| 6 | 5000 \| LARGE T&R | Yes | NIPDAU | Level-1-260C-UNLIM | -40 to 125 | C7 |
| SN74LVC1G17DRYRG4.B | Active | Production | SON (DRY) \| 6 | 5000 \| LARGE T&R | Yes | NIPDAU | Level-1-260C-UNLIM | -40 to 125 | C7 |

| Orderable part number | Status (1) | Material type (2) | Package \| Pins | Package qty \| Carrier | RoHS (3) | Lead finish/ Ball material (4) | MSL rating/ Peak reflow (5) | Op temp (°C) | Part marking (6) |
|---|---|---|---|---|---|---|---|---|---|
| SN74LVC1G17DSFR | Active | Production | SON (DSF) \| 6 | 5000 \| LARGE T&R | Yes | NIPDAU \| NIPDAUAG | Level-1-260C-UNLIM | -40 to 125 | C7 |
| SN74LVC1G17DSFR.B | Active | Production | SON (DSF) \| 6 | 5000 \| LARGE T&R | Yes | NIPDAUAG | Level-1-260C-UNLIM | -40 to 125 | C7 |
| SN74LVC1G17DSFRG4 | Active | Production | SON (DSF) \| 6 | 5000 \| LARGE T&R | Yes | NIPDAU | Level-1-260C-UNLIM | -40 to 125 | C7 |
| SN74LVC1G17DSFRG4.B | Active | Production | SON (DSF) \| 6 | 5000 \| LARGE T&R | Yes | NIPDAU | Level-1-260C-UNLIM | -40 to 125 | C7 |
| SN74LVC1G17YZPR | Active | Production | DSBGA (YZP) \| 5 | 3000 \| LARGE T&R | Yes | SNAGCU | Level-1-260C-UNLIM | -40 to 85 | C7N |
| SN74LVC1G17YZPR.B | Active | Production | DSBGA (YZP) \| 5 | 3000 \| LARGE T&R | Yes | SNAGCU | Level-1-260C-UNLIM | -40 to 85 | C7N |
| SN74LVC1G17YZTR.B | Active | Production | DSBGA (YZT) \| 4 | 3000 \| LARGE T&R | Yes | SNAGCU | Level-1-260C-UNLIM | -40 to 85 | C7 |
| SN74LVC1G17YZVR | Active | Production | DSBGA (YZV) \| 4 | 3000 \| LARGE T&R | Yes | SNAGCU | Level-1-260C-UNLIM | -40 to 85 | C7 (7, N) |
| SN74LVC1G17YZVR.B | Active | Production | DSBGA (YZV) \| 4 | 3000 \| LARGE T&R | Yes | SNAGCU | Level-1-260C-UNLIM | -40 to 85 | C7 (7, N) |

(1) **Status:** For more details on status, see our product life cycle.

(2) **Material type:** When designated, preproduction parts are prototypes/experimental devices, and are not yet approved or released for full production. Testing and final process, including without limitation quality assurance, reliability performance testing, and/or process qualification, may not yet be complete, and this item is subject to further changes or possible discontinuation. If available for ordering, purchases will be subject to an additional waiver at checkout, and are intended for early internal evaluation purposes only. These items are sold without warranties of any kind.

(3) **RoHS values:** Yes, No, RoHS Exempt. See the TI RoHS Statement for additional information and value definition.

(4) **Lead finish/Ball material:** Parts may have multiple material finish options. Finish options are separated by a vertical ruled line. Lead finish/Ball material values may wrap to two lines if the finish value exceeds the maximum column width.

(5) **MSL rating/Peak reflow:** The moisture sensitivity level ratings and peak solder (reflow) temperatures. In the event that a part has multiple moisture sensitivity ratings, only the lowest level per JEDEC standards is shown. Refer to the shipping label for the actual reflow temperature that will be used to mount the part to the printed circuit board.

(6) **Part marking:** There may be an additional marking, which relates to the logo, the lot trace code information, or the environmental category of the part.

Multiple part markings will be inside parentheses. Only one part marking contained in parentheses and separated by a "~" will appear on a part. If a line is indented then it is a continuation of the previous line and the two combined represent the entire part marking for that device.

**Important Information and Disclaimer:**The information provided on this page represents TI's knowledge and belief as of the date that it is provided. TI bases its knowledge and belief on information provided by third parties, and makes no representation or warranty as to the accuracy of such information. Efforts are underway to better integrate information from third parties. TI has taken and continues to take reasonable steps to provide representative

and accurate information but may not have conducted destructive testing or chemical analysis on incoming materials and chemicals. TI and TI suppliers consider certain information to be proprietary, and thus CAS numbers and other limited information may not be available for release.

In no event shall TI's liability arising out of such information exceed the total purchase price of the TI part(s) at issue in this document sold by TI to Customer on an annual basis.

**OTHER QUALIFIED VERSIONS OF SN74LVC1G17 :**

- Automotive : SN74LVC1G17-Q1
- Enhanced Product : SN74LVC1G17-EP

NOTE: Qualified Version Definitions:

- Automotive - Q100 devices qualified for high-reliability automotive applications targeting zero defects
- Enhanced Product - Supports Defense, Aerospace and Medical Applications

## TAPE AND REEL INFORMATION

**REEL DIMENSIONS**

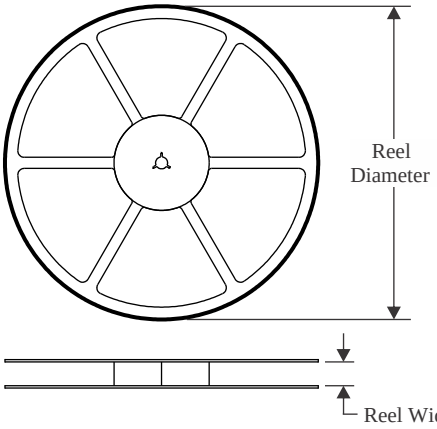


**TAPE DIMENSIONS**

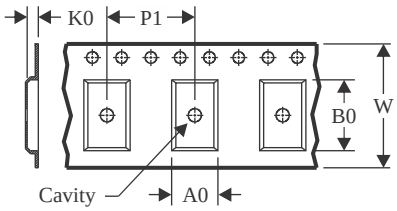


| | |
|---|---|
| A0 | Dimension designed to accommodate the component width |
| B0 | Dimension designed to accommodate the component length |
| K0 | Dimension designed to accommodate the component thickness |
| W | Overall width of the carrier tape |
| P1 | Pitch between successive cavity centers |

**QUADRANT ASSIGNMENTS FOR PIN 1 ORIENTATION IN TAPE**

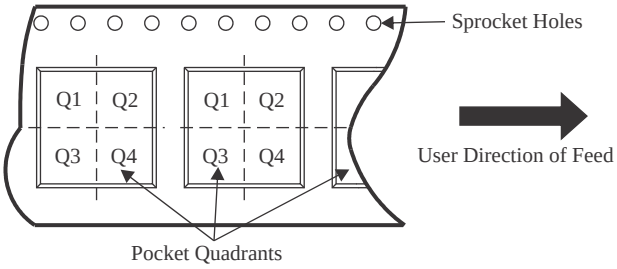


*All dimensions are nominal

| Device | Package Type | Package Drawing | Pins | SPQ | Reel Diameter (mm) | Reel Width W1 (mm) | A0 (mm) | B0 (mm) | K0 (mm) | P1 (mm) | W (mm) | Pin1 Quadrant |
|---|---|---|---|---|---|---|---|---|---|---|---|---|
| SN74LVC1G17DBVR | SOT-23 | DBV | 5 | 3000 | 180.0 | 8.4 | 3.2 | 3.2 | 1.4 | 4.0 | 8.0 | Q3 |
| SN74LVC1G17DBVRG4 | SOT-23 | DBV | 5 | 3000 | 178.0 | 9.0 | 3.23 | 3.17 | 1.37 | 4.0 | 8.0 | Q3 |
| SN74LVC1G17DBVT | SOT-23 | DBV | 5 | 250 | 180.0 | 8.4 | 3.23 | 3.17 | 1.37 | 4.0 | 8.0 | Q3 |
| SN74LVC1G17DBVT | SOT-23 | DBV | 5 | 250 | 178.0 | 9.0 | 3.3 | 3.2 | 1.4 | 4.0 | 8.0 | Q3 |
| SN74LVC1G17DBVTG4 | SOT-23 | DBV | 5 | 250 | 178.0 | 9.0 | 3.23 | 3.17 | 1.37 | 4.0 | 8.0 | Q3 |
| SN74LVC1G17DCKR | SC70 | DCK | 5 | 3000 | 178.0 | 9.0 | 2.4 | 2.5 | 1.2 | 4.0 | 8.0 | Q3 |
| SN74LVC1G17DCKRG4 | SC70 | DCK | 5 | 3000 | 178.0 | 9.2 | 2.4 | 2.4 | 1.22 | 4.0 | 8.0 | Q3 |
| SN74LVC1G17DCKT | SC70 | DCK | 5 | 250 | 178.0 | 9.2 | 2.4 | 2.4 | 1.22 | 4.0 | 8.0 | Q3 |
| SN74LVC1G17DCKT | SC70 | DCK | 5 | 250 | 180.0 | 8.4 | 2.47 | 2.3 | 1.25 | 4.0 | 8.0 | Q3 |
| SN74LVC1G17DCKT | SC70 | DCK | 5 | 250 | 178.0 | 9.0 | 2.4 | 2.5 | 1.2 | 4.0 | 8.0 | Q3 |
| SN74LVC1G17DCKTG4 | SC70 | DCK | 5 | 250 | 178.0 | 9.2 | 2.4 | 2.4 | 1.22 | 4.0 | 8.0 | Q3 |
| SN74LVC1G17DPWR | X2SON | DPW | 5 | 3000 | 178.0 | 8.4 | 0.91 | 0.91 | 0.5 | 2.0 | 8.0 | Q3 |
| SN74LVC1G17DRLR | SOT-5X3 | DRL | 5 | 4000 | 180.0 | 8.4 | 1.98 | 1.78 | 0.69 | 4.0 | 8.0 | Q3 |
| SN74LVC1G17DRYR | SON | DRY | 6 | 5000 | 180.0 | 9.5 | 1.15 | 1.6 | 0.75 | 4.0 | 8.0 | Q1 |
| SN74LVC1G17DRYRG4 | SON | DRY | 6 | 5000 | 180.0 | 9.5 | 1.15 | 1.6 | 0.75 | 4.0 | 8.0 | Q1 |
| SN74LVC1G17DSFR | SON | DSF | 6 | 5000 | 180.0 | 9.5 | 1.16 | 1.16 | 0.5 | 4.0 | 8.0 | Q2 |

| Device | Package Type | Package Drawing | Pins | SPQ | Reel Diameter (mm) | Reel Width W1 (mm) | A0 (mm) | B0 (mm) | K0 (mm) | P1 (mm) | W (mm) | Pin1 Quadrant |
|---|---|---|---|---|---|---|---|---|---|---|---|---|
| SN74LVC1G17DSFRG4 | SON | DSF | 6 | 5000 | 180.0 | 9.5 | 1.16 | 1.16 | 0.5 | 4.0 | 8.0 | Q2 |
| SN74LVC1G17YZPR | DSBGA | YZP | 5 | 3000 | 178.0 | 9.2 | 1.02 | 1.52 | 0.63 | 4.0 | 8.0 | Q1 |
| SN74LVC1G17YZVR | DSBGA | YZV | 4 | 3000 | 178.0 | 9.2 | 1.0 | 1.0 | 0.63 | 4.0 | 8.0 | Q1 |

TAPE AND REEL BOX DIMENSIONS

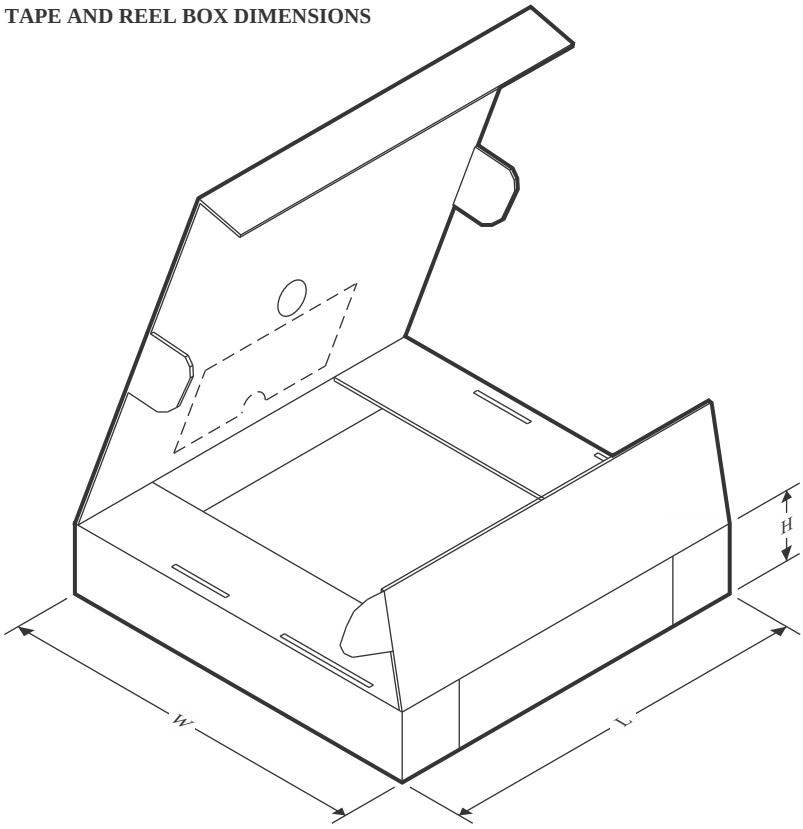


*All dimensions are nominal

| Device | Package Type | Package Drawing | Pins | SPQ | Length (mm) | Width (mm) | Height (mm) |
|---|---|---|---|---|---|---|---|
| SN74LVC1G17DBVR | SOT-23 | DBV | 5 | 3000 | 210.0 | 185.0 | 35.0 |
| SN74LVC1G17DBVRG4 | SOT-23 | DBV | 5 | 3000 | 180.0 | 180.0 | 18.0 |
| SN74LVC1G17DBVT | SOT-23 | DBV | 5 | 250 | 202.0 | 201.0 | 28.0 |
| SN74LVC1G17DBVT | SOT-23 | DBV | 5 | 250 | 180.0 | 180.0 | 18.0 |
| SN74LVC1G17DBVTG4 | SOT-23 | DBV | 5 | 250 | 180.0 | 180.0 | 18.0 |
| SN74LVC1G17DCKR | SC70 | DCK | 5 | 3000 | 180.0 | 180.0 | 18.0 |
| SN74LVC1G17DCKRG4 | SC70 | DCK | 5 | 3000 | 180.0 | 180.0 | 18.0 |
| SN74LVC1G17DCKT | SC70 | DCK | 5 | 250 | 180.0 | 180.0 | 18.0 |
| SN74LVC1G17DCKT | SC70 | DCK | 5 | 250 | 202.0 | 201.0 | 28.0 |
| SN74LVC1G17DCKT | SC70 | DCK | 5 | 250 | 180.0 | 180.0 | 18.0 |
| SN74LVC1G17DCKTG4 | SC70 | DCK | 5 | 250 | 180.0 | 180.0 | 18.0 |
| SN74LVC1G17DPWR | X2SON | DPW | 5 | 3000 | 205.0 | 200.0 | 33.0 |
| SN74LVC1G17DRLR | SOT-5X3 | DRL | 5 | 4000 | 202.0 | 201.0 | 28.0 |
| SN74LVC1G17DRYR | SON | DRY | 6 | 5000 | 184.0 | 184.0 | 19.0 |
| SN74LVC1G17DRYRG4 | SON | DRY | 6 | 5000 | 184.0 | 184.0 | 19.0 |
| SN74LVC1G17DSFR | SON | DSF | 6 | 5000 | 184.0 | 184.0 | 19.0 |
| SN74LVC1G17DSFRG4 | SON | DSF | 6 | 5000 | 184.0 | 184.0 | 19.0 |
| SN74LVC1G17YZPR | DSBGA | YZP | 5 | 3000 | 220.0 | 220.0 | 35.0 |

| Device | Package Type | Package Drawing | Pins | SPQ | Length (mm) | Width (mm) | Height (mm) |
|---|---|---|---|---|---|---|---|
| SN74LVC1G17YZVR | DSBGA | YZV | 4 | 3000 | 220.0 | 220.0 | 35.0 |

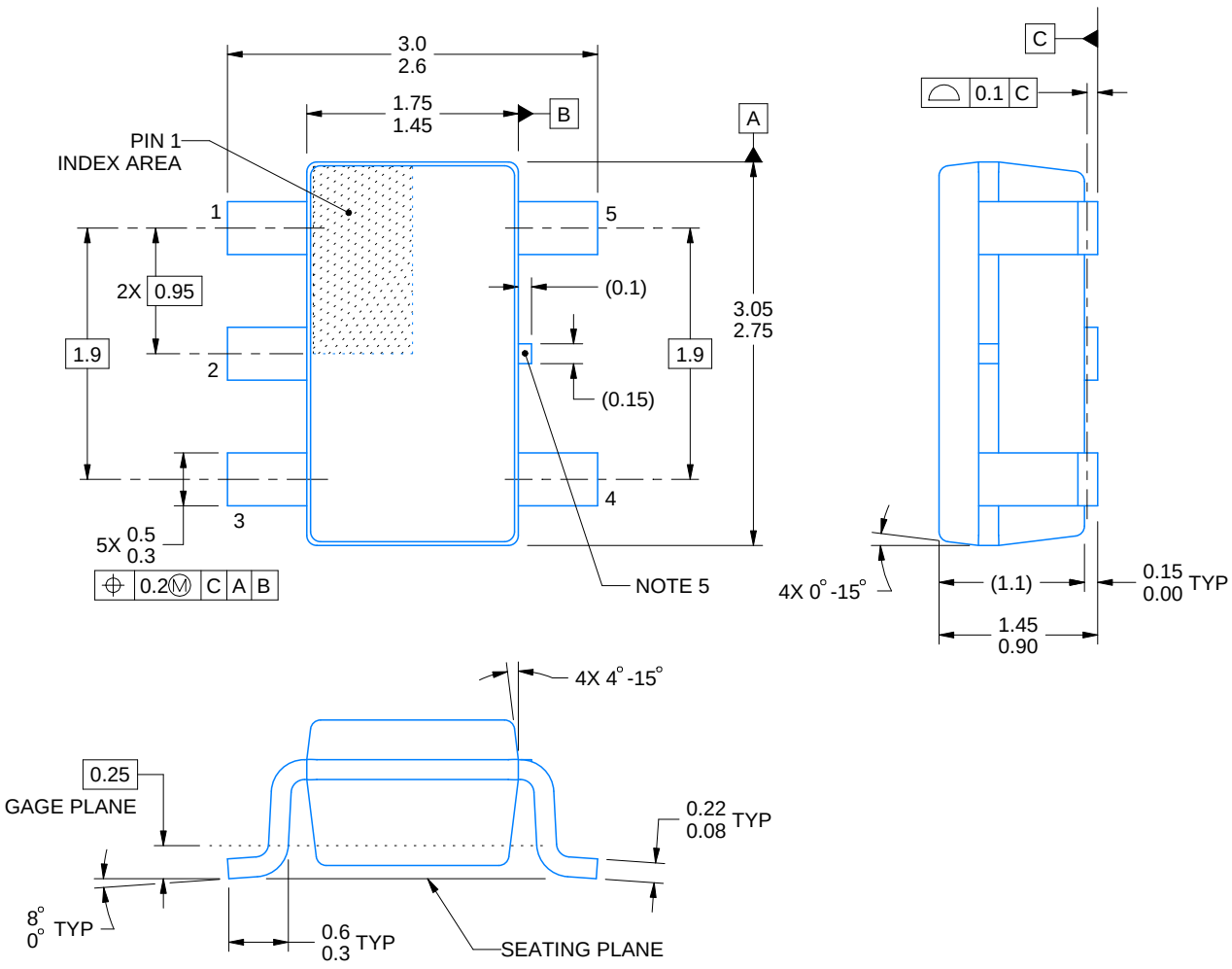


4214839/K 08/2024

NOTES:

1. All linear dimensions are in millimeters. Any dimensions in parenthesis are for reference only. Dimensioning and tolerancing per ASME Y14.5M.
2. This drawing is subject to change without notice.
3. Refernce JEDEC MO-178.
4. Body dimensions do not include mold flash, protrusions, or gate burrs. Mold flash, protrusions, or gate burrs shall not exceed 0.25 mm per side.
5. Support pin may differ or may not be present.

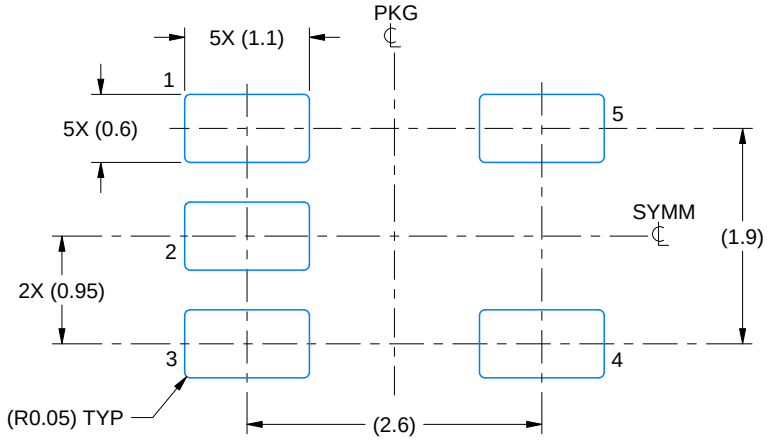


LAND PATTERN EXAMPLE
EXPOSED METAL SHOWN
SCALE:15X

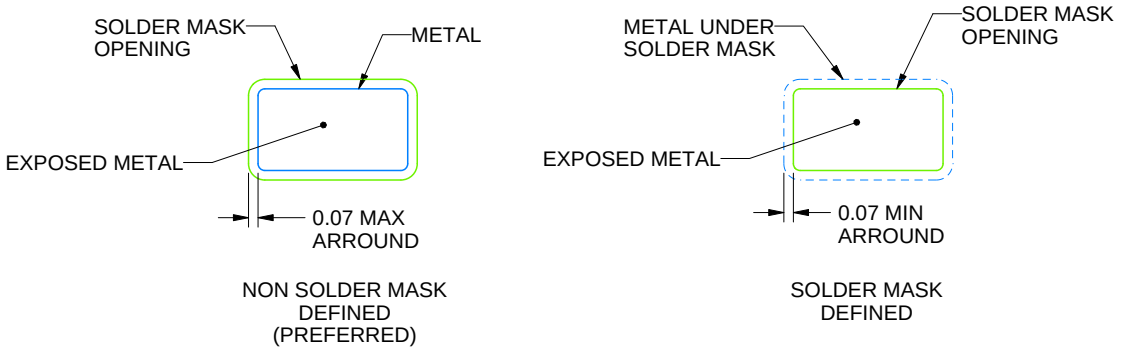


SOLDER MASK DETAILS

4214839/K 08/2024

NOTES: (continued)

6. Publication IPC-7351 may have alternate designs.
7. Solder mask tolerances between and around signal pads can vary based on board fabrication site.

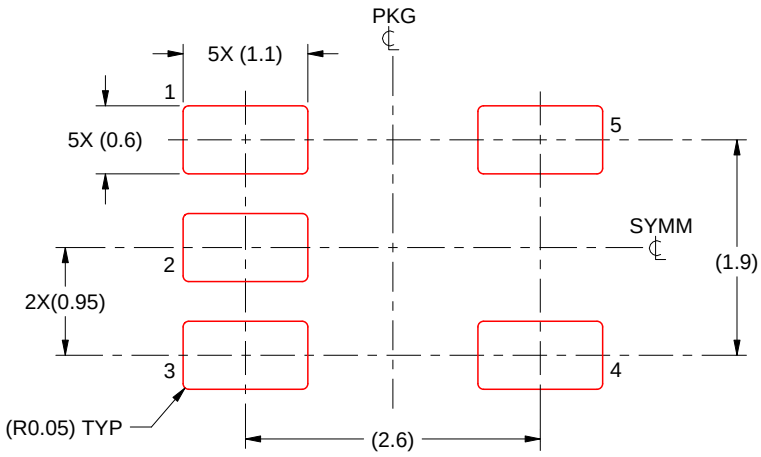


SOLDER PASTE EXAMPLE
BASED ON 0.125 mm THICK STENCIL
SCALE:15X

4214839/K 08/2024

NOTES: (continued)

8. Laser cutting apertures with trapezoidal walls and rounded corners may offer better paste release. IPC-7525 may have alternate design recommendations.
9. Board assembly site may have different recommendations for stencil design.

Images above are just a representation of the package family, actual package may vary.
Refer to the product data sheet for package details.

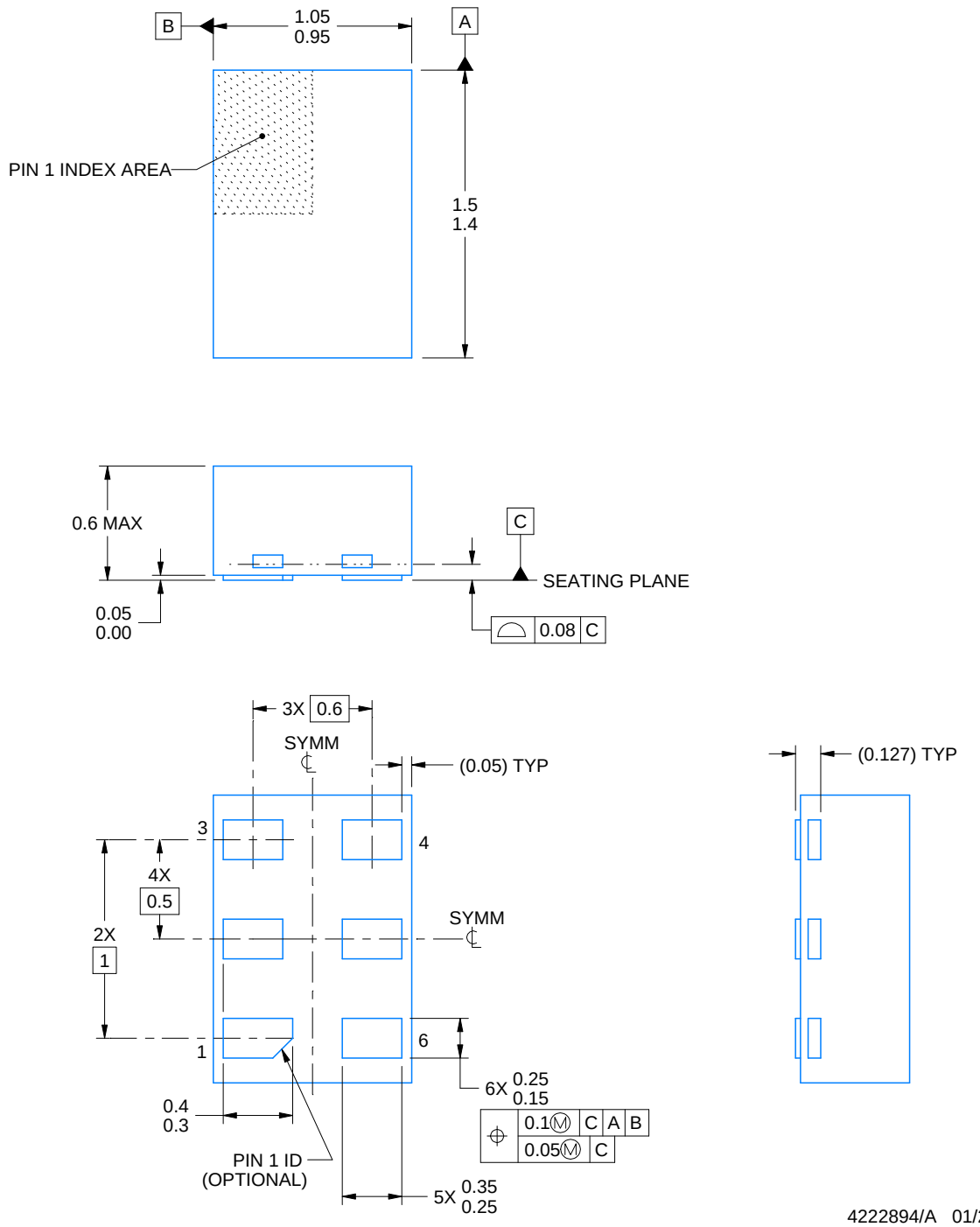


NOTES:

1. All linear dimensions are in millimeters. Any dimensions in parenthesis are for reference only. Dimensioning and tolerancing per ASME Y14.5M.
2. This drawing is subject to change without notice.

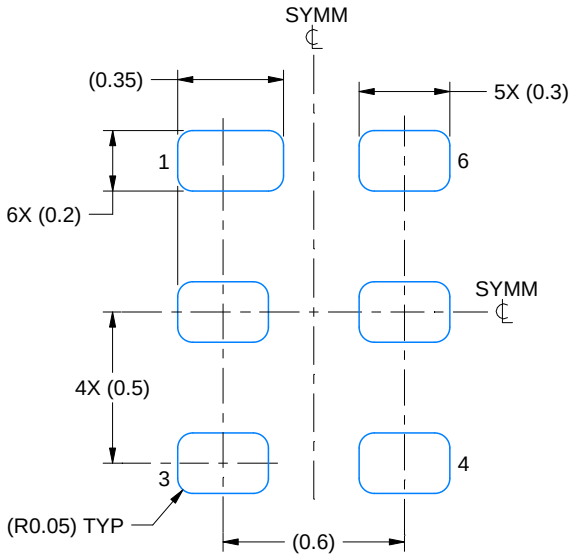


LAND PATTERN EXAMPLE
1:1 RATIO WITH PKG SOLDER PADS
EXPOSED METAL SHOWN
SCALE:40X

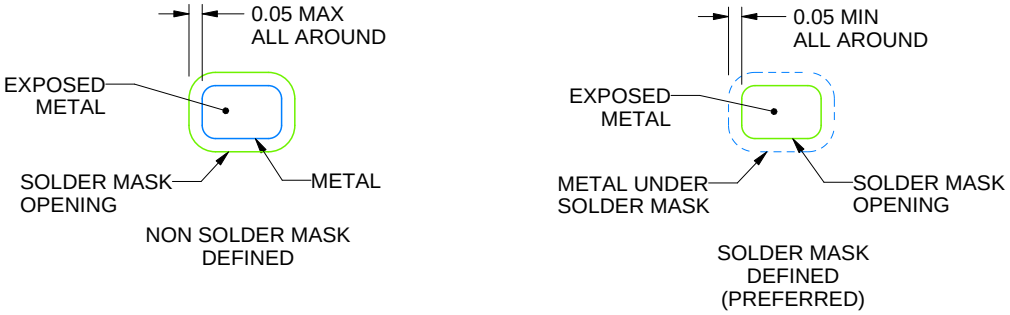


SOLDER MASK DETAILS

4222894/A 01/2018

NOTES: (continued)

3. For more information, see QFN/SON PCB application report in literature No. SLUA271 (www.ti.com/lit/slua271).

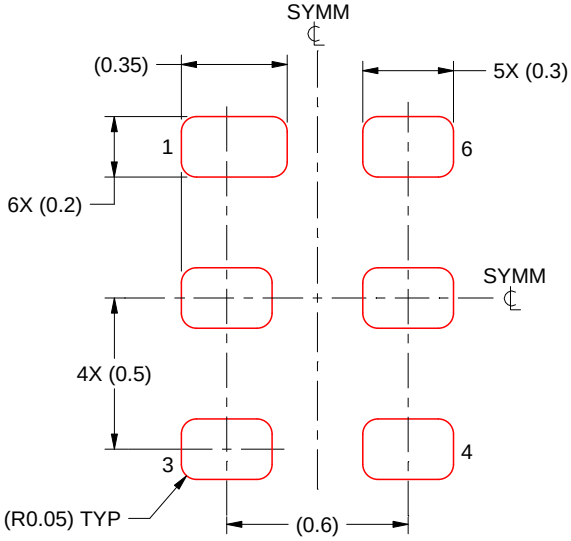


SOLDER PASTE EXAMPLE
BASED ON 0.075 - 0.1 mm THICK STENCIL
SCALE:40X

4222894/A 01/2018

NOTES: (continued)

4. Laser cutting apertures with trapezoidal walls and rounded corners may offer better paste release. IPC-7525 may have alternate design recommendations.

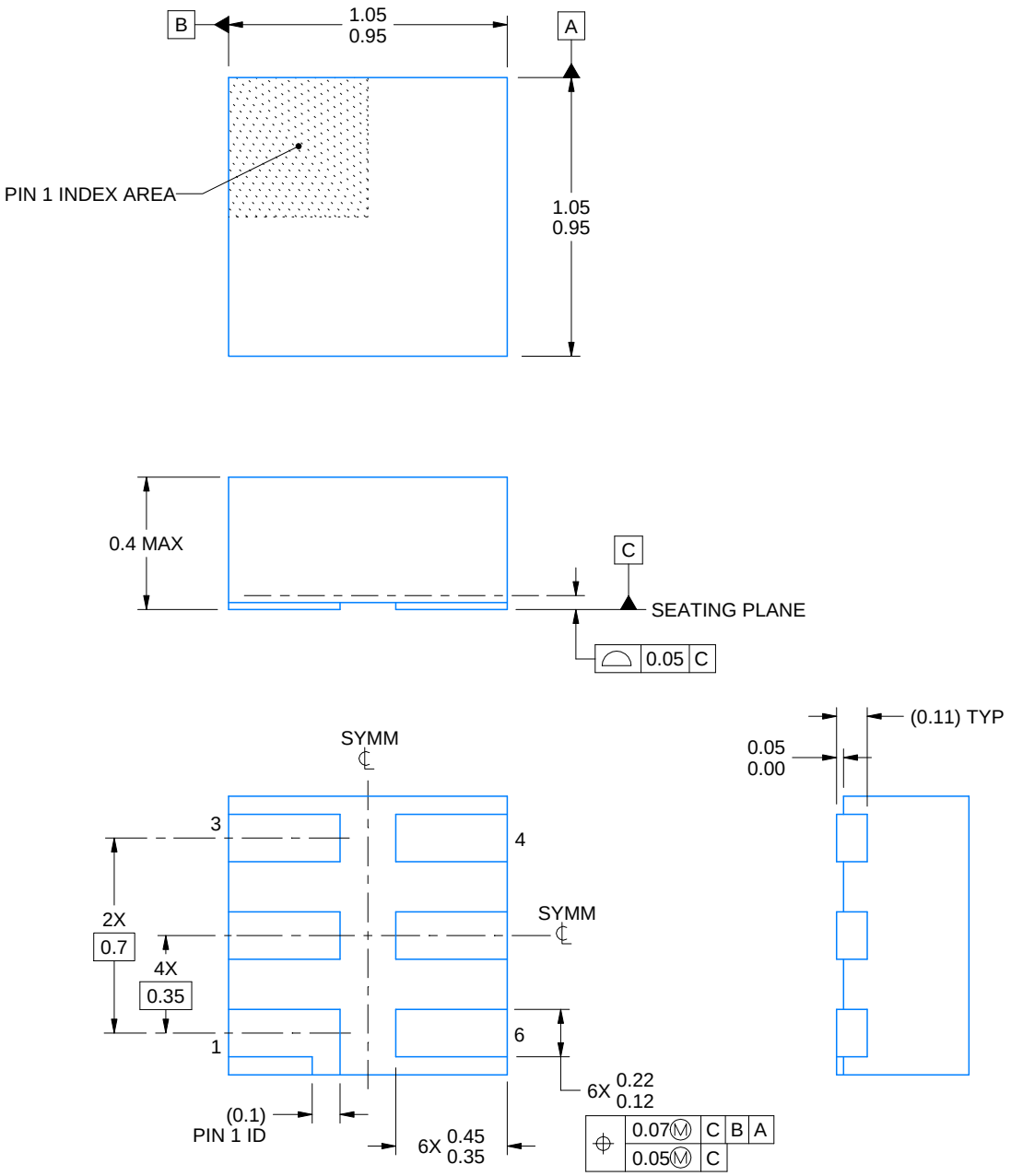


4220597/B 06/2022

NOTES:

1. All linear dimensions are in millimeters. Any dimensions in parenthesis are for reference only. Dimensioning and tolerancing per ASME Y14.5M.
2. This drawing is subject to change without notice.
3. Reference JEDEC registration MO-287, variation X2AAF.

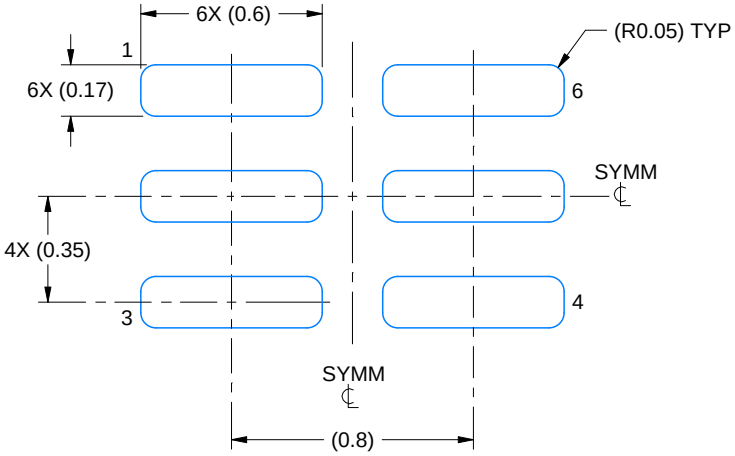


LAND PATTERN EXAMPLE
EXPOSED METAL SHOWN
SCALE:40X

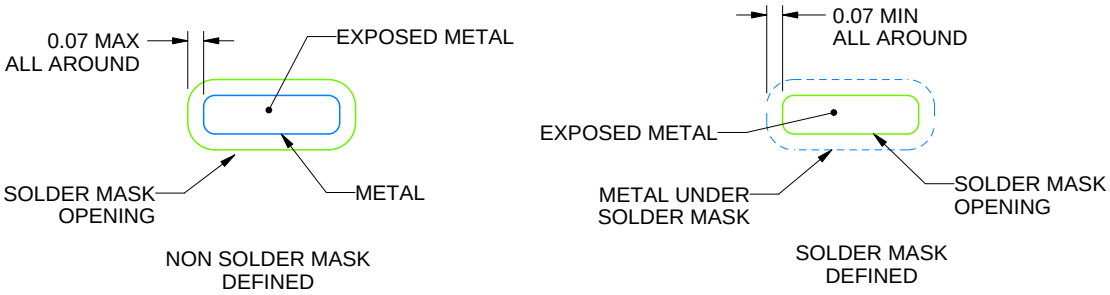


SOLDER MASK DETAILS

4220597/B 06/2022

NOTES: (continued)

4. For more information, see Texas Instruments literature number SLUA271 (www.ti.com/lit/slua271).

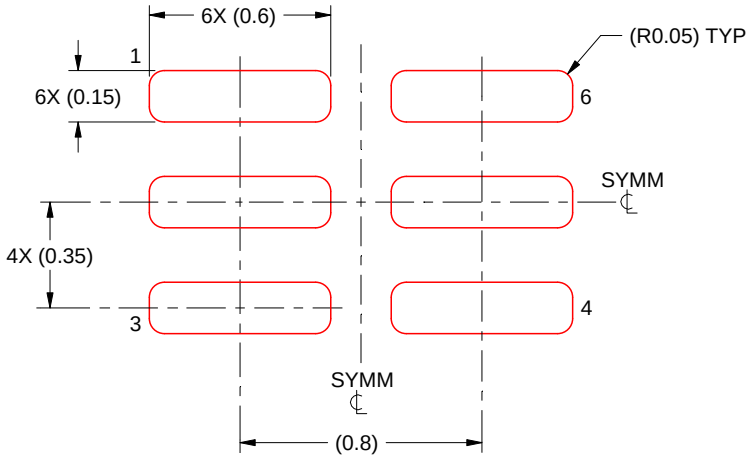


SOLDER PASTE EXAMPLE
BASED ON 0.09 mm THICK STENCIL

PRINTED SOLDER COVERAGE BY AREA UNDER PACKAGE
SCALE:40X

4220597/B 06/2022

4. Laser cutting apertures with trapezoidal walls and rounded corners may offer better paste release. IPC-7525 may have alternate design recommendations.

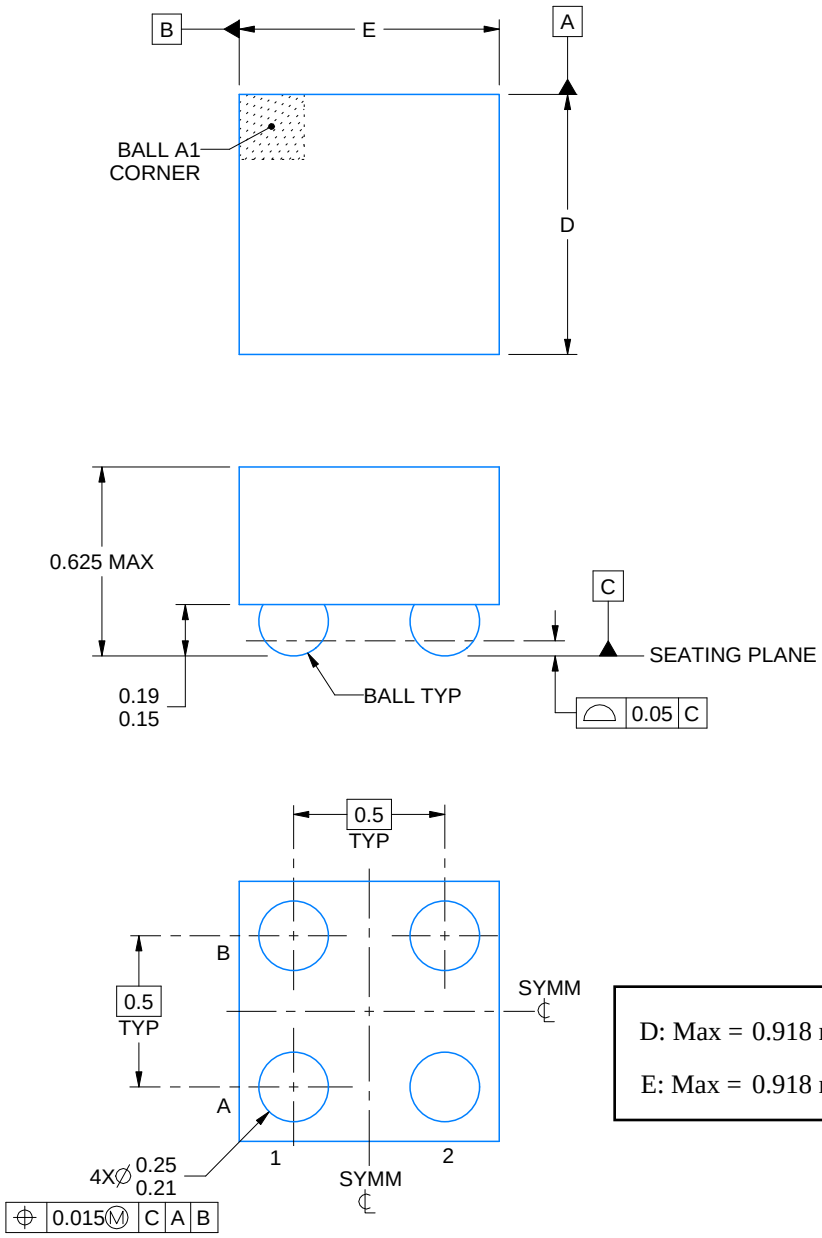


D: Max = 0.918 mm, Min =0.858 mm

E: Max = 0.918 mm, Min =0.858 mm

4219477/A 05/2017

NOTES:

1. All linear dimensions are in millimeters. Any dimensions in parenthesis are for reference only. Dimensioning and tolerancing per ASME Y14.5M.
2. This drawing is subject to change without notice.

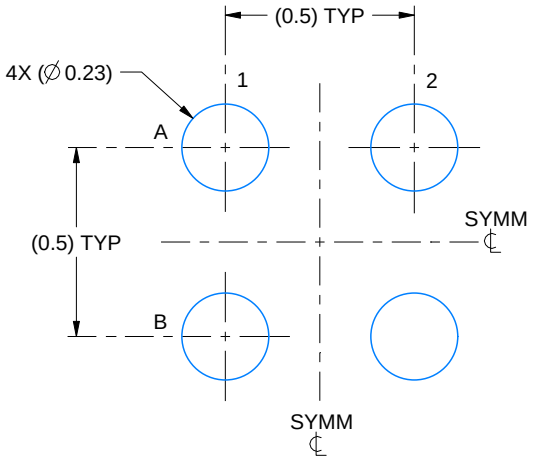


LAND PATTERN EXAMPLE
EXPOSED METAL SHOWN
SCALE:50X

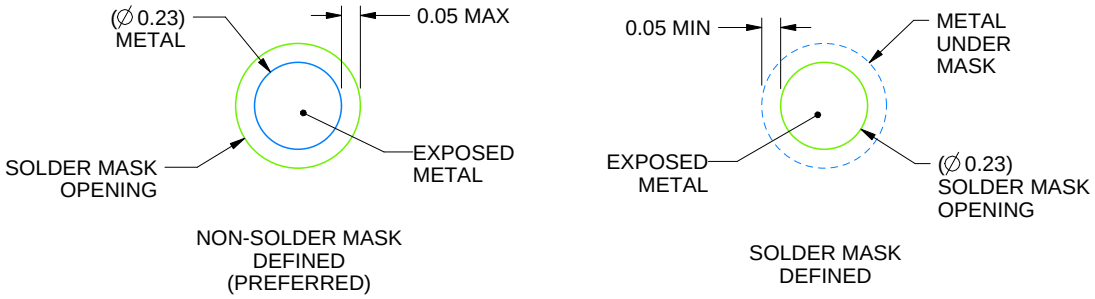


SOLDER MASK DETAILS
NOT TO SCALE

4219477/A 05/2017

NOTES: (continued)

3. Final dimensions may vary due to manufacturing tolerance considerations and also routing constraints.
   Refer to Texas Instruments Literature No. SNVA009 (www.ti.com/lit/snva009).

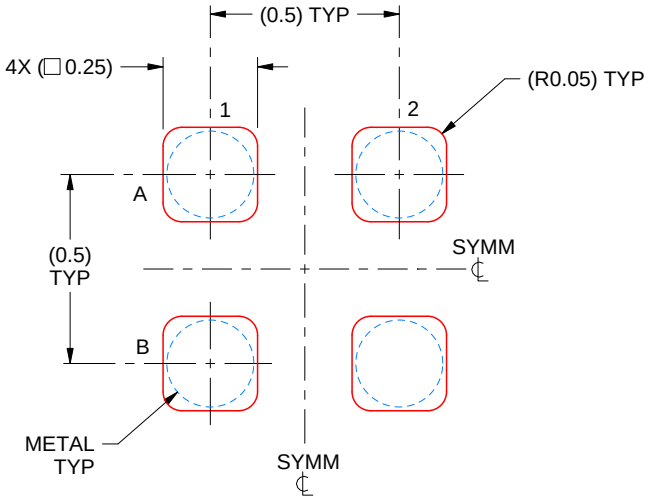


SOLDER PASTE EXAMPLE
BASED ON 0.1 mm THICK STENCIL
SCALE:50X

4219477/A 05/2017

NOTES: (continued)

4. Laser cutting apertures with trapezoidal walls and rounded corners may offer better paste release.

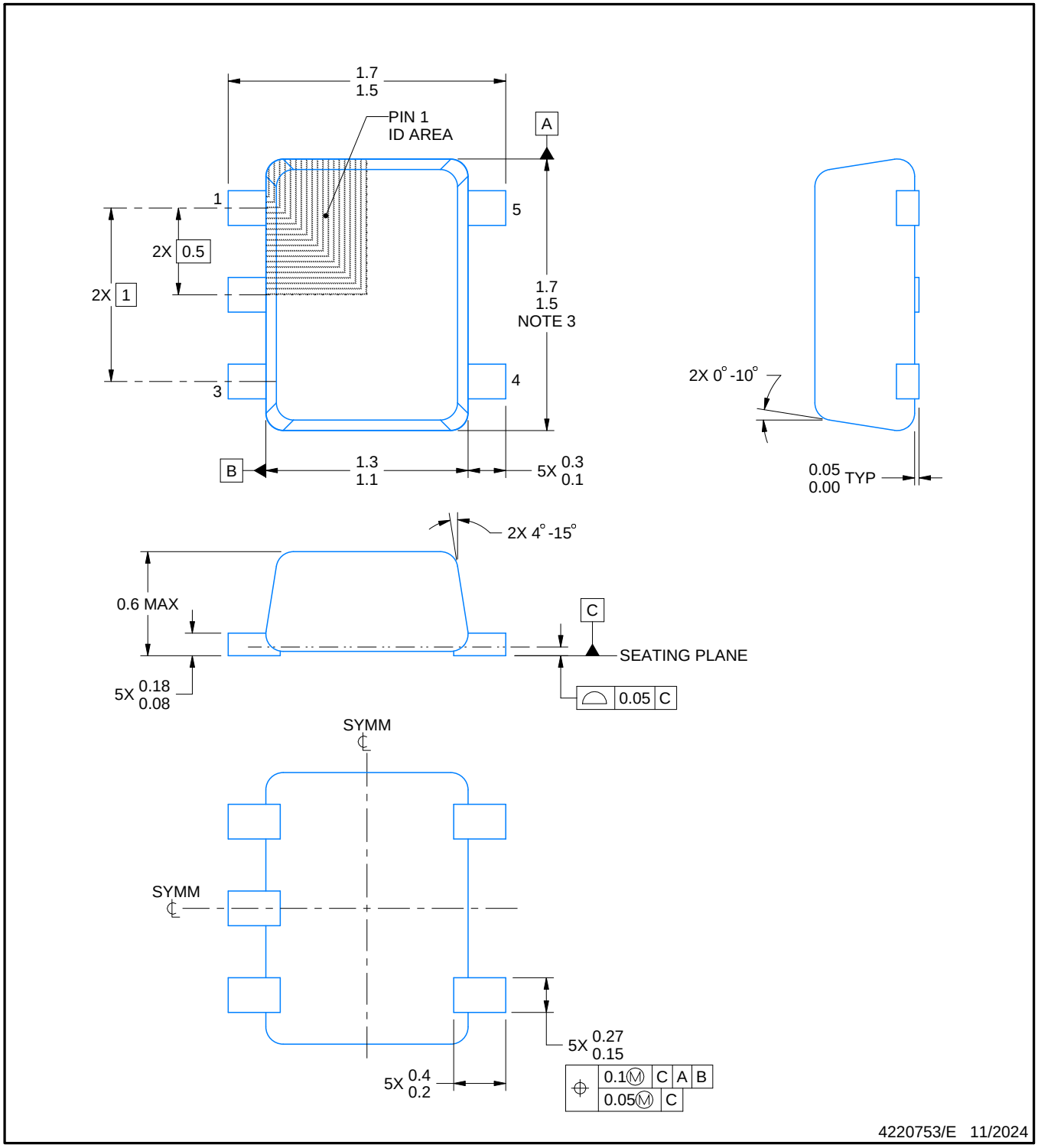


NOTES:

1. All linear dimensions are in millimeters. Any dimensions in parenthesis are for reference only. Dimensioning and tolerancing per ASME Y14.5M.
2. This drawing is subject to change without notice.
3. This dimension does not include mold flash, protrusions, or gate burrs. Mold flash, protrusions, or gate burrs shall not exceed 0.15 mm per side.
4. Reference JEDEC registration MO-293 Variation UAAD-1

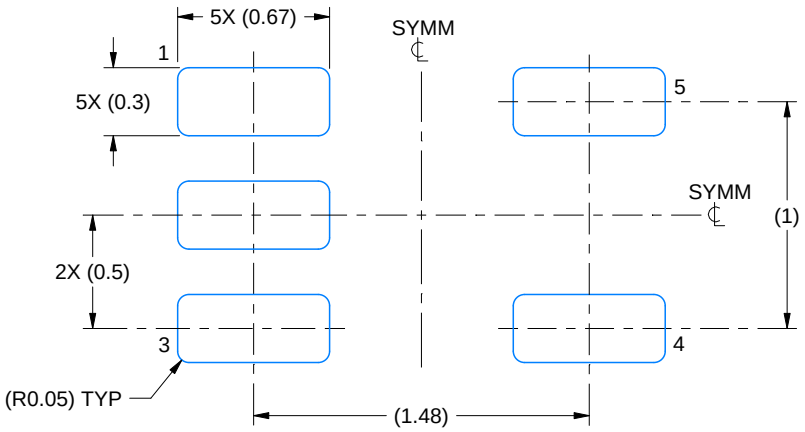


LAND PATTERN EXAMPLE
SCALE:30X

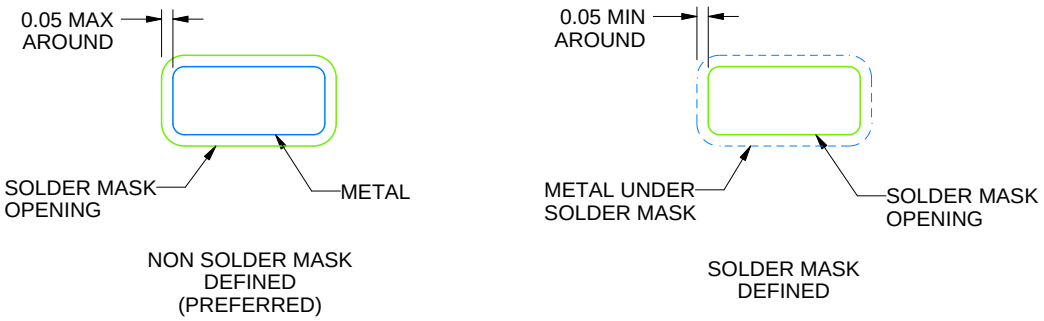


SOLDERMASK DETAILS

4220753/E 11/2024

NOTES: (continued)

5. Publication IPC-7351 may have alternate designs.
6. Solder mask tolerances between and around signal pads can vary based on board fabrication site.

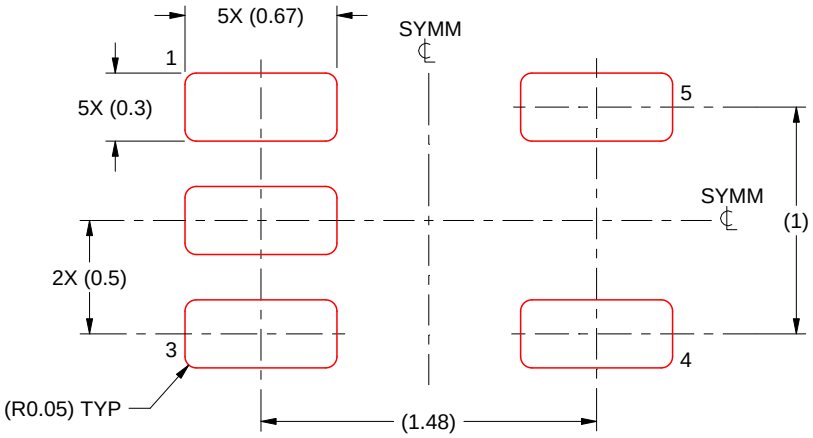


SOLDER PASTE EXAMPLE
BASED ON 0.1 mm THICK STENCIL
SCALE:30X

4220753/E 11/2024

NOTES: (continued)

7. Laser cutting apertures with trapezoidal walls and rounded corners may offer better paste release. IPC-7525 may have alternate design recommendations.
8. Board assembly site may have different recommendations for stencil design.

# DPW 5 X2SON - 0.4 mm max height

PLASTIC SMALL OUTLINE - NO LEAD

Images above are just a representation of the package family, actual package may vary.
Refer to the product data sheet for package details.

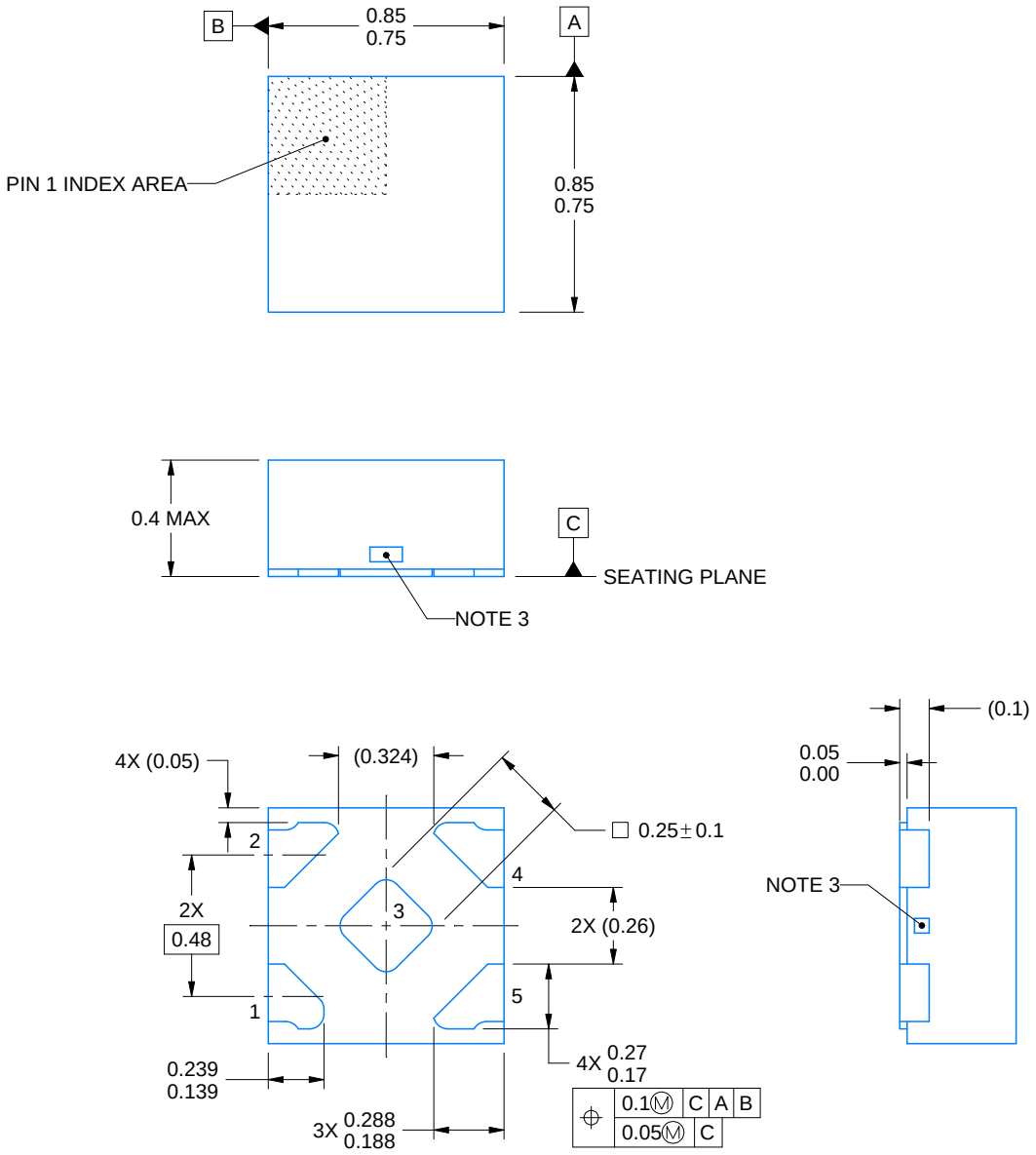


4223102/D 03/2022

NOTES:

1. All linear dimensions are in millimeters. Any dimensions in parenthesis are for reference only. Dimensioning and tolerancing per ASME Y14.5M.
2. This drawing is subject to change without notice.
3. The size and shape of this feature may vary.

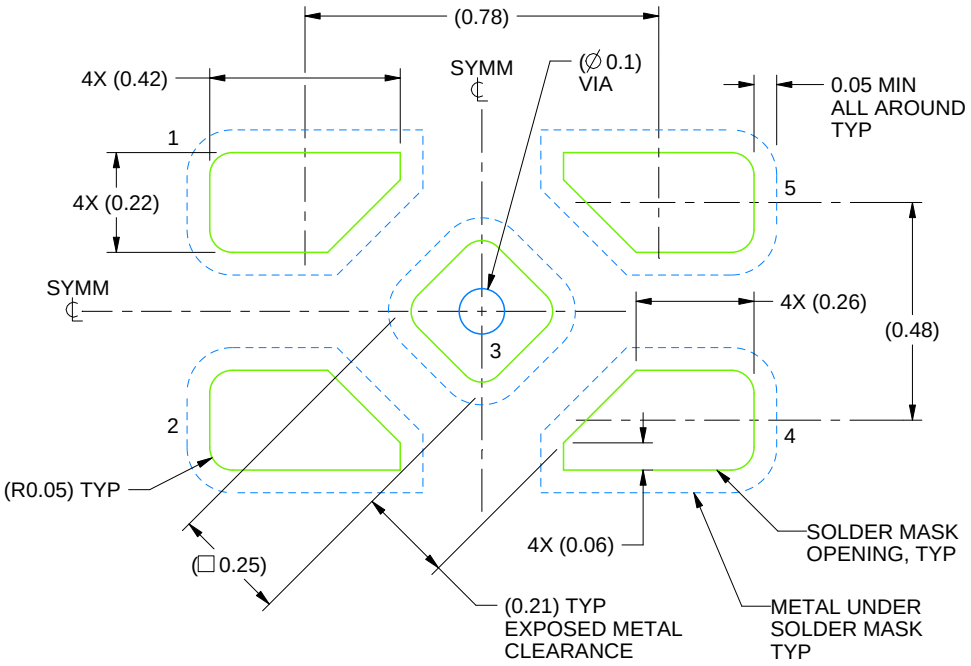


LAND PATTERN EXAMPLE
SOLDER MASK DEFINED
SCALE:60X

4223102/D 03/2022

NOTES: (continued)

4. This package is designed to be soldered to a thermal pad on the board. For more information, refer to QFN/SON PCB application note in literature No. SLUA271 (www.ti.com/lit/slua271).

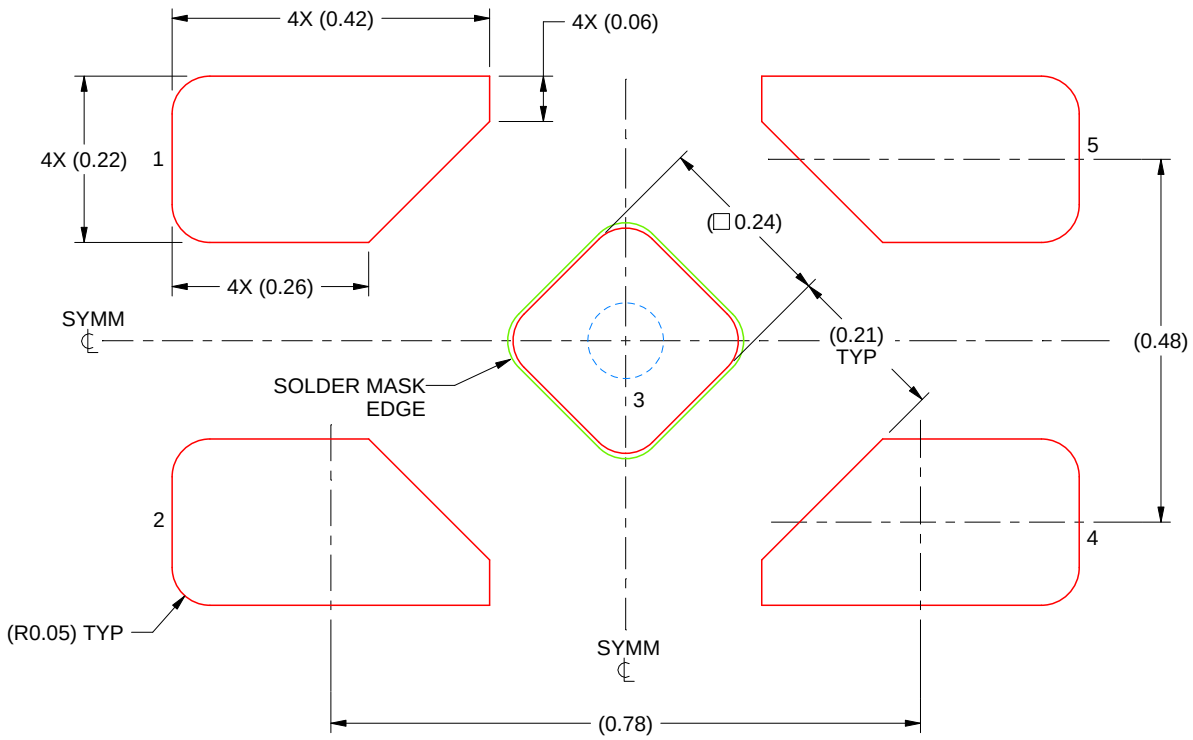


SOLDER PASTE EXAMPLE
BASED ON 0.1 mm THICK STENCIL

EXPOSED PAD 3
92% PRINTED SOLDER COVERAGE BY AREA UNDER PACKAGE
SCALE:100X

4223102/D 03/2022

NOTES: (continued)

5. Laser cutting apertures with trapezoidal walls and rounded corners may offer better paste release. IPC-7525 may have alternate design recommendations.

## YEA (R–XBGA–N5) DIE–SIZE BALL GRID ARRAY

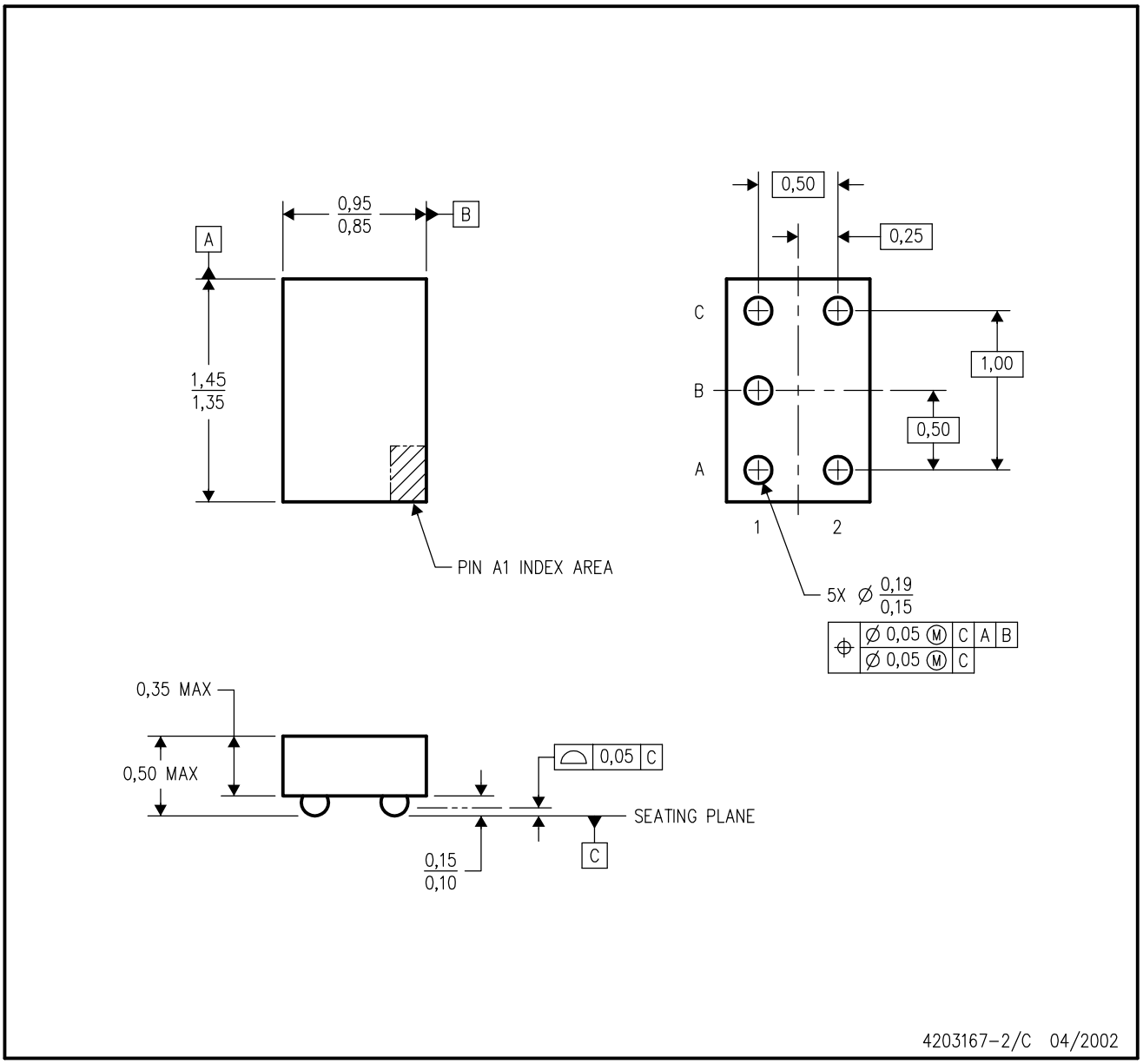


NOTES:
A. All linear dimensions are in millimeters.
B. This drawing is subject to change without notice.
C. NanoStar™ package configuration.
D. Package complies to JEDEC MO–211 variation EA.
E. This package is tin–lead (SnPb). Refer to the 5 YZA package (drawing 4204151) for lead–free.

**NanoStar is a trademark of Texas Instruments.**

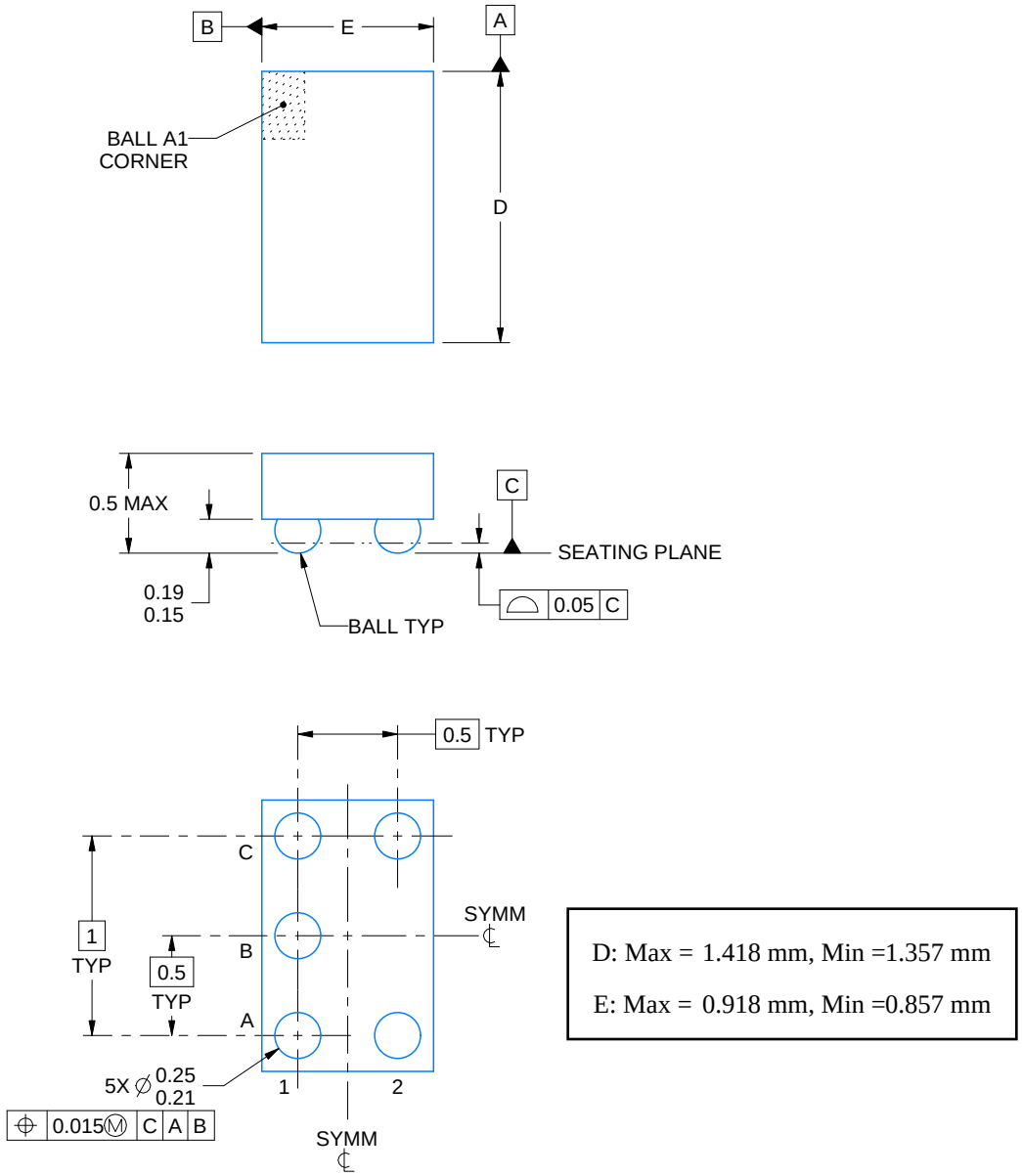


NOTES:

1. All linear dimensions are in millimeters. Any dimensions in parenthesis are for reference only. Dimensioning and tolerancing per ASME Y14.5M.
2. This drawing is subject to change without notice.

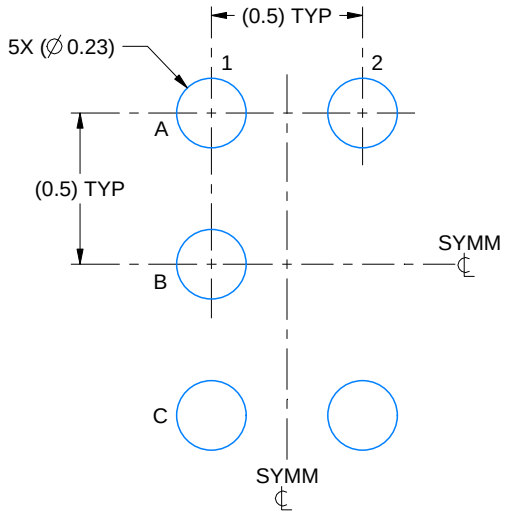


LAND PATTERN EXAMPLE
SCALE:40X

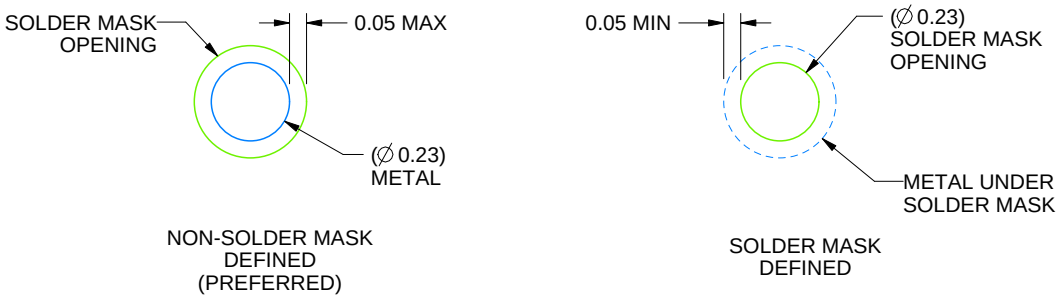


SOLDER MASK DETAILS
NOT TO SCALE

4219492/A 05/2017

NOTES: (continued)

3. Final dimensions may vary due to manufacturing tolerance considerations and also routing constraints. For more information, see Texas Instruments literature number SNVA009 (www.ti.com/lit/snva009).

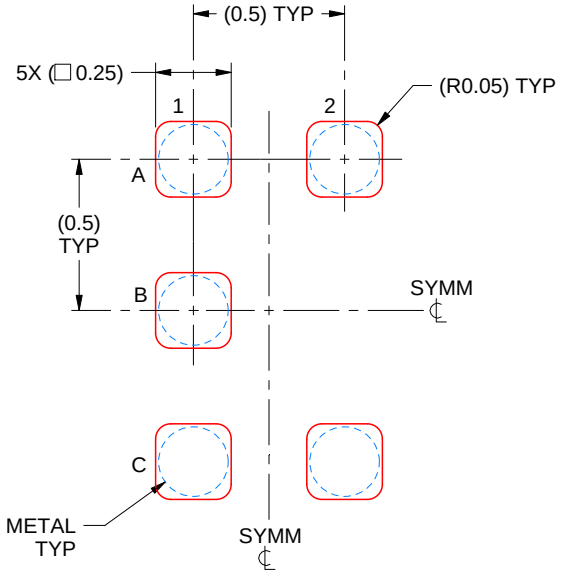


SOLDER PASTE EXAMPLE
BASED ON 0.1 mm THICK STENCIL
SCALE:40X

4219492/A 05/2017

NOTES: (continued)

4. Laser cutting apertures with trapezoidal walls and rounded corners may offer better paste release.

YZV (S-XBGA-N4) DIE-SIZE BALL GRID ARRAY

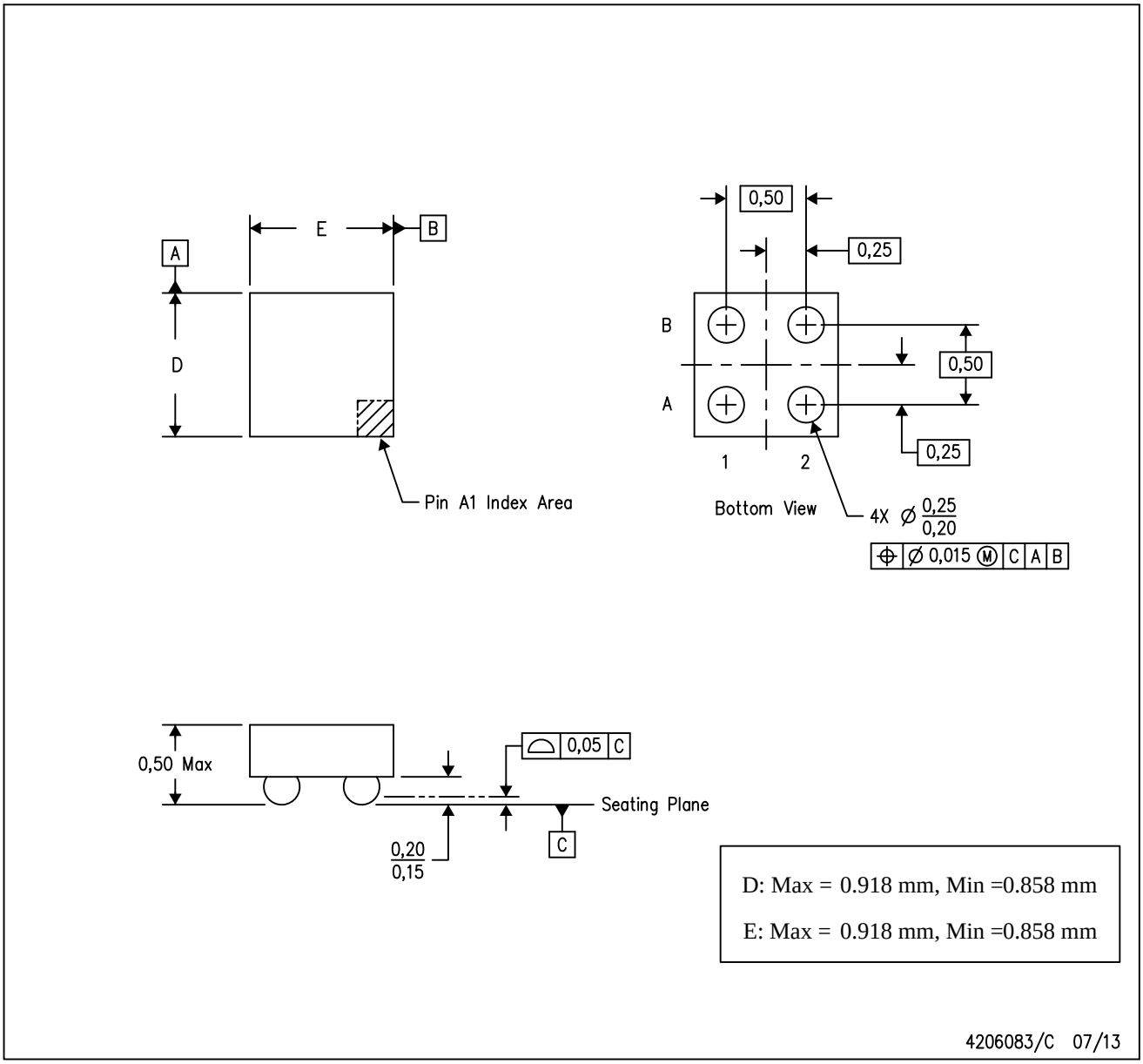


NOTES:
A. All linear dimensions are in millimeters. Dimensioning and tolerancing per ASME Y14.5M-1994.
B. This drawing is subject to change without notice.
C. NanoFree™ package configuration.

NanoFree is a trademark of Texas Instruments.

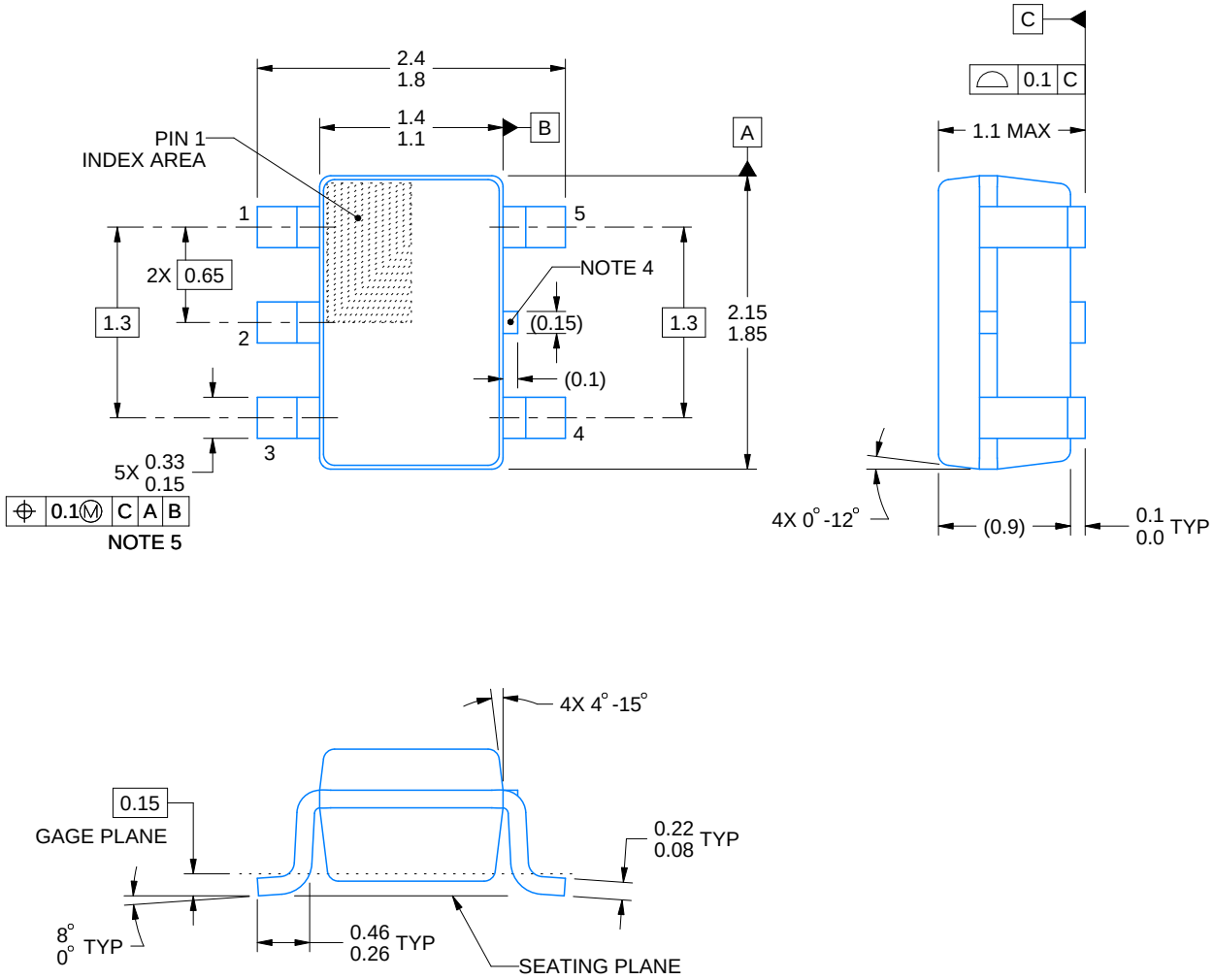


NOTES:

1. All linear dimensions are in millimeters. Any dimensions in parenthesis are for reference only. Dimensioning and tolerancing per ASME Y14.5M.
2. This drawing is subject to change without notice.
3. Refernce JEDEC MO-203.
4. Support pin may differ or may not be present.
5. Lead width does not comply with JEDEC.
6. Body dimensions do not include mold flash, protrusions, or gate burrs. Mold flash, protrusions, or gate burrs shall not exceed 0.25mm per side

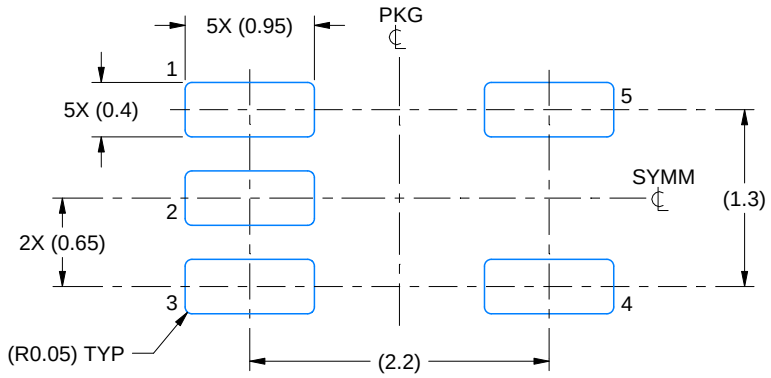


LAND PATTERN EXAMPLE
EXPOSED METAL SHOWN
SCALE:18X

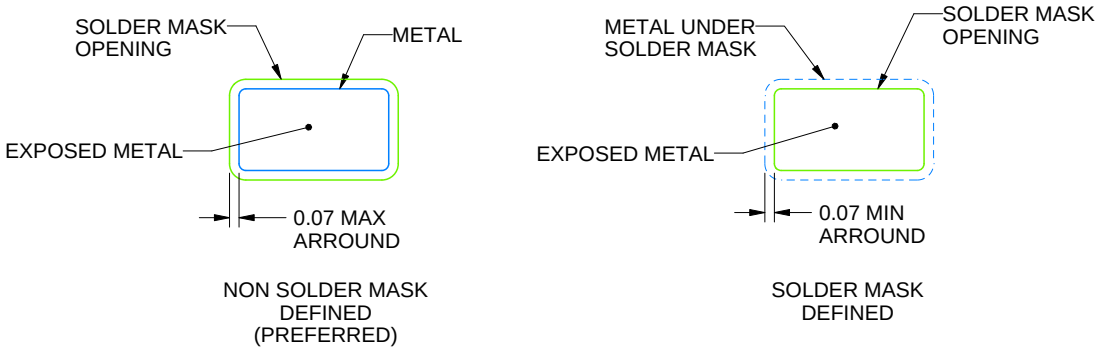


SOLDER MASK DETAILS

4214834/G 11/2024

NOTES: (continued)

7. Publication IPC-7351 may have alternate designs.
8. Solder mask tolerances between and around signal pads can vary based on board fabrication site.

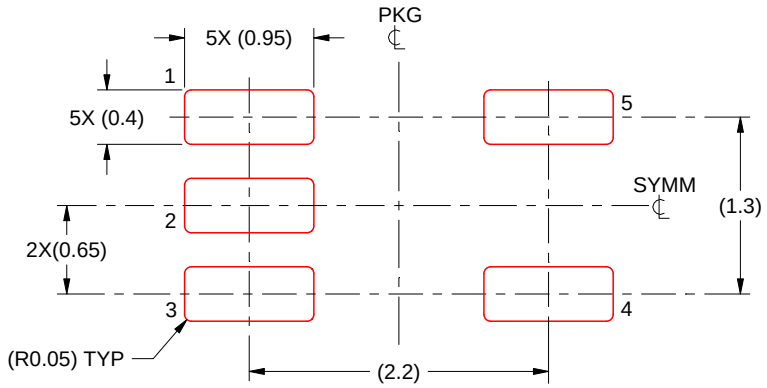


SOLDER PASTE EXAMPLE
BASED ON 0.125 THICK STENCIL
SCALE:18X

4214834/G 11/2024

NOTES: (continued)

9. Laser cutting apertures with trapezoidal walls and rounded corners may offer better paste release. IPC-7525 may have alternate design recommendations.
10. Board assembly site may have different recommendations for stencil design.

## YEP (R–XBGA–N5) DIE–SIZE BALL GRID ARRAY

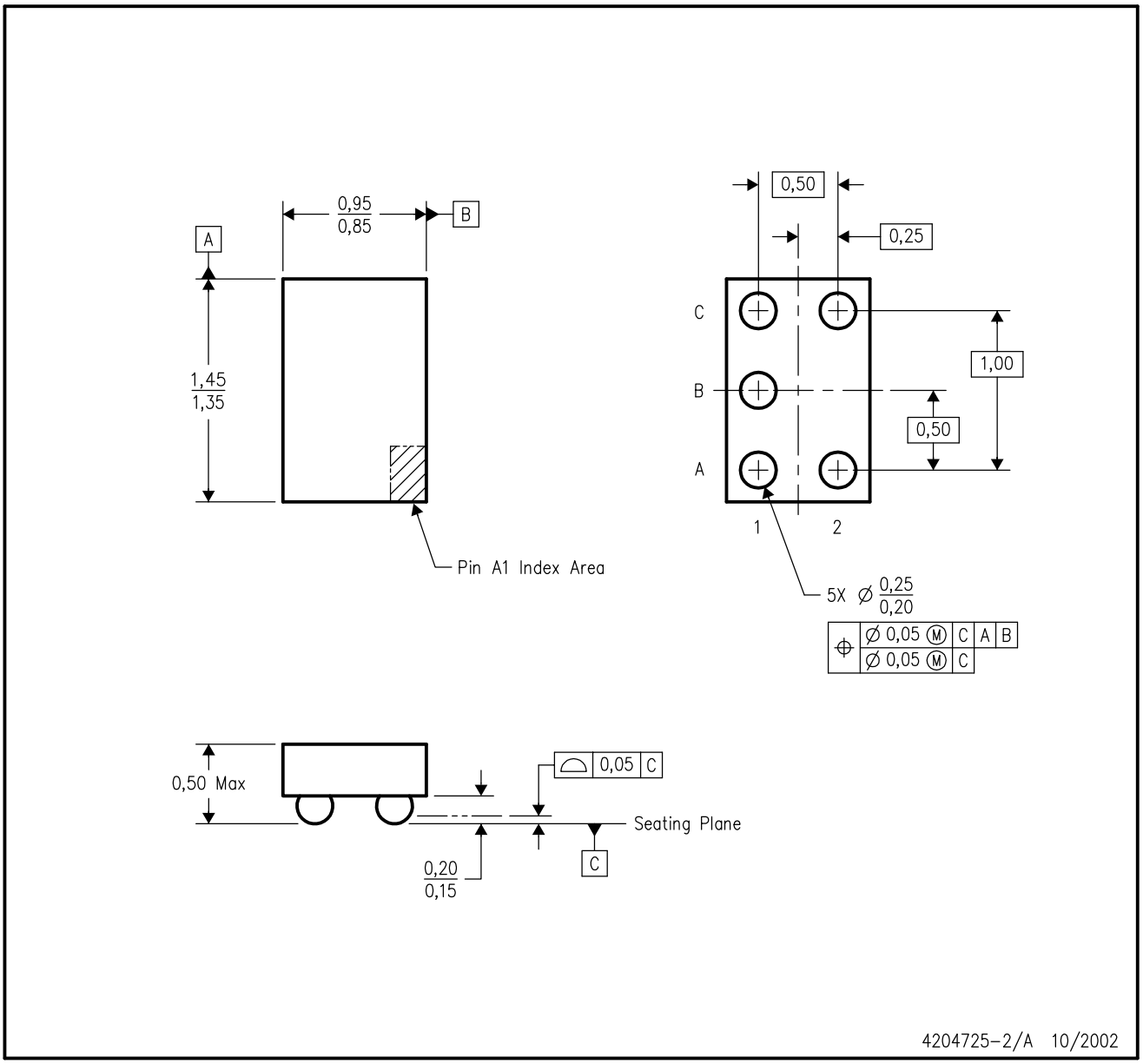


NOTES:
A. All linear dimensions are in millimeters.
B. This drawing is subject to change without notice.
C. NanoStar™ package configuration.
D. This package is tin–lead (SnPb). Refer to the 5 YZP package (drawing 4204741) for lead–free.

**NanoStar is a trademark of Texas Instruments.**

## YZA (R–XBGA–N5) DIE–SIZE BALL GRID ARRAY

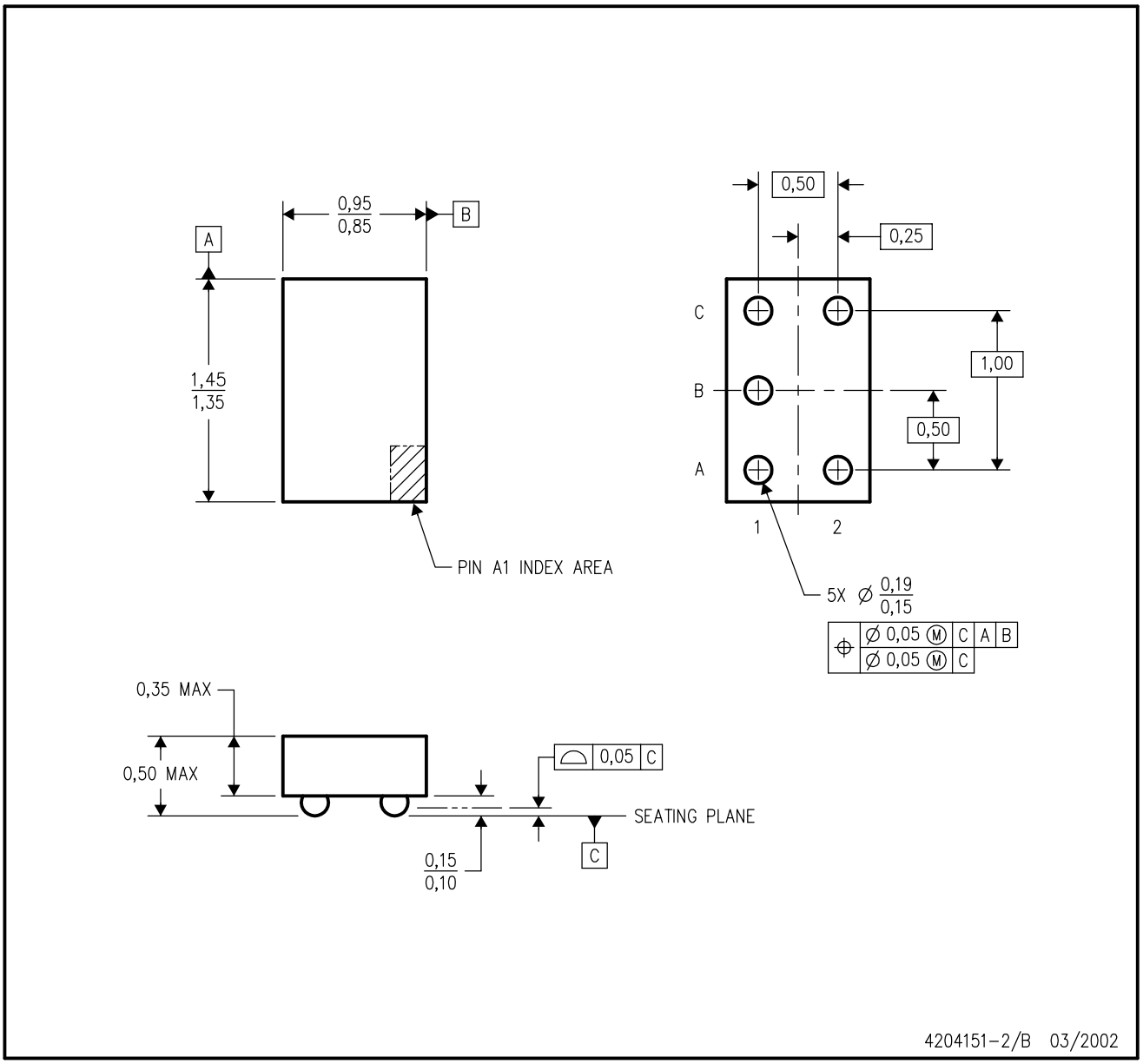


NOTES:
A. All linear dimensions are in millimeters.
B. This drawing is subject to change without notice.
C. NanoFree™ package configuration.
D. Package complies to JEDEC MO–211 variation EA.
E. This package is lead–free. Refer to the 5 YEA package (drawing 4203167) for tin–lead (SnPb).

**NanoFree is a trademark of Texas Instruments.**

# 重要なお知らせと免責事項

テキサス· インスツルメンツは、技術データと信頼性データ (データシートを含みます)、設計リソース (リファレンス デザインを含みます)、アプリケーションや設計に関する各種アドバイス、Web ツール、安全性情報、その他のリソースを、欠陥が存在する可能性のある「現状のまま」提供しており、商品性および特定目的に対する適合性の黙示保証、第三者の知的財産権の非侵害保証を含むいかなる保証も、明示的または黙示的にかかわらず拒否します。

これらのリソースは、 テキサス· インスツルメンツ製品を使用する設計の経験を積んだ開発者への提供を意図したものです。(1) お客様のアプリケーションに適した テキサス· インスツルメンツ製品の選定、(2) お客様のアプリケーションの設計、検証、試験、(3) お客様のアプリケーションに該当する各種規格や、その他のあらゆる安全性、セキュリティ、規制、または他の要件への確実な適合に関する責任を、お客様のみが単独で負うものとします。

上記の各種リソースは、予告なく変更される可能性があります。これらのリソースは、リソースで説明されている テキサス· インスツルメンツ製品を使用するアプリケーションの開発の目的でのみ、 テキサス· インスツルメンツはその使用をお客様に許諾します。これらのリソースに関して、他の目的で複製することや掲載することは禁止されています。 テキサス· インスツルメンツや第三者の知的財産権のライセンスが付与されている訳ではありません。お客様は、これらのリソースを自身で使用した結果発生するあらゆる申し立て、損害、費用、損失、責任について、 テキサス· インスツルメンツおよびその代理人を完全に補償するものとし、 テキサス· インスツルメンツは一切の責任を拒否します。

テキサス· インスツルメンツの製品は、 テキサス· インスツルメンツの販売条件、または ti.com やかかる テキサス· インスツルメンツ製品の関連資料などのいずれかを通じて提供する適用可能な条項の下で提供されています。 テキサス· インスツルメンツがこれらのリソースを提供することは、適用される テキサス· インスツルメンツの保証または他の保証の放棄の拡大や変更を意味するものではありません。

お客様がいかなる追加条項または代替条項を提案した場合でも、 テキサス· インスツルメンツはそれらに異議を唱え、拒否します。

郵送先住所：Texas Instruments, Post Office Box 655303, Dallas, Texas 75265
Copyright © 2025, Texas Instruments Incorporated