SN74AHCT02-Q1 車載用クワッド 2 入力正論理 NOR ゲート

1 特長

- 車載アプリケーション用に AEC-Q100 認定済み:
  - デバイス温度グレード 1:-40℃～+125℃
  - デバイス HBM ESD 分類レベル 2
  - デバイス CDM ESD 分類レベル C4B
- ウェッタブル・フランク QFN (WBQA) パッケージで供給されます
- 動作範囲:4.5V～5.5V
- 低消費電力、I_{CC} の最大値 10μA
- 5V で ±8mA の出力駆動能力
- 入力は TTL 電圧互換
- JESD 17 準拠で 250mA 超のラッチアップ性能

2 アプリケーション

- デジタル信号のイネーブルまたはディスエーブル
- インジケータ LED の制御
- 通信モジュールとシステム・コントローラ間の変換

3 概要

これらのデバイスには 4 つの独立した 2 入力 NOR ゲートが内蔵されており、ブール関数 $Y = \overline{A \cdot B}$ または $Y = \overline{A + B}$ を正論理で実行します。

パッケージ情報

部品番号	パッケージ (1)	パッケージ・サイズ (1)	本体サイズ (公称)(1)
SN74AHCT02	PW (SOP、14)	5mm × 6.4mm	5mm × 4.4mm
	BQA (WQFN、14)	3mm × 2.5mm	3mm × 2.5mm

(1) 利用可能なすべてのパッケージについては、このデータシートの末尾にある注文情報を参照してください。

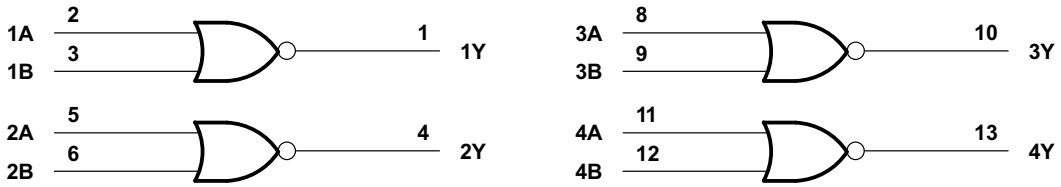

論理図 (正論理)

英語版の TI 製品についての情報を翻訳したこの資料は、製品の概要を確認する目的で便宜的に提供しているものです。該当する正式な英語版の最新情報は、www.ti.com で閲覧でき、その内容が常に優先されます。TI では翻訳の正確性および妥当性につきましては一切保証いたしません。実際の設計などの前には、必ず最新版の英語版をご参照くださいますようお願いいたします。

Table of Contents

1 特長 1
2 アプリケーション 1
3 概要 1
4 Revision History 2
5 Pin Configuration and Functions 3
6 Specifications 4
6.1 Absolute Maximum Ratings 4
6.2 ESD Ratings 4
6.3 Recommended Operating Conditions 4
6.4 Thermal Information 5
6.5 Electrical Characteristics 5
6.6 Switching Characteristics 5
6.7 Noise Characteristics 6
6.8 Operating Characteristics 6
6.9 Typical Characteristics 6
7 Parameter Measurement Information 7
8 Detailed Description 8
8.1 Overview 8
8.2 Functional Block Diagram 8
8.3 Feature Description 8
8.4 Device Functional Modes 9
9 Application and Implementation 10
9.1 Application Information 10
9.2 Typical Application 10
9.3 Power Supply Recommendations 12
9.4 Layout 12
10 Device and Documentation Support 13
10.1 ドキュメントの更新通知を受け取る方法 13
10.2 サポート・リソース 13
10.3 Trademarks 13
10.4 静電気放電に関する注意事項 13
10.5 用語集 13
11 Mechanical, Packaging, and Orderable Information 13

4 Revision History

資料番号末尾の英字は改訂を表しています。その改訂履歴は英語版に準じています。

DATE	REVISION	NOTES
May 2023	*	Initial Release

Copyright © 2023 Texas Instruments Incorporated

5 Pin Configuration and Functions

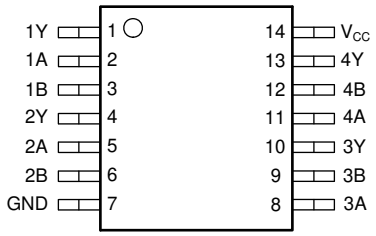

図 5-1. SN74AHCT02-Q1 PW Package, 14-Pin (Top View)

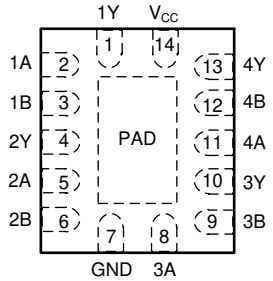

図 5-2. SN74AHCT02-Q1 BQA Package, 14-Pin (Top View)

表 5-1. Pin Functions

PIN		TYPE[(1)]	DESCRIPTION
NAME	No.		
1A	2	I	1A Input
1B	3	I	1B Input
1Y	1	O	1Y Output
2A	5	I	2A Input
2B	6	I	2B Input
2Y	4	O	2Y Output
3A	8	I	3A Input
3B	9	I	3B Input
3Y	10	O	3Y Output
4A	11	I	4A Input
4B	12	I	4B Input
4Y	13	O	4Y Output
GND	7	G	Ground Pin
V_{CC}	14	P	Power Pin
Thermal Pad[(2)]		-	The thermal pad can be connected to GND or left floating. Do not connect to any other signal or supply.

(1) I = input, O = output, I/O = input or output, G = ground, P = power.
(2) BQA package only

6 Specifications

6.1 Absolute Maximum Ratings

over operating free-air temperature range (unless otherwise noted) [(1)]

			MIN	MAX	UNIT
V_{CC}	Supply voltage range		−0.5	7	V
V_I [(2)]	Input voltage range		−0.5	7	V
V_O [(2)]	Output voltage range		−0.5	V_{CC} + 0.5	V
I_{IK}	Input clamp current	(V_I < 0)		-20	mA
I_O	Output clamp current	(V_O < 0 or V_O > V_{CC})		±20	mA
I_O	Continuous output current	(V_O = 0 to V_{CC})		±25	mA
	Continuous current through V_{CC} or GND			±50	mA
T_{stg}	Storage temperature range		−65	150	°C

(1) Stresses beyond those listed under *Absolute Maximum Ratings* may cause permanent damage to the device. These are stress ratings only, which do not imply functional operation of the device at these or any other conditions beyond those indicated under *Recommended Operating Conditions*. Exposure to absolute-maximum-rated conditions for extended periods may affect device reliability.
(2) The input and output voltage ratings may be exceeded if the input and output current ratings are observed.

6.2 ESD Ratings

			VALUE	UNIT
$V_{(ESD)}$	Electrostatic discharge	Human body model (HBM), per AEC Q100-002 HBM ESD Classification Level 2[(1)]	±2000	V
		Charged device model (CDM), per AEC Q100-011 CDM ESD Classification Level C4B	±1000	

(1) AEC Q100-002 indicate that HBM stressing shall be in accordance with the ANSI/ESDA/JEDEC JS-001 specification.

6.3 Recommended Operating Conditions

over operating free-air temperature range (unless otherwise noted)[(1)]

		MIN	MAX	UNIT
V_{CC}	Supply voltage	4.5	5.5	V
V_{IH}	High-level input voltage	2		V
V_{IL}	Low-level input voltage		0.8	V
V_I	Input voltage	0	5.5	V
V_O	Output voltage	0	V_{CC}	V
I_{OH}	High-level output current		–8	mA
I_{OL}	Low-level output current		8	mA
Δt/Δv	Input transition rise or fall rate		20	ns/V
T_A	Operating free-air temperature	−40	125	°C

(1) All unused inputs of the device must be held at V_{CC} or GND for proper device operation. Refer to the TI application report, Implications of Slow or Floating CMOS Inputs.

Copyright © 2023 Texas Instruments Incorporated

6.4 Thermal Information

THERMAL METRIC[1]		SN74AHCT02-Q1		UNIT
		BQA (WQFN)	PW (TSSOP)	
		14 PINS	14 PINS	
$R_{\theta JA}$	Junction-to-ambient thermal resistance	88.3	151.0	°C/W
$R_{\theta JC(top)}$	Junction-to-case (top) thermal resistance	90.9	80.0	°C/W
$R_{\theta JB}$	Junction-to-board thermal resistance	56.8	94.2	°C/W
Ψ_{JT}	Junction-to-top characterization parameter	9.9	28.0	°C/W
Y_{JB}	Junction-to-board characterization parameter	56.7	93.6	°C/W
$R_{\theta JC(bot)}$	Junction-to-case (bottom) thermal resistance	33.4	N/A	°C/W

(1) For more information about traditional and new thermal metrics, see the *IC Package Thermal Metrics* application report, SPRA953.

6.5 Electrical Characteristics

over recommended operating free-air temperature range (unless otherwise noted)

PARAMETER	TEST CONDITIONS	VCC	T_A = 25°C			T_A = -40°C to 125°C		UNIT
			MIN	TYP	MAX	MIN	MAX	
V_{OH}	I_{OH} = −50 µA	4.5 V	4.4	4.5		4.4		V
	I_{OH} = −8 mA		3.94			3.8		
V_{OL}	I_{OL} = 50 µA	4.5 V			0.1		0.1	V
	I_{OL} = 8 mA				0.36		0.44	
I_I	V_I = 5.5 V or GND	0 V to 5.5 V			±0.1		±1	µA
I_{CC}	V_I = V_{CC} or GND, I_O = 0	5.5 V			2		20	µA
ΔI_{CC} [1]	One input at 3.4 V, Other inputs at GND or VCC	5.5 V			1.35		1.5	mA
C_i	VI = VCC or GND	5 V		4	10		10	pF

(1) This is the increase in supply current for each input at one of the specified TTL voltage levels, rather than 0 V or V_{CC}.

6.6 Switching Characteristics

over operating free-air temperature range, V_{CC} = 5 V ± 0.5 V (unless otherwise noted). *See Parameter Measurement Information*

PARAMETER	FROM (INPUT)	TO (OUTPUT)	LOAD CAPACITANCE	T_A = 25°C			T_A = -40°C to 125°C		UNIT
				MIN	TYP	MAX	MIN	MAX	
t_{PLH}	A or B	Y	C_L = 15 pF		2.4	5.5	1	6.5	ns
t_{PHL}					3.5	5.5	1	6.5	
t_{PLH}	A or B	Y	C_L = 50 pF		3.4	7.5	1	8.5	ns
t_{PHL}					4.5	7.5	1	8.5	

6.7 Noise Characteristics

V_{CC} = 5 V, C_L = 50 pF, T_A = 25°C (unless otherwise noted)[1]

PARAMETER		SN74AHCT02-Q1			UNIT
		MIN	TYP	MAX	
$V_{OL(P)}$	Quiet output, maximum dynamic V_{OL}			0.8	V
$V_{OL(V)}$	Quiet output, minimum dynamic V_{OL}	-0.8			V
$V_{OH(V)}$	Quiet output, minimum dynamic V_{OH}		4.7		V
$V_{IH(D)}$	High-level dynamic input voltage	2			V
$V_{IL(D)}$	Low-level dynamic input voltage			0.8	V

(1) Characteristics are for surface-mount packages only.

6.8 Operating Characteristics

V_{CC} = 5 V, T_A = 25°C

PARAMETER		TEST CONDITIONS	TYP	UNIT
C_{pd}	Power dissipation capacitance1 2	No load, f = 1 MHz	17	pF

1. C_{PD} is used to determine the dynamic power consumption, per channel.
2. $P_D = V_{CC}{}^2 \times F_I \times (C_{PD} + C_L)$ where F_I= input frequency, C_L= output load capacitance, V_{CC}= supply voltage.

6.9 Typical Characteristics

T_A = 25°C (unless otherwise noted)

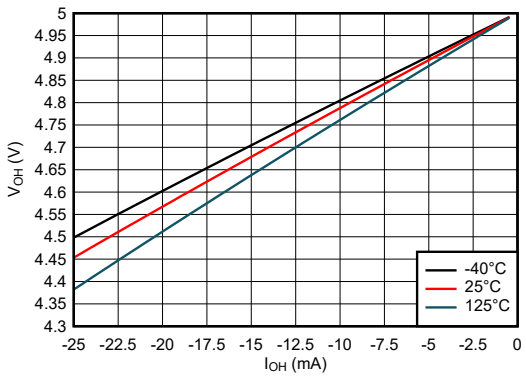

図 6-1. Output Voltage vs Current in HIGH State; 5-V Supply

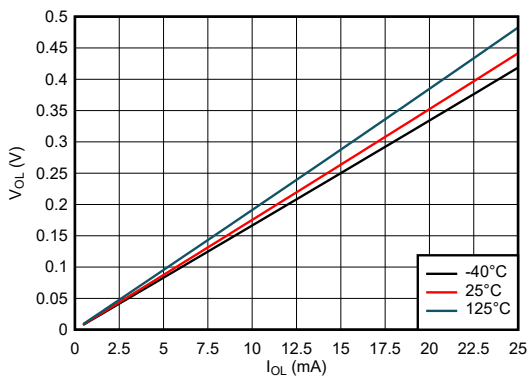

図 6-2. Output Voltage vs Current in LOW State; 5-V Supply

Copyright © 2023 Texas Instruments Incorporated

7 Parameter Measurement Information

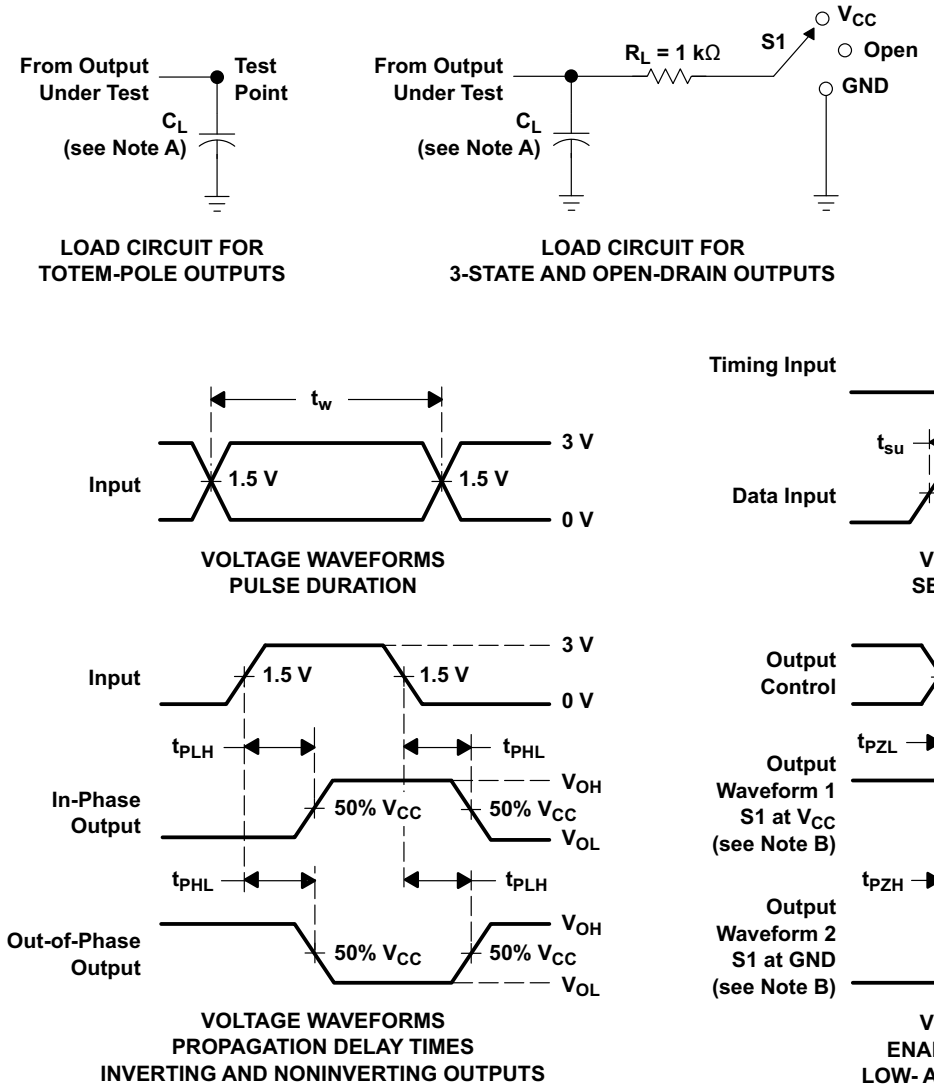

TEST	S1
t_{PLH}/t_{PHL}	Open
t_{PLZ}/t_{PZL}	V_{CC}
t_{PHZ}/t_{PZH}	GND
Open Drain	V_{CC}

NOTES: A. C_L includes probe and jig capacitance.
B. Waveform 1 is for an output with internal conditions such that the output is low except when disabled by the output control. Waveform 2 is for an output with internal conditions such that the output is high except when disabled by the output control.
C. All input pulses are supplied by generators having the following characteristics: PRR ≤ 1 MHz, Z_O = 50 Ω, t_r ≤ 3 ns, t_f ≤ 3 ns.
D. The outputs are measured one at a time with one input transition per measurement.
E. All parameters and waveforms are not applicable to all devices.

図 7-1. Load Circuit and Voltage Waveforms

8 Detailed Description

8.1 Overview

This device contains four independent 2-input NOR Gates. Each gate performs the Boolean function $Y = \overline{A + B}$ in positive logic.

8.2 Functional Block Diagram

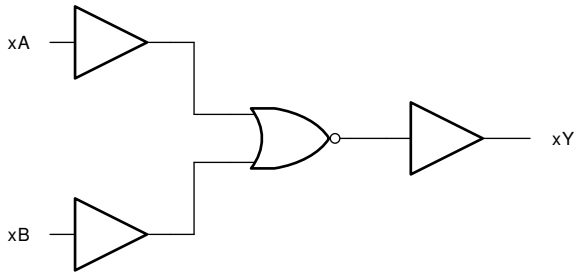

8.3 Feature Description

8.3.1 TTL-Compatible CMOS Inputs

This device includes TTL-compatible CMOS inputs. These inputs are specifically designed to interface with TTL logic devices by having a reduced input voltage threshold.

TTL-compatible CMOS inputs are high impedance and are typically modeled as a resistor in parallel with the input capacitance given in the *Electrical Characteristics*. The worst case resistance is calculated with the maximum input voltage, given in the *Absolute Maximum Ratings*, and the maximum input leakage current, given in the *Electrical Characteristics*, using Ohm's law (R = V ÷ I).

TTL-compatible CMOS inputs require that input signals transition between valid logic states quickly, as defined by the input transition time or rate in the *Recommended Operating Conditions* table. Failing to meet this specification will result in excessive power consumption and could cause oscillations. More details can be found in the *Implications of Slow or Floating CMOS Inputs* application report.

Do not leave TTL-compatible CMOS inputs floating at any time during operation. Unused inputs must be terminated at V_{CC} or GND. If a system will not be actively driving an input at all times, a pull-up or pull-down resistor can be added to provide a valid input voltage during these times. The resistor value will depend on multiple factors; however, a 10-kΩ resistor is recommended and will typically meet all requirements.

8.3.2 Balanced CMOS Push-Pull Outputs

This device includes balanced CMOS push-pull outputs. The term *balanced* indicates that the device can sink and source similar currents. The drive capability of this device may create fast edges into light loads, so routing and load conditions should be considered to prevent ringing. Additionally, the outputs of this device are capable of driving larger currents than the device can sustain without being damaged. It is important for the output power of the device to be limited to avoid damage due to overcurrent. The electrical and thermal limits defined in the *Absolute Maximum Ratings* must be followed at all times.

Unused push-pull CMOS outputs should be left disconnected.

8.3.3 Clamp Diode Structure

As 図 8-1 shows, the outputs to this device have both positive and negative clamping diodes, and the inputs to this device have negative clamping diodes only.

> **注意**
> Voltages beyond the values specified in the *Absolute Maximum Ratings* table can cause damage to the device. The input and output voltage ratings may be exceeded if the input and output clamp-current ratings are observed.

Copyright © 2023 Texas Instruments Incorporated

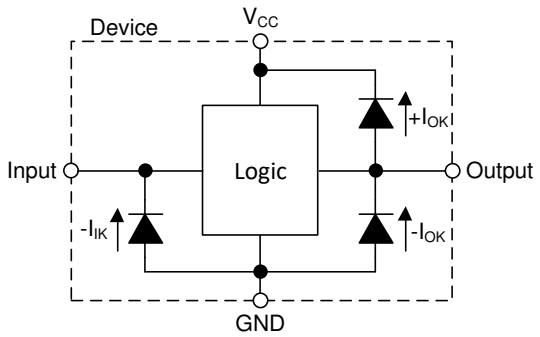

図 8-1. Electrical Placement of Clamping Diodes for Each Input and Output

8.3.4 Wettable Flanks

This device includes wettable flanks for at least one package. See the *Features* section on the front page of the data sheet for which packages include this feature.

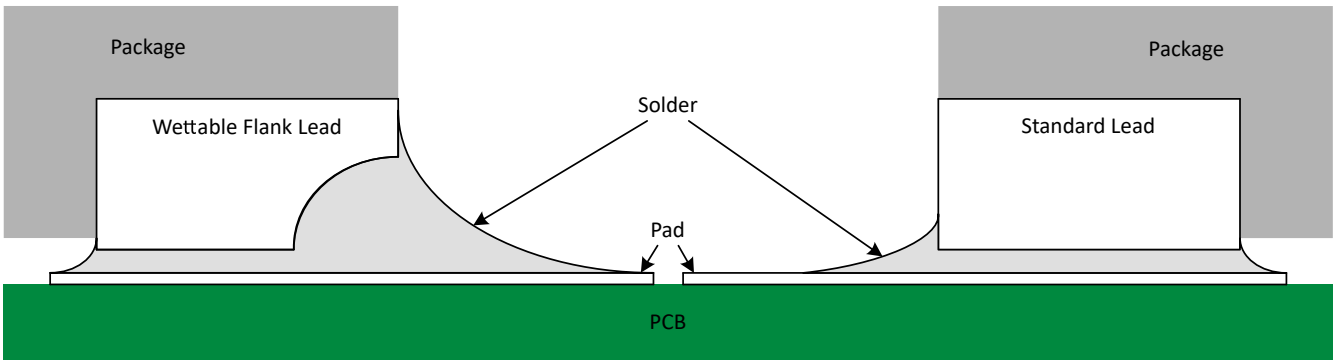

図 8-2. Simplified Cutaway View of Wettable-Flank QFN Package and Standard QFN Package After Soldering

Wettable flanks help improve side wetting after soldering, which makes QFN packages easier to inspect with automatic optical inspection (AOI). As shown in 図 8-2, a wettable flank can be dimpled or step-cut to provide additional surface area for solder adhesion which assists in reliably creating a side fillet. See the mechanical drawing for additional details.

8.4 Device Functional Modes

表 8-1. Function Table

INPUTS(1)		OUTPUT Y
A	B	
H	X	L
X	H	L
L	L	H

(1) H = High Voltage Level, L = Low Voltage Level, X = Don't Care

9 Application and Implementation

注

Information in the following applications sections is not part of the TI component specification, and TI does not warrant its accuracy or completeness. TI's customers are responsible for determining suitability of components for their purposes, as well as validating and testing their design implementation to confirm system functionality.

9.1 Application Information

In this application, two 2-input NOR gates are used to create an SR latch as shown in Typical application block diagram. The two additional gates can be used for a second SR latch, or the inputs can be grounded and both channels left unused.

The SN74AHCT02-Q1 is used to drive the tamper indicator LED and provide one bit of data to the system controller. When the tamper switch outputs HIGH, the output Q becomes HIGH. This output remains HIGH until the system controller addresses the event and sends a HIGH signal to the R input which returns the Q output back to LOW.

The user can add a small RC to the feedback path of the NOR gates to default the output to a certain state, which can create slow transition rates. This fact makes the SN74AHCT02-Q1 ideal for the application because it has Schmitt-trigger inputs that do not have input transition rate requirements.

9.2 Typical Application

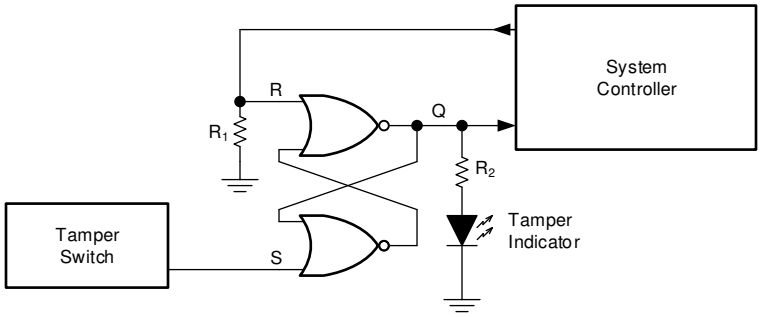

図 9-1. Typical application block diagram

9.2.1 Design Requirements

9.2.1.1 Power Considerations

Ensure the desired supply voltage is within the range specified in the *Recommended Operating Conditions*. The supply voltage sets the device's electrical characteristics as described in the *Electrical Characteristics* section.

The positive voltage supply must be capable of sourcing current equal to the maximum static supply current, I_{CC}, listed in the *Electrical Characteristics*, and any transient current required for switching.

The ground must be capable of sinking current equal to the total current to be sunk by all outputs of the SN74AHCT02-Q1 plus the maximum supply current, I_{CC}, listed in the *Electrical Characteristics*, and any transient current required for switching. The logic device can only sink as much current that can be sunk into its ground connection. Be sure to not exceed the maximum total current through GND listed in the *Absolute Maximum Ratings*.

The SN74AHCT02-Q1 can drive a load with a total capacitance less than or equal to 50 pF while still meeting all of the data sheet specifications. Larger capacitive loads can be applied; however, it is not recommended to exceed 50 pF.

Copyright © 2023 Texas Instruments Incorporated

The SN74AHCT02-Q1 can drive a load with total resistance described by $R_L \geq V_O / I_O$, with the output voltage and current defined in the *Electrical Characteristics* table with V_{OL}. When outputting in the HIGH state, the output voltage in the equation is defined as the difference between the measured output voltage and the supply voltage at the V_{CC} pin.

Total power consumption can be calculated using the information provided in *CMOS Power Consumption and Cpd Calculation*.

Thermal increase can be calculated using the information provided in *Thermal Characteristics of Standard Linear and Logic (SLL) Packages and Devices*.

> 注意
> The maximum junction temperature, $T_{J(max)}$ listed in the *Absolute Maximum Ratings*, is an additional limitation to prevent damage to the device. Do not violate any values listed in the *Absolute Maximum Ratings*. These limits are provided to prevent damage to the device.

9.2.1.2 Input Considerations

Input signals must cross to be considered a logic LOW, and to be considered a logic HIGH. Do not exceed the maximum input voltage range found in the *Absolute Maximum Ratings*.

Unused inputs must be terminated to either V_{CC} or ground. The unused inputs can be directly terminated if the input is completely unused, or they can be connected with a pull-up or pull-down resistor if the input will be used sometimes, but not always. A pull-up resistor is used for a default state of HIGH, and a pull-down resistor is used for a default state of LOW. The drive current of the controller, leakage current into the SN74AHCT02-Q1 (as specified in the *Electrical Characteristics*), and the desired input transition rate limits the resistor size. A 10-kΩ resistor value is often used due to these factors.

Refer to the *Feature Description* section for additional information regarding the inputs for this device.

9.2.1.3 Output Considerations

The ground voltage is used to produce the output LOW voltage. Sinking current into the output will increase the output voltage as specified by the V_{OL} specification in the *Electrical Characteristics*.

Unused outputs can be left floating. Do not connect outputs directly to V_{CC} or ground.

Refer to the *Feature Description* section for additional information regarding the outputs for this device.

9.2.2 Detailed Design Procedure

1. Add a decoupling capacitor from V_{CC} to GND. The capacitor needs to be placed physically close to the device and electrically close to both the V_{CC} and GND pins. An example layout is shown in the *Layout* section.
2. Ensure the capacitive load at the output is ≤ 50 pF. This is not a hard limit; by design, however, it will optimize performance. This can be accomplished by providing short, appropriately sized traces from the SN74AHCT02-Q1 to one or more of the receiving devices.
3. Ensure the resistive load at the output is larger than (V_{CC} / $I_{O(max)}$) Ω. Doing this will prevent the maximum output current from the *Absolute Maximum Ratings* from being violated. Most CMOS inputs have a resistive load measured in MΩ; much larger than the minimum calculated previously.
4. Thermal issues are rarely a concern for logic gates; the power consumption and thermal increase, however, can be calculated using the steps provided in the application report, *CMOS Power Consumption and Cpd Calculation*.

9.2.3 Application Curves

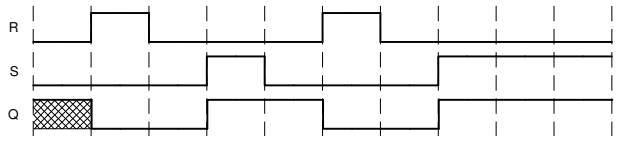

図 9-2. Application timing diagram

9.3 Power Supply Recommendations

The power supply can be any voltage between the minimum and maximum supply voltage rating located in the *Recommended Operating Conditions*. Each V_{CC} terminal should have a good bypass capacitor to prevent power disturbance. A 0.1-μF capacitor is recommended for this device. It is acceptable to parallel multiple bypass caps to reject different frequencies of noise. The 0.1-μF and 1-μF capacitors are commonly used in parallel. The bypass capacitor should be installed as close to the power terminal as possible for best results, as shown in given example layout image.

9.4 Layout

9.4.1 Layout Guidelines

When using multiple-input and multiple-channel logic devices inputs must not ever be left floating. In many cases, functions or parts of functions of digital logic devices are unused; for example, when only two inputs of a triple-input AND gate are used or only 3 of the 4 buffer gates are used. Such unused input pins must not be left unconnected because the undefined voltages at the outside connections result in undefined operational states. All unused inputs of digital logic devices must be connected to a logic high or logic low voltage, as defined by the input voltage specifications, to prevent them from floating. The logic level that must be applied to any particular unused input depends on the function of the device. Generally, the inputs are tied to GND or V_{CC}, whichever makes more sense for the logic function or is more convenient.

9.4.2 Layout Example

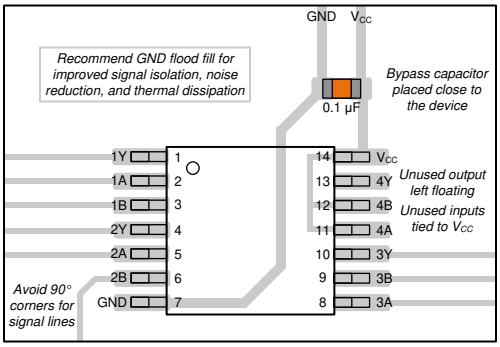

図 9-3. Example layout for the SN74AHCT02-Q1

Copyright © 2023 Texas Instruments Incorporated

10 Device and Documentation Support

10.1 ドキュメントの更新通知を受け取る方法

ドキュメントの更新についての通知を受け取るには、ti.com のデバイス製品フォルダを開いてください。「更新の通知を受け取る」をクリックして登録すると、変更されたすべての製品情報に関するダイジェストを毎週受け取れます。変更の詳細については、修正されたドキュメントに含まれている改訂履歴をご覧ください。

10.2 サポート・リソース

TI E2E™ サポート・フォーラムは、エンジニアが検証済みの回答と設計に関するヒントをエキスパートから迅速かつ直接得ることができる場所です。既存の回答を検索したり、独自の質問をしたりすることで、設計で必要な支援を迅速に得ることができます。

リンクされているコンテンツは、該当する貢献者により、現状のまま提供されるものです。これらは TI の仕様を構成するものではなく、必ずしも TI の見解を反映したものではありません。TI の使用条件を参照してください。

10.3 Trademarks

TI E2E™ is a trademark of Texas Instruments.
すべての商標は、それぞれの所有者に帰属します。

10.4 静電気放電に関する注意事項

この IC は、ESD によって破損する可能性があります。テキサス・インスツルメンツは、IC を取り扱う際には常に適切な注意を払うことを推奨します。正しい取り扱いおよび設置手順に従わない場合、デバイスを破損するおそれがあります。

ESD による破損は、わずかな性能低下からデバイスの完全な故障まで多岐にわたります。精密な IC の場合、パラメータがわずかに変化するだけで公表されている仕様から外れる可能性があるため、破損が発生しやすくなっています。

10.5 用語集

テキサス・インスツルメンツ用語集　　この用語集には、用語や略語の一覧および定義が記載されています。

11 Mechanical, Packaging, and Orderable Information

The following pages include mechanical, packaging, and orderable information. This information is the most current data available for the designated devices. This data is subject to change without notice and revision of this document. For browser-based versions of this data sheet, refer to the left-hand navigation.

PACKAGING INFORMATION

Orderable Device	Status (1)	Package Type	Package Drawing	Pins	Package Qty	Eco Plan (2)	Lead finish/ Ball material (6)	MSL Peak Temp (3)	Op Temp (°C)	Device Marking (4/5)	Samples
SN74AHCT02QPWRQ1	ACTIVE	TSSOP	PW	14	3000	RoHS & Green	NIPDAU	Level-1-260C-UNLIM	-40 to 125	LVT02Q	Samples
SN74AHCT02QWBQARQ1	ACTIVE	WQFN	BQA	14	3000	RoHS & Green	NIPDAU	Level-1-260C-UNLIM	-40 to 125	AHT02Q	Samples

(1) The marketing status values are defined as follows:
ACTIVE: Product device recommended for new designs.
LIFEBUY: TI has announced that the device will be discontinued, and a lifetime-buy period is in effect.
NRND: Not recommended for new designs. Device is in production to support existing customers, but TI does not recommend using this part in a new design.
PREVIEW: Device has been announced but is not in production. Samples may or may not be available.
OBSOLETE: TI has discontinued the production of the device.

(2) **RoHS:** TI defines "RoHS" to mean semiconductor products that are compliant with the current EU RoHS requirements for all 10 RoHS substances, including the requirement that RoHS substance do not exceed 0.1% by weight in homogeneous materials. Where designed to be soldered at high temperatures, "RoHS" products are suitable for use in specified lead-free processes. TI may reference these types of products as "Pb-Free".
RoHS Exempt: TI defines "RoHS Exempt" to mean products that contain lead but are compliant with EU RoHS pursuant to a specific EU RoHS exemption.
Green: TI defines "Green" to mean the content of Chlorine (Cl) and Bromine (Br) based flame retardants meet JS709B low halogen requirements of <=1000ppm threshold. Antimony trioxide based flame retardants must also meet the <=1000ppm threshold requirement.

(3) MSL, Peak Temp. - The Moisture Sensitivity Level rating according to the JEDEC industry standard classifications, and peak solder temperature.

(4) There may be additional marking, which relates to the logo, the lot trace code information, or the environmental category on the device.

(5) Multiple Device Markings will be inside parentheses. Only one Device Marking contained in parentheses and separated by a "~" will appear on a device. If a line is indented then it is a continuation of the previous line and the two combined represent the entire Device Marking for that device.

(6) Lead finish/Ball material - Orderable Devices may have multiple material finish options. Finish options are separated by a vertical ruled line. Lead finish/Ball material values may wrap to two lines if the finish value exceeds the maximum column width.

Important Information and Disclaimer: The information provided on this page represents TI's knowledge and belief as of the date that it is provided. TI bases its knowledge and belief on information provided by third parties, and makes no representation or warranty as to the accuracy of such information. Efforts are underway to better integrate information from third parties. TI has taken and continues to take reasonable steps to provide representative and accurate information but may not have conducted destructive testing or chemical analysis on incoming materials and chemicals. TI and TI suppliers consider certain information to be proprietary, and thus CAS numbers and other limited information may not be available for release.

In no event shall TI's liability arising out of such information exceed the total purchase price of the TI part(s) at issue in this document sold by TI to Customer on an annual basis.

OTHER QUALIFIED VERSIONS OF SN74AHCT02-Q1 :

- Catalog : SN74AHCT02
- Military : SN54AHCT02

NOTE: Qualified Version Definitions:

- Catalog - TI's standard catalog product
- Military - QML certified for Military and Defense Applications

GENERIC PACKAGE VIEW

BQA 14

WQFN - 0.8 mm max height

2.5 x 3, 0.5 mm pitch

PLASTIC QUAD FLATPACK - NO LEAD

This image is a representation of the package family, actual package may vary.
Refer to the product data sheet for package details.

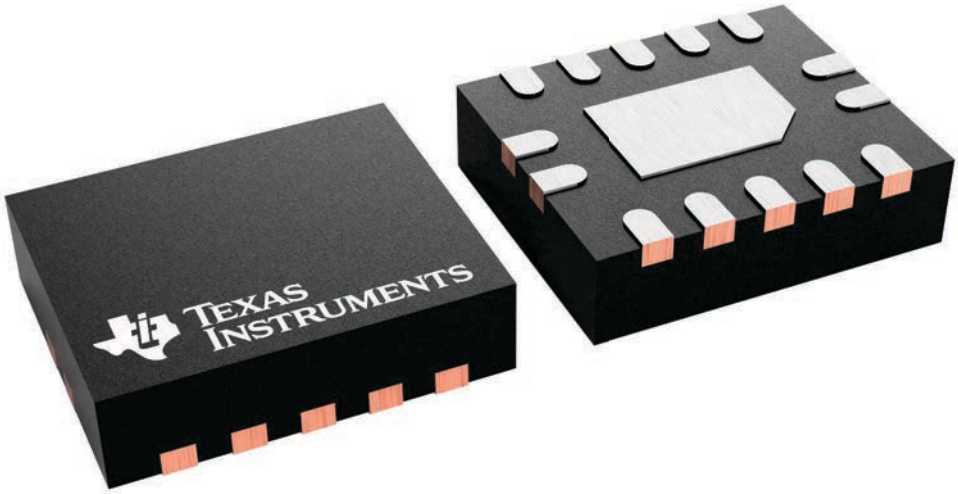

4227145/A

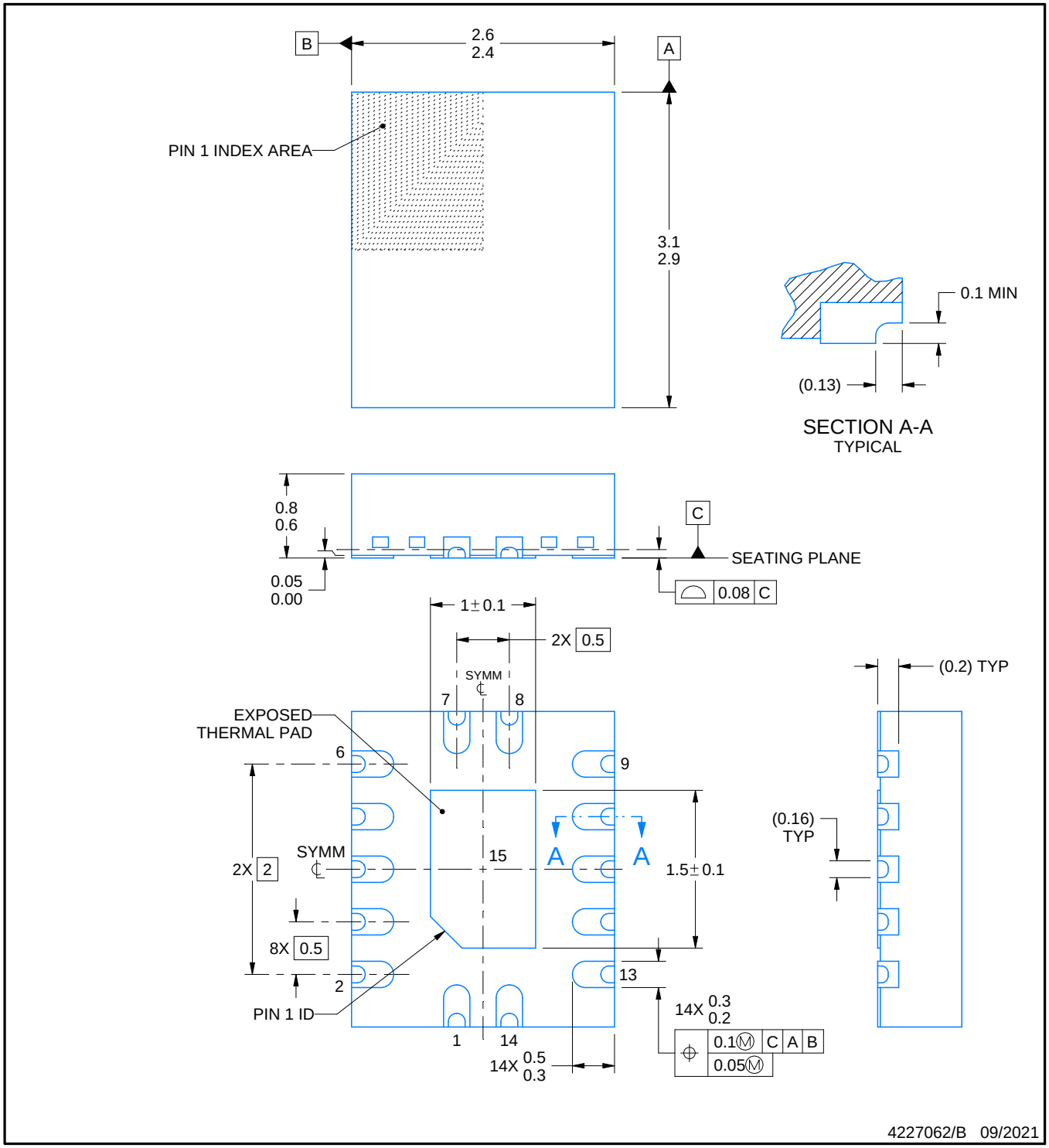

NOTES:

1. All linear dimensions are in millimeters. Any dimensions in parenthesis are for reference only. Dimensioning and tolerancing per ASME Y14.5M.
2. This drawing is subject to change without notice.
3. The package thermal pad must be soldered to the printed circuit board for thermal and mechanical performance.

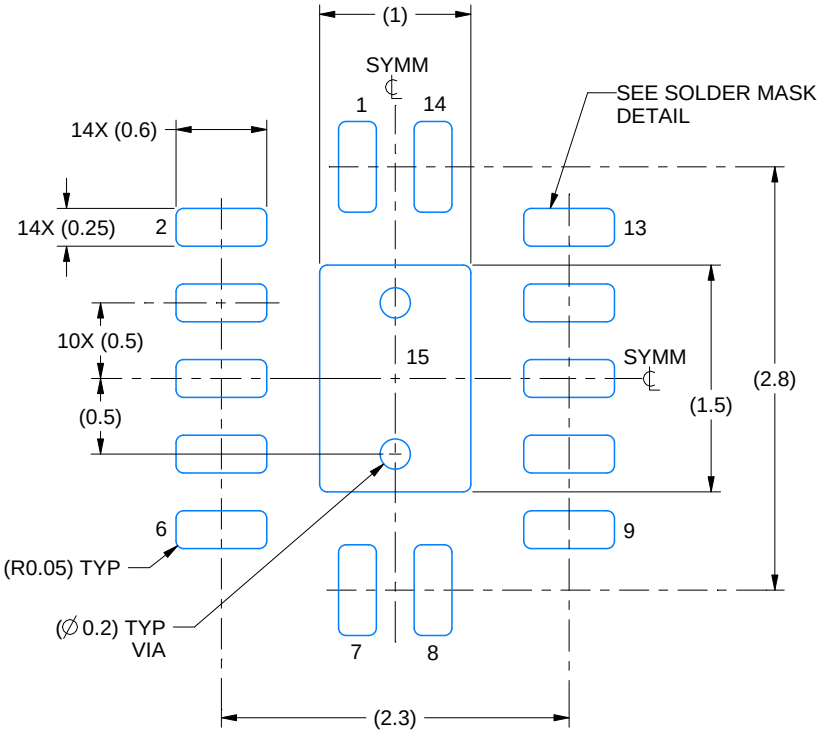

LAND PATTERN EXAMPLE
EXPOSED METAL SHOWN
SCALE: 20X

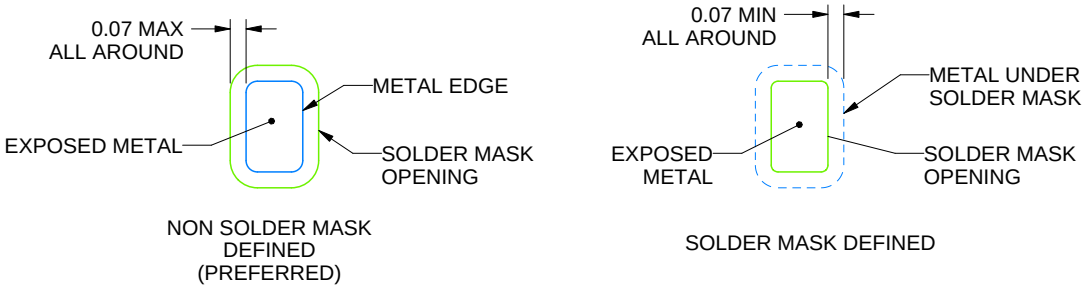

SOLDER MASK DETAILS

4227062/B 09/2021

NOTES: (continued)

4. This package is designed to be soldered to a thermal pad on the board. For more information, see Texas Instruments literature number SLUA271 (www.ti.com/lit/slua271).
5. Vias are optional depending on application, refer to device data sheet. If any vias are implemented, refer to their locations shown on this view. It is recommended that vias under paste be filled, plugged or tented.

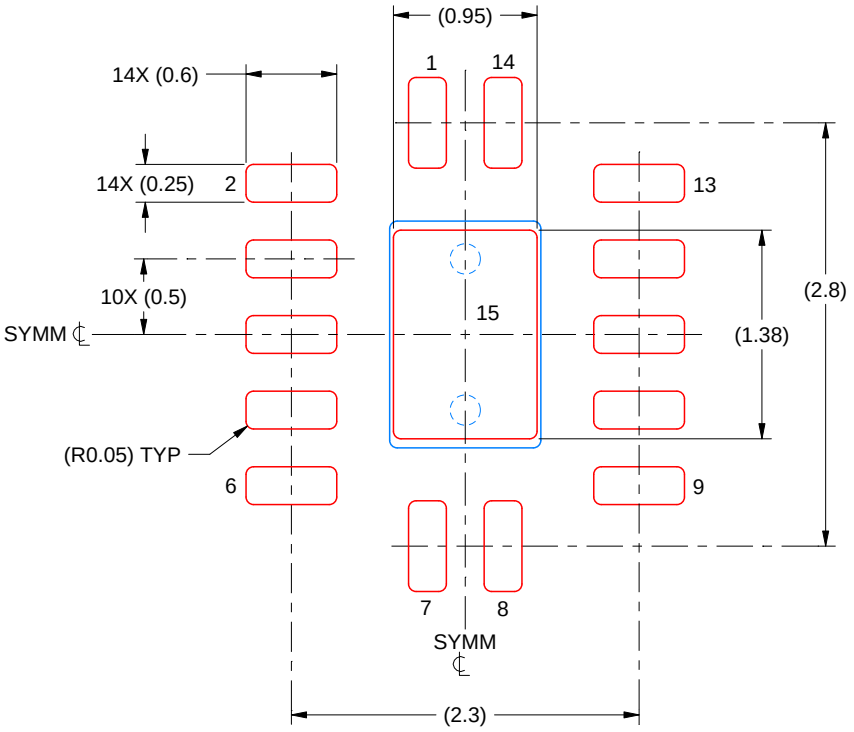

SOLDER PASTE EXAMPLE
BASED ON 0.125 MM THICK STENCIL
SCALE: 20X

EXPOSED PAD 15
87% PRINTED SOLDER COVERAGE BY AREA UNDER PACKAGE

4227062/B 09/2021

NOTES: (continued)

6. Laser cutting apertures with trapezoidal walls and rounded corners may offer better paste release. IPC-7525 may have alternate design recommendations.

PW (R–PDSO–G14) PLASTIC SMALL OUTLINE

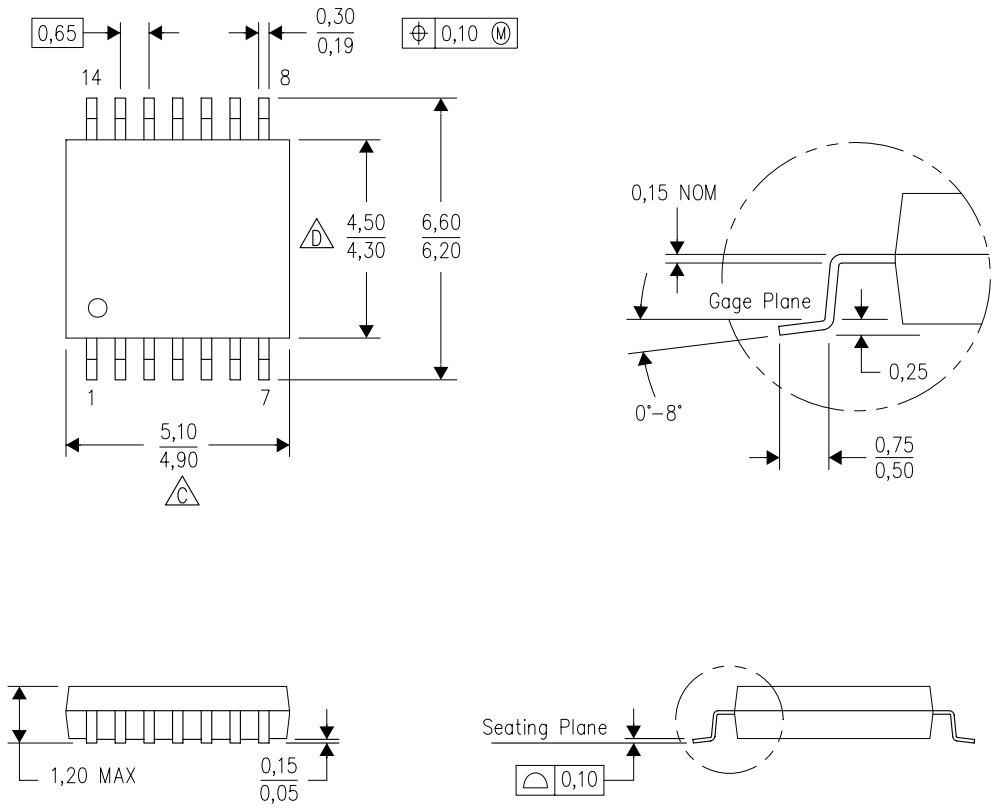

NOTES:
A. All linear dimensions are in millimeters. Dimensioning and tolerancing per ASME Y14.5M–1994.
B. This drawing is subject to change without notice.
C. Body length does not include mold flash, protrusions, or gate burrs. Mold flash, protrusions, or gate burrs shall not exceed 0,15 each side.
D. Body width does not include interlead flash. Interlead flash shall not exceed 0,25 each side.
E. Falls within JEDEC MO–153

重要なお知らせと免責事項

TI は、技術データと信頼性データ (データシートを含みます)、設計リソース (リファレンス・デザインを含みます)、アプリケーションや設計に関する各種アドバイス、Web ツール、安全性情報、その他のリソースを、欠陥が存在する可能性のある「現状のまま」提供しており、商品性および特定目的に対する適合性の黙示保証、第三者の知的財産権の非侵害保証を含むいかなる保証も、明示的または黙示的にかかわらず拒否します。

これらのリソースは、TI 製品を使用する設計の経験を積んだ開発者への提供を意図したものです。(1) お客様のアプリケーションに適した TI 製品の選定、(2) お客様のアプリケーションの設計、検証、試験、(3) お客様のアプリケーションに該当する各種規格や、その他のあらゆる安全性、セキュリティ、規制、または他の要件への確実な適合に関する責任を、お客様のみが単独で負うものとします。

上記の各種リソースは、予告なく変更される可能性があります。これらのリソースは、リソースで説明されている TI 製品を使用するアプリケーションの開発の目的でのみ、TI はその使用をお客様に許諾します。これらのリソースに関して、他の目的で複製することや掲載することは禁止されています。TI や第三者の知的財産権のライセンスが付与されている訳ではありません。お客様は、これらのリソースを自身で使用した結果発生するあらゆる申し立て、損害、費用、損失、責任について、TI およびその代理人を完全に補償するものとし、TI は一切の責任を拒否します。

TI の製品は、TI の販売条件、または ti.com やかかる TI 製品の関連資料などのいずれかを通じて提供する適用可能な条項の下で提供されています。TI がこれらのリソースを提供することは、適用される TI の保証または他の保証の放棄の拡大や変更を意味するものではありません。

お客様がいかなる追加条項または代替条項を提案した場合でも、TI はそれらに異議を唱え、拒否します。

郵送先住所：Texas Instruments, Post Office Box 655303, Dallas, Texas 75265
Copyright © 2023, Texas Instruments Incorporated