OPA858 5.5GHzゲイン帯域幅積、7V/Vゲイン安定、FET入力アンプ

1 特長

- 高いゲイン帯域幅積: 5.5GHz
- 不完全補償型、ゲイン7V/V以上 (安定)
- 超低バイアス電流MOSFET入力: 10pA
- 低入力電圧ノイズ: 2.5nV/√Hz
- スルーレート: 2000V/µs
- 低い入力容量
  - 同相: 0.6pF
  - 差動: 0.2pF
- 広い入力同相範囲
  - 正電源から1.4V
  - 負電源を含む
- TIA構成で2.5V_{PP}の出力スイング
- 電源電圧範囲: 3.3V～5.25V
- 静止電流: 20.5mA
- 8ピンのWSONパッケージで供給
- 温度範囲: －40～＋125℃

2 アプリケーション

- 高速トランスインピーダンス・アンプ
- レーザーによる距離測定
- LIDARレシーバ
- レベル・トランスミッタ(光学)
- 光学時間領域反射率測定(OTDR)
- 分散温度センシング
- 3Dスキャナ
- タイム・オブ・フライト(ToF)システム
- 自動運転システム

高速タイム・オブ・フライト・レシーバ

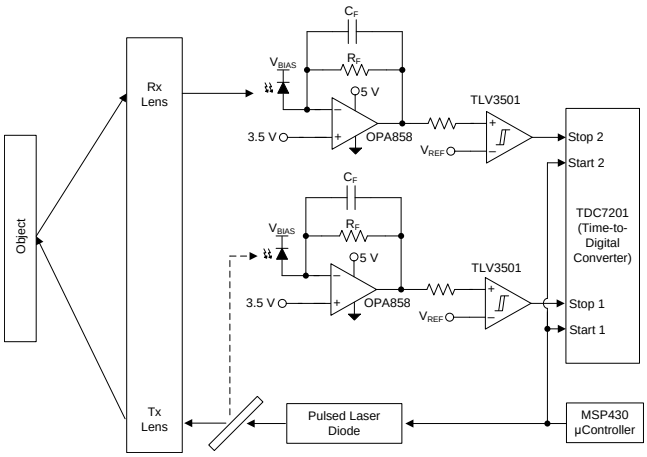

3 概要

OPA858は、広帯域トランスインピーダンスおよび電圧アンプ・アプリケーション用の、広帯域、低ノイズのCMOS入力オペアンプです。デバイスがトランスインピーダンス・アンプ(TIA)として構成されているとき、5.5GHzのゲイン帯域幅積により、数十～数百kΩの範囲のトランスインピーダンス・ゲインで高い閉ループ帯域幅を必要とするアプリケーションに使用できます。

下のグラフは、アンプがTIAとして構成されているときのOPA858の帯域幅およびノイズ特性を、フォトダイオード容量の関数として示したものです。合計ノイズは、左側のスケールでDCから、計算されるf_{-3dB}周波数までの帯域幅にわたって計算されます。OPA858のパッケージにはフィードバック・ピン(FB)が搭載されているため、入力と出力の間の帰還回路接続が簡単になります。

OPA858は、下の図に示すような光学的タイム・オブ・フライト(ToF)システムでの使用に最適化されており、この場合にOPA858はTDC7201時間/デジタル・コンバータとともに使用されます。OPA858は、高速のアナログ/デジタル・コンバータ(ADC)、およびADCを駆動するためのTHS4541やLMH5401などの差動出力アンプとともに、高分解能LIDARシステムにも使用できます。

製品情報(1)

型番	パッケージ	本体サイズ(公称)
OPA858	WSON (8)	2.00mm×2.00mm

(1) 利用可能なすべてのパッケージについては、このデータシートの末尾にある注文情報を参照してください。

フォトダイオード容量と帯域幅およびノイズとの関係

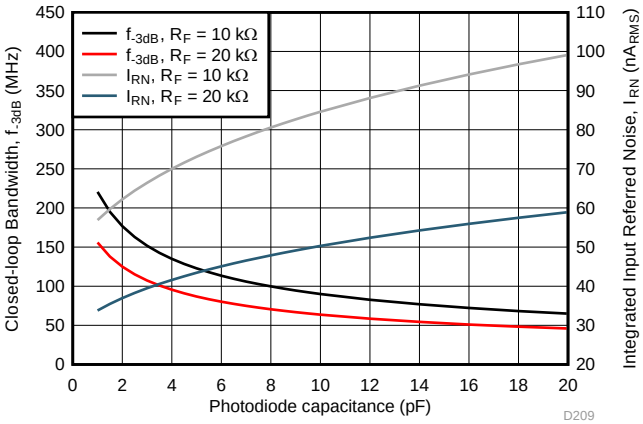

英語版のTI製品についての情報を翻訳したこの資料は、製品の概要を確認する目的で便宜的に提供しているものです。該当する正式な英語版の最新情報は、www.ti.comで閲覧でき、その内容が常に優先されます。TIでは翻訳の正確性および妥当性につきましては一切保証いたしません。実際の設計などの前には、必ず最新版の英語版をご参照くださいますようお願いいたします。

目次

1 特長 ... 1
2 アプリケーション ... 1
3 概要 ... 1
4 改訂履歴 ... 2
5 Device Comparison Table ... 3
6 Pin Configuration and Functions ... 3
7 Specifications ... 4
7.1 Absolute Maximum Ratings ... 4
7.2 ESD Ratings ... 4
7.3 Recommended Operating Conditions ... 4
7.4 Thermal Information ... 4
7.5 Electrical Characteristics ... 5
7.6 Typical Characteristics ... 7
8 Parameter Measurement Information ... 14
8.1 Parameter Measurement Information ... 14
9 Detailed Description ... 15
9.1 Overview ... 15
9.2 Functional Block Diagram ... 15
9.3 Feature Description ... 16
9.4 Device Functional Modes ... 19
10 Application and Implementation ... 20
10.1 Application Information ... 20
10.2 Typical Application ... 22
11 Power Supply Recommendations ... 24
12 Layout ... 25
12.1 Layout Guidelines ... 25
12.2 Layout Example ... 25
13 デバイスおよびドキュメントのサポート ... 27
13.1 ドキュメントの更新通知を受け取る方法 ... 27
13.2 コミュニティ・リソース ... 27
13.3 商標 ... 27
13.4 静電気放電に関する注意事項 ... 27
13.5 Glossary ... 27
14 メカニカル、パッケージ、および注文情報 ... 28

4 改訂履歴

資料番号末尾の英字は改訂を表しています。その改訂履歴は英語版に準じています。

2018年4月発行のものから更新 **Page**

- デバイスのステータスを「事前情報」から「量産データ」に 変更 ... 1

Copyright © 2018, Texas Instruments Incorporated

5 Device Comparison Table

DEVICE	INPUT TYPE	MINIMUM STABLE GAIN	VOLTAGE NOISE (nV/√Hz)	INPUT CAPACITANCE (pF)	GAIN BANDWIDTH (GHz)
OPA858	CMOS	7 V/V	2.5	0.8	5.5
OPA855	Bipolar	7 V/V	0.98	0.8	8
LMH6629	Bipolar	10 V/V	0.69	5.7	4

6 Pin Configuration and Functions

DSG Package
8-Pin WSON With Exposed Thermal Pad
Top View

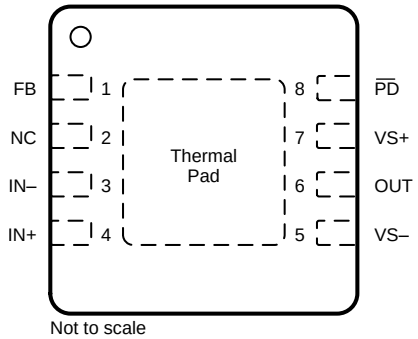

NC - no internal connection

Pin Functions

PIN		I/O	DESCRIPTION
NAME	NO.		
FB	1	I	Feedback connection to output of amplifier
IN–	3	I	Inverting input
IN+	4	I	Noninverting input
NC	2	—	Do not connect
OUT	6	O	Amplifier output
$\overline{PD}$	8	I	Power down connection. $\overline{PD}$ = logic low = power off mode; $\overline{PD}$ = logic high = normal operation
VS–	5	—	Negative voltage supply
VS+	7	—	Positive voltage supply
Thermal pad		—	Connect the thermal pad to VS–

Copyright © 2018, Texas Instruments Incorporated

7 Specifications

7.1 Absolute Maximum Ratings

over operating free-air temperature range (unless otherwise noted)[1]

		MIN	MAX	UNIT
V_S	Total supply voltage (V_{S+} – $V_{S–}$)		5.5	V
V_{IN+}, $V_{IN–}$	Input voltage	($V_{S–}$) – 0.5	(V_{S+}) + 0.5	
V_{ID}	Differential input voltage		1	
V_{OUT}	Output voltage	($V_{S–}$) – 0.5	(V_{S+}) + 0.5	
I_{IN}	Continuous input current		±10	mA
I_{OUT}	Continuous output current[2]		±100	
T_J	Junction temperature		150	°C
T_A	Operating free-air temperature		125	
T_{STG}	Storage temperature	–65	150	

(1) Stresses beyond those listed under *Absolute Maximum Ratings* may cause permanent damage to the device. These are stress ratings only, which do not imply functional operation of the device at these or any other conditions beyond those indicated under *Recommended Operating Conditions*. Exposure to absolute-maximum-rated conditions for extended periods may affect device reliability.
(2) Long-term continuous output current for electromigration limits.

7.2 ESD Ratings

			VALUE	UNIT
$V_{(ESD)}$	Electrostatic discharge	Human-body model (HBM), per ANSI/ESDA/JEDEC JS-001[1]	±1000	V
		Charged-device model (CDM), per JEDEC specification JESD22-C101[2]	±1500	

(1) JEDEC document JEP155 states that 500-V HBM allows safe manufacturing with a standard ESD control process.
(2) JEDEC document JEP157 states that 250-V CDM allows safe manufacturing with a standard ESD control process.

7.3 Recommended Operating Conditions

over operating free-air temperature range (unless otherwise noted)

		MIN	NOM	MAX	UNIT
V_S	Total supply voltage (V_{S+} – $V_{S–}$)	3.3	5	5.25	V

7.4 Thermal Information

THERMAL METRIC[1]		OPA858 DSG (WSON) 8 PINS	UNIT
$R_{\theta JA}$	Junction-to-ambient thermal resistance	80.1	°C/W
$R_{\theta JC(top)}$	Junction-to-case (top) thermal resistance	100	°C/W
$R_{\theta JB}$	Junction-to-board thermal resistance	45	°C/W
ψ_{JT}	Junction-to-top characterization parameter	6.8	°C/W
ψ_{JB}	Junction-to-board characterization parameter	45.2	°C/W
$R_{\theta JC(bot)}$	Junction-to-case (bottom) thermal resistance	22.7	°C/W

(1) For more information about traditional and new thermal metrics, see the *Semiconductor and IC Package Thermal Metrics* application report.

Copyright © 2018, Texas Instruments Incorporated

7.5 Electrical Characteristics

V_{S+} = 5 V, V_{S-} = 0 V, G = 7 V/V, R_F = 453 Ω, input common-mode biased at midsupply, R_L = 200 Ω, output load is referenced to midsupply, and T_A = 25℃ (unless otherwise noted)

PARAMETER		TEST CONDITIONS	MIN	TYP	MAX	UNIT	TEST LEVEL(1)
AC PERFORMANCE							
SSBW	Small-signal bandwidth	V_{OUT} = 100 mV_{PP}		1.2		GHz	C
LSBW	Large-signal bandwidth	V_{OUT} = 2 V_{PP}		600		MHz	C
GBWP	Gain-bandwidth product			5.5		GHz	C
	Bandwidth for 0.1-dB flatness			130		MHz	C
SR	Slew rate (10% - 90%)	V_{OUT} = 2-V step		2000		V/µs	C
t_r	Rise time	V_{OUT} = 100-mV step		0.3		ns	C
t_f	Fall time	V_{OUT} = 100-mV step		0.3		ns	C
	Settling time to 0.1%	V_{OUT} = 2-V step		8		ns	C
	Settling time to 0.001%	V_{OUT} = 2-V step		3000		ns	C
	Overshoot or undershoot	V_{OUT} = 2-V step		7%			C
	Overdrive recovery	2x output overdrive (0.1% recovery)		200		ns	C
HD2	Second-order harmonic distortion	f = 10 MHz, V_{OUT} = 2 V_{PP}		88		dBc	C
		f = 100 MHz, V_{OUT} = 2 V_{PP}		64			
HD3	Third-order harmonic distortion	f = 10 MHz, V_{OUT} = 2 V_{PP}		86		dBc	C
		f = 100 MHz, V_{OUT} = 2 V_{PP}		68			
e_n	Input-referred voltage noise	f = 1 MHz		2.5		nV/√Hz	C
Z_{OUT}	Closed-loop output impedance	f = 1 MHz		0.15		Ω	C
DC PERFORMANCE							
A_{OL}	Open-loop voltage gain		72	75		dB	A
V_{OS}	Input offset voltage	T_A = 25°C	–5	±0.8	5	mV	A
$\Delta V_{OS}/\Delta T$	Input offset voltage drift	T_A = –40°C to +125°C		±2		µV/°C	B
I_{BN}, I_{BI}	Input bias current	T_A = 25°C		±0.4	5	pA	A
I_{BOS}	Input offset current	T_A = 25°C		±0.01	5	pA	A
CMRR	Common-mode rejection ratio	V_{CM} = ±0.5 V, referenced to midsupply	70	90		dB	A
INPUT							
	Common-mode input resistance			1		GΩ	C
C_{CM}	Common-mode input capacitance			0.62		pF	C
	Differential input resistance			1		GΩ	C
C_{DIFF}	Differential input capacitance			0.2		pF	C
V_{IH}	Common-mode input range (high)	CMRR > 66 dB, V_{S+} = 3.3 V	1.7	1.9		V	A
V_{IL}	Common-mode input range (low)	CMRR > 66 dB, V_{S+} = 3.3 V		0	0.4	V	A
V_{IH}	Common-mode input range (high)	CMRR > 66 dB	3.4	3.6		V	A
		T_A = –40°C to +125°C, CMRR > 66 dB		3.4			B
V_{IL}	Common-mode input range (low)	CMRR > 66 dB		0	0.4	V	A
		T_A = –40°C to +125°C, CMRR > 66 dB		0.35			B
OUTPUT							
V_{OH}	Output voltage (high)	T_A = 25°C, V_{S+} = 3.3 V	2.3	2.4		V	A
V_{OH}	Output voltage (high)	T_A = 25°C	3.95	4.1		V	A
		T_A = –40°C to +125°C		3.9			B
V_{OL}	Output voltage (low)	T_A = 25°C, V_{S+} = 3.3 V		1.05	1.15	V	A

(1) Test levels (all values set by characterization and simulation): (A) 100% tested at 25°C, overtemperature limits by characterization and simulation; (B) Not tested in production, limits set by characterization and simulation; (C) Typical value only for information.

Copyright © 2018, Texas Instruments Incorporated

Electrical Characteristics (continued)

V_{S+} = 5 V, V_{S-} = 0 V, G = 7 V/V, R_F = 453 Ω, input common-mode biased at midsupply, R_L = 200 Ω, output load is referenced to midsupply, and T_A = 25℃ (unless otherwise noted)

PARAMETER		TEST CONDITIONS	MIN	TYP	MAX	UNIT	TEST LEVEL(1)
V_{OL}	Output voltage (low)	T_A = 25°C		1.05	1.15	V	A
		T_A = –40°C to +125°C		1.2			B
	Linear output drive (sink and source)	R_L = 10 Ω, A_{OL} > 60 dB	65	80		mA	A
		T_A = –40°C to +125°C, R_L = 10 Ω, A_{OL} > 60 dB		64			B
I_{SC}	Output short-circuit current		85	105		mA	A
POWER SUPPLY							
V_S	Operating voltage		3.3		5.25	V	A
I_Q	Quiescent current	V_{S+} = 5 V	18	20.5	24	mA	A
I_Q	Quiescent current	V_{S+} = 3.3 V	17.5	20	23.5	mA	A
I_Q	Quiescent current	V_{S+} = 5.25 V	18	21	24	mA	A
I_Q	Quiescent current	T_A = 125°C		24.5		mA	B
I_Q	Quiescent current	T_A = –40°C		18.5		mA	B
PSRR+	Positive power-supply rejection ratio		74	84		dB	A
PSRR–	Negative power-supply rejection ratio		70	80			
POWER DOWN							
	Disable voltage threshold	Amplifier OFF below this voltage	0.65	1		V	A
	Enable voltage threshold	Amplifier ON above this voltage		1.5	1.8	V	A
	Power-down quiescent current			70	140	µA	A
	$\overline{PD}$ bias current			70	200	µA	A
	Turnon time delay	Time to V_{OUT} = 90% of final value		13		ns	C
	Turnoff time delay			120		ns	C

Copyright © 2018, Texas Instruments Incorporated

7.6 Typical Characteristics

V_{S+} = 2.5 V, V_{S-} = –2.5 V, V_{IN+} = 0 V, R_F = 453 Ω, Gain = 7 V/V, R_L = 200 Ω, output load referenced to midsupply, and T_A = 25°C (unless otherwise noted)

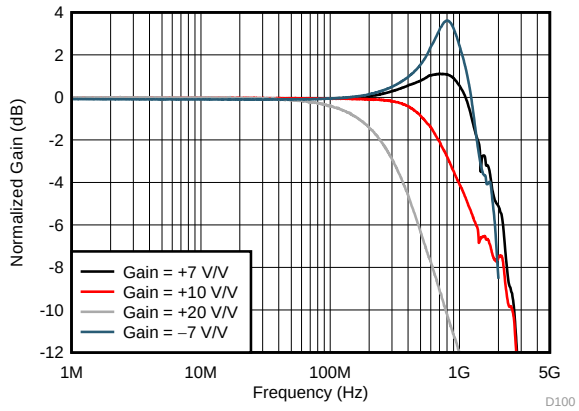

V_{OUT} = 100 mV_{PP}; see 図 43 and 図 44 for circuit configuration

図 1. Small-Signal Frequency Response vs Gain

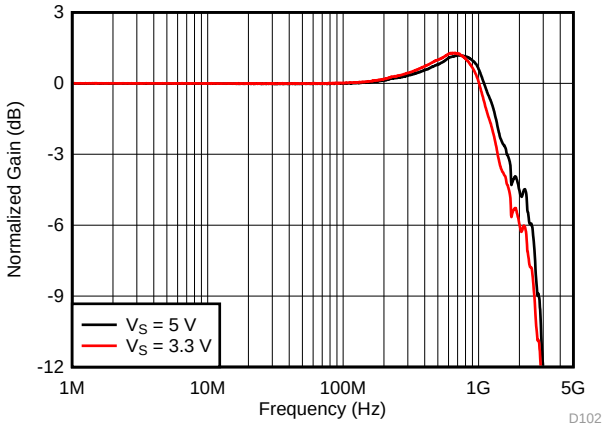

V_{OUT} = 100 mV_{PP}

図 2. Small-Signal Frequency Response vs Supply Voltage

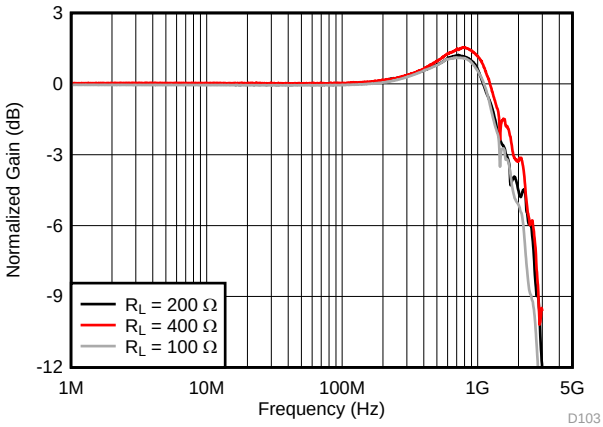

V_{OUT} = 100 mV_{PP}

図 3. Small-Signal Frequency Response vs Output Load

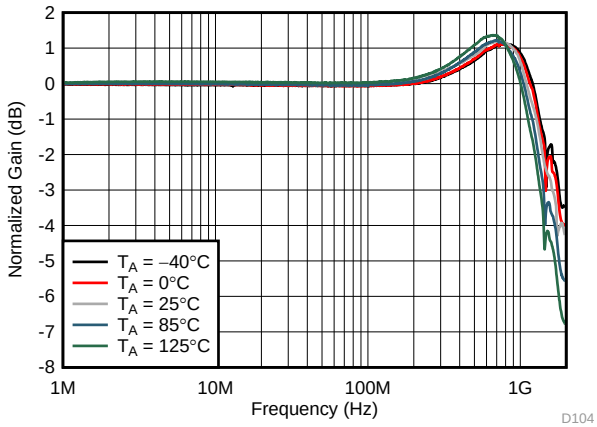

V_{OUT} = 100 mV_{PP}

図 4. Small-Signal Frequency Response vs Ambient Temperature

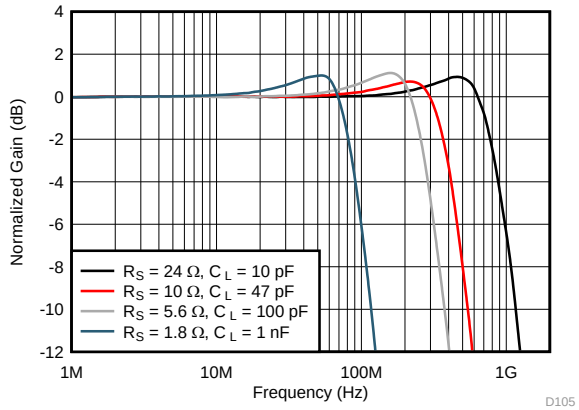

V_{OUT} = 100 mV_{PP}; see 図 45 for circuit configuration

図 5. Small-Signal Frequency Response vs Capacitive Load

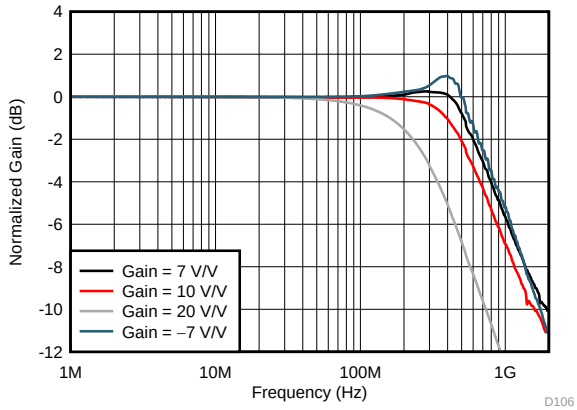

V_{OUT} = 2 V_{PP}

図 6. Large-Signal Frequency Response vs Gain

Typical Characteristics (continued)

V_{S+} = 2.5 V, V_{S-} = –2.5 V, V_{IN+} = 0 V, R_F = 453 Ω, Gain = 7 V/V, R_L = 200 Ω, output load referenced to midsupply, and T_A = 25°C (unless otherwise noted)

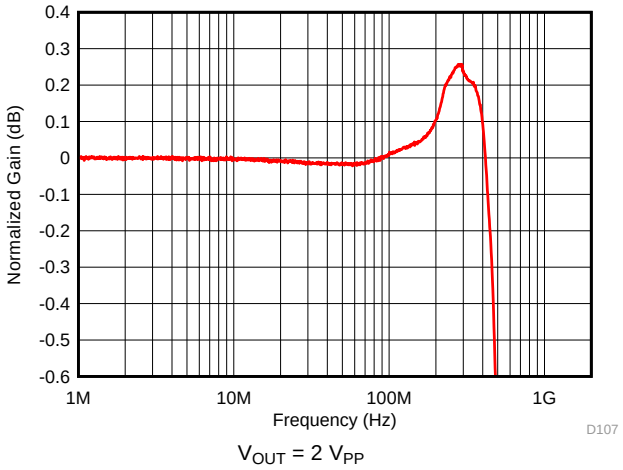

図 7. Large-Signal Response for 0.1-dB Gain Flatness

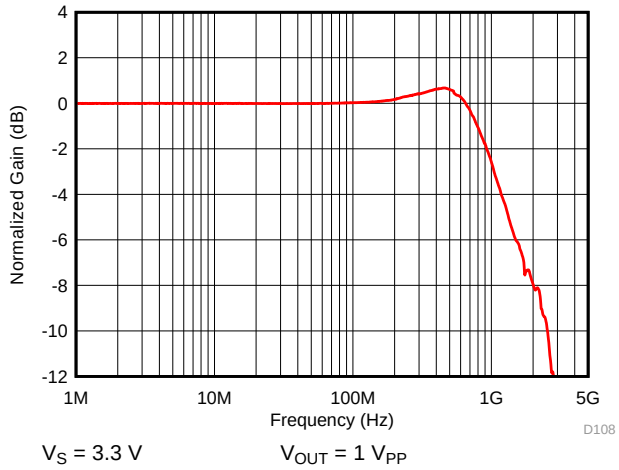

図 8. Large-Signal Frequency Response

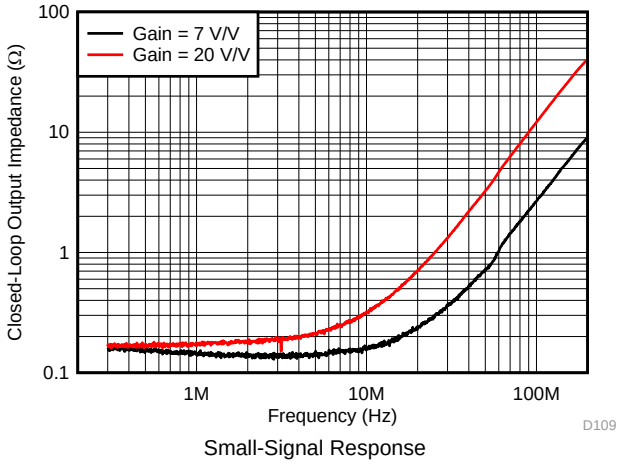

図 9. Closed-Loop Output Impedance vs Frequency

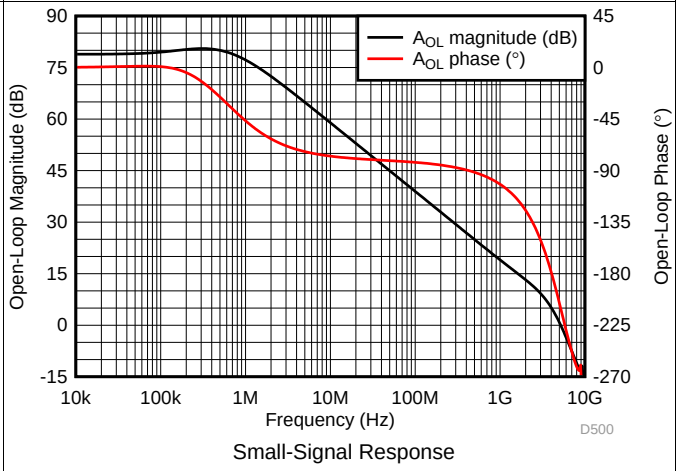

図 10. Open-Loop Magnitude and Phase vs Frequency

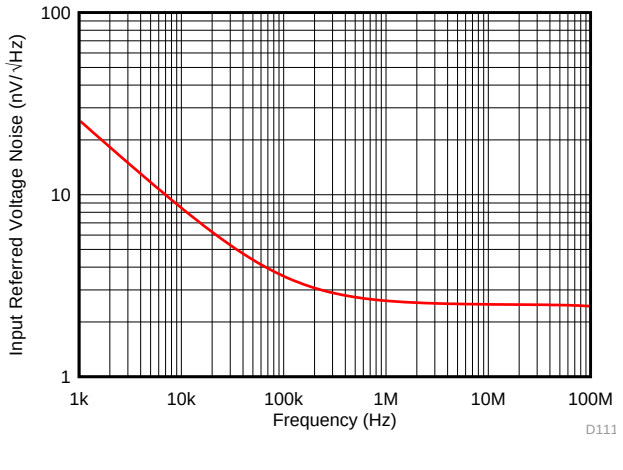

図 11. Voltage Noise Density vs Frequency

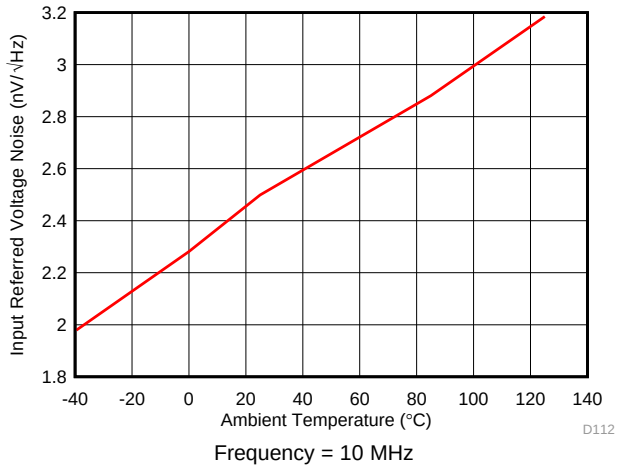

図 12. Voltage Noise Density vs Ambient Temperature

Copyright © 2018, Texas Instruments Incorporated

Typical Characteristics (continued)

V_{S+} = 2.5 V, V_{S-} = –2.5 V, V_{IN+} = 0 V, R_F = 453 Ω, Gain = 7 V/V, R_L = 200 Ω, output load referenced to midsupply, and T_A = 25°C (unless otherwise noted)

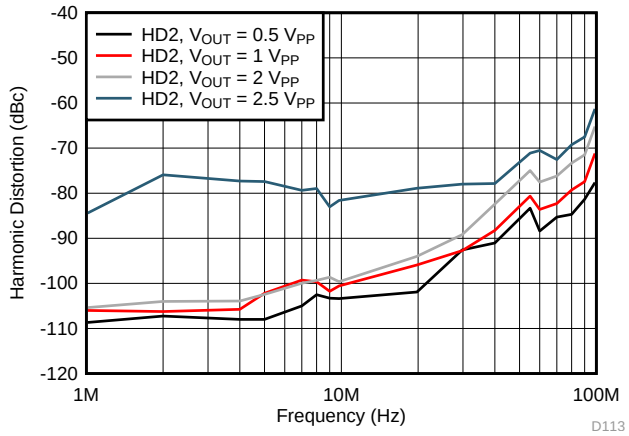

図 13. Harmonic Distortion (HD2) vs Output Swing

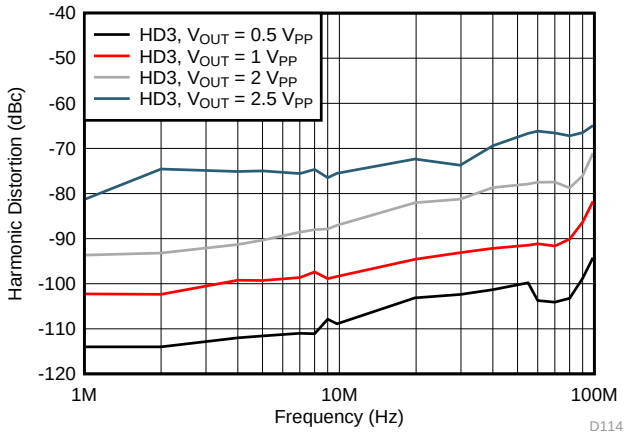

図 14. Harmonic Distortion (HD3) vs Output Swing

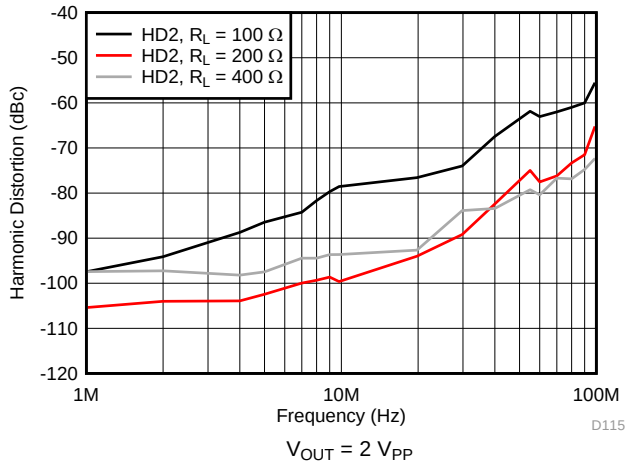

図 15. Harmonic Distortion (HD2) vs Output Load

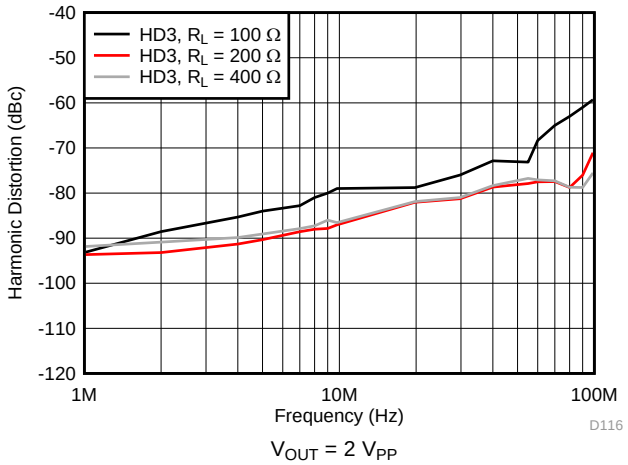

図 16. Harmonic Distortion (HD3) vs Output Load

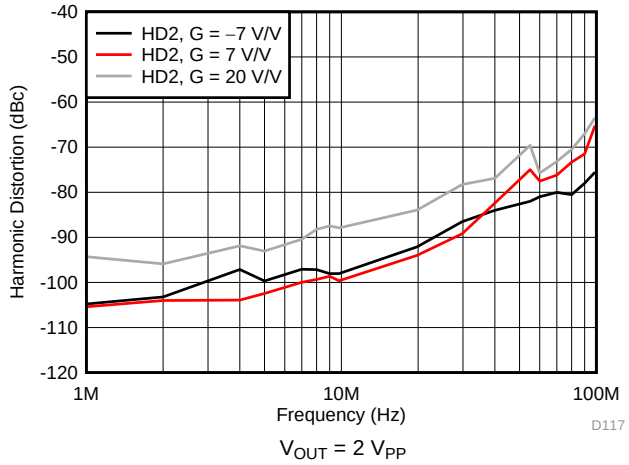

図 17. Harmonic Distortion (HD2) vs Gain

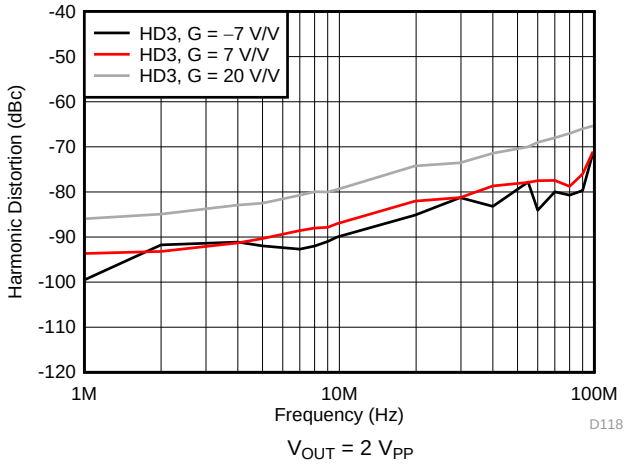

図 18. Harmonic Distortion (HD3) vs Gain

Copyright © 2018, Texas Instruments Incorporated

Typical Characteristics (continued)

V_{S+} = 2.5 V, V_{S-} = –2.5 V, V_{IN+} = 0 V, R_F = 453 Ω, Gain = 7 V/V, R_L = 200 Ω, output load referenced to midsupply, and T_A = 25°C (unless otherwise noted)

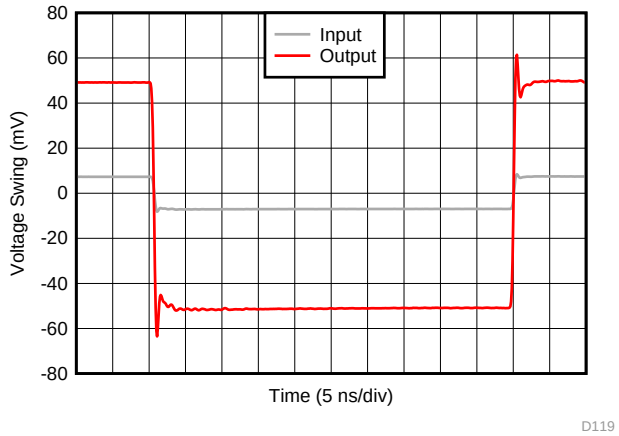

Average Rise and Fall Time (10% - 90%) = 450 ps

図 19. Small-Signal Transient Response

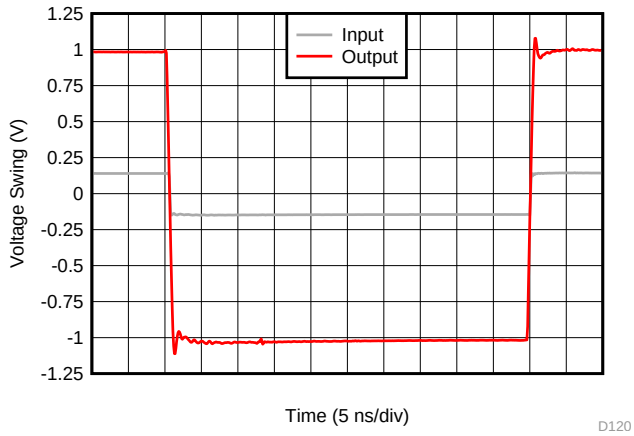

Average Rise and Fall Time (10% - 90%) = 750 ps

図 20. Large-Signal Transient Response

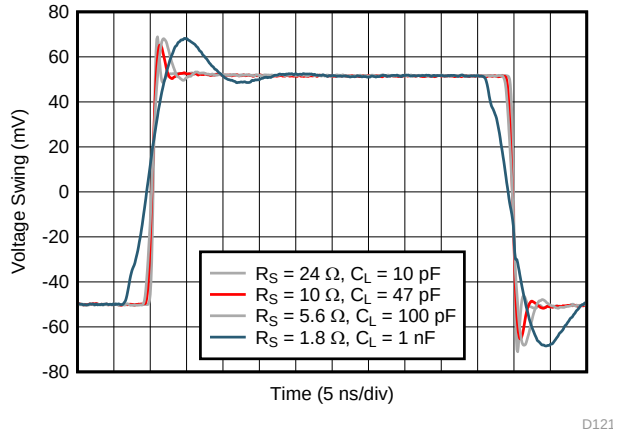

図 21. Small-Signal Transient Response vs Capacitive Load

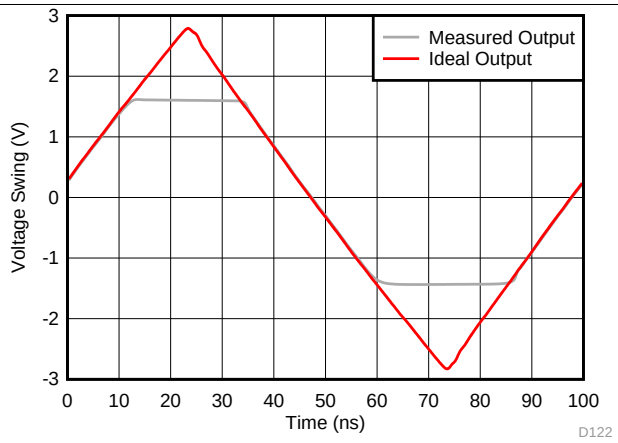

2x Output Overdrive

図 22. Output Overload Response

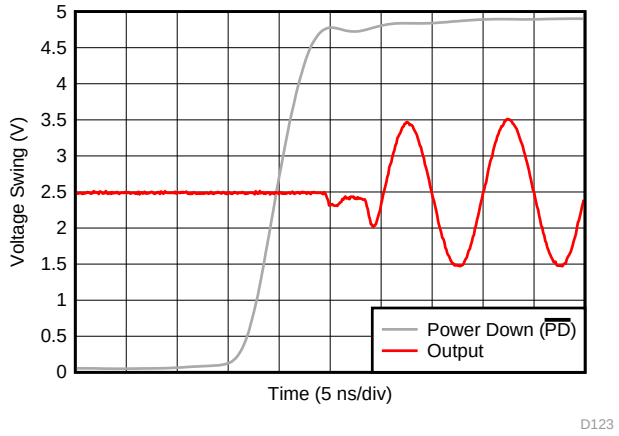

V_{S+} = 5 V, V_{S-} = Ground

図 23. Turnon Transient Response

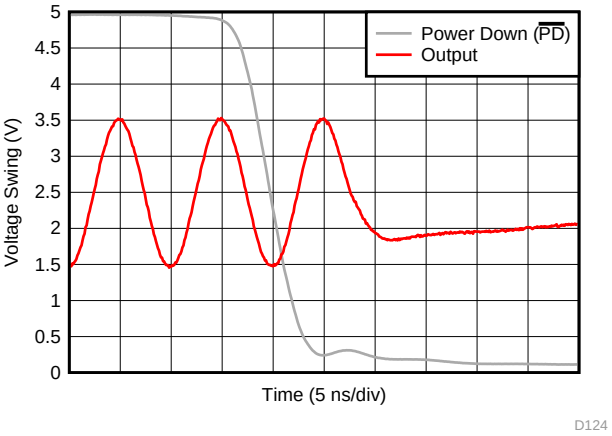

V_{S+} = 5 V, V_{S-} = Ground

図 24. Turnoff Transient Response

Copyright © 2018, Texas Instruments Incorporated

Typical Characteristics (continued)

V_{S+} = 2.5 V, V_{S-} = –2.5 V, V_{IN+} = 0 V, R_F = 453 Ω, Gain = 7 V/V, R_L = 200 Ω, output load referenced to midsupply, and T_A = 25°C (unless otherwise noted)

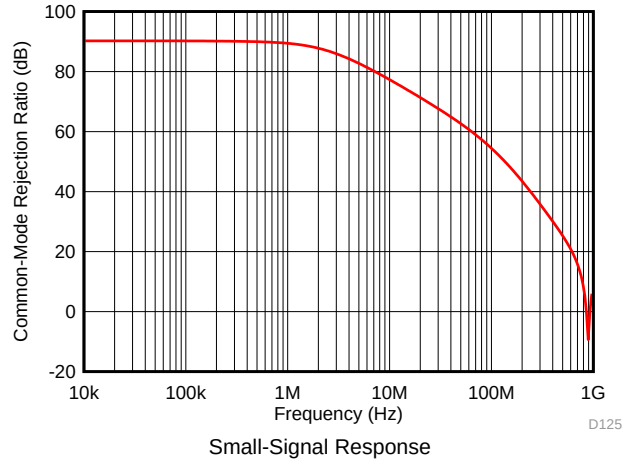

図 25. Common-Mode Rejection Ratio vs Frequency

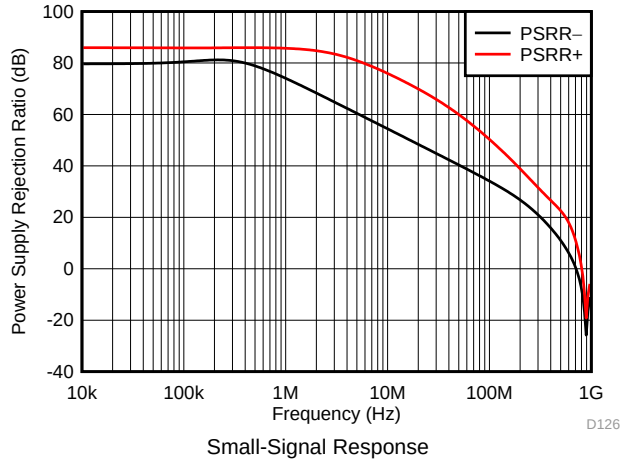

図 26. Power Supply Rejection Ratio vs Frequency

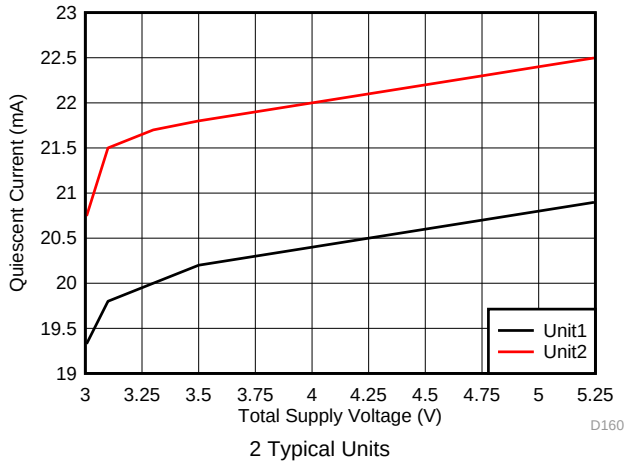

図 27. Quiescent Current vs Supply Voltage

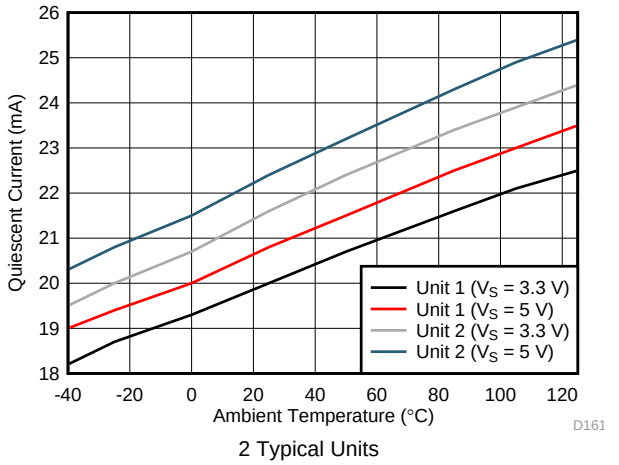

図 28. Quiescent Current vs Ambient Temperature

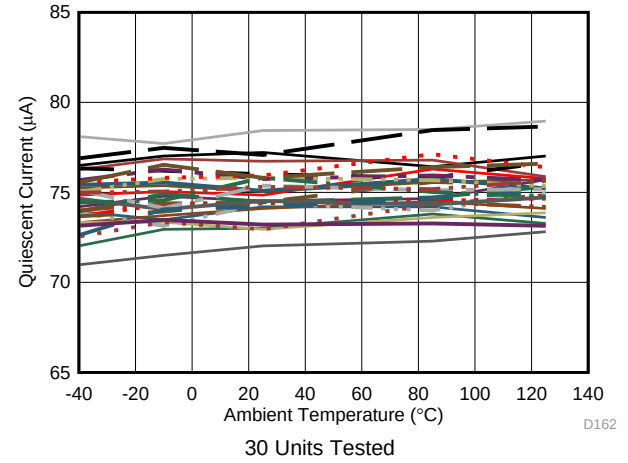

図 29. Quiescent Current (Amplifier Disabled) vs Ambient Temperature

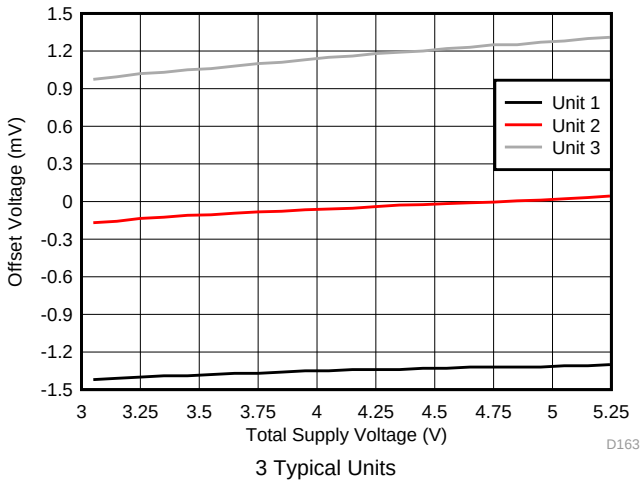

図 30. Offset Voltage vs Supply Voltage

Copyright © 2018, Texas Instruments Incorporated

Typical Characteristics (continued)

V_{S+} = 2.5 V, V_{S-} = –2.5 V, V_{IN+} = 0 V, R_F = 453 Ω, Gain = 7 V/V, R_L = 200 Ω, output load referenced to midsupply, and T_A = 25°C (unless otherwise noted)

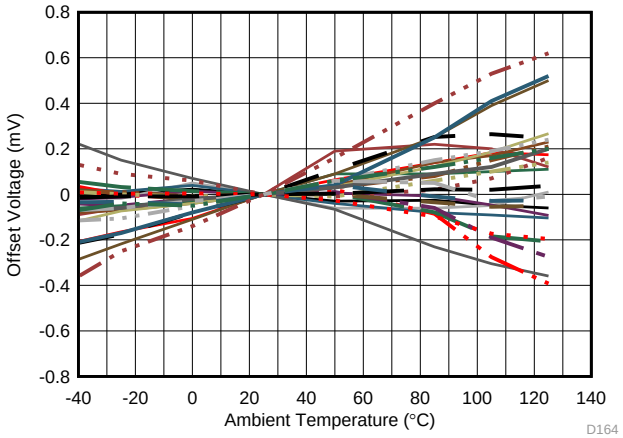

μ = 1 μV/°C σ = 2.2 μV/°C 28 Units Tested

図 31. Offset Voltage vs Ambient Temperature

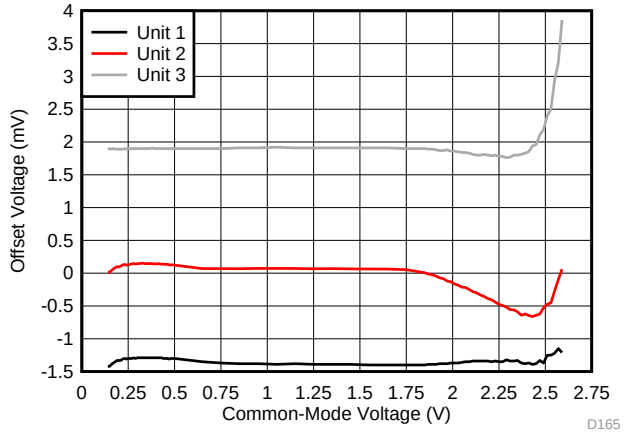

V_S = 3.3 V 3 Typical Units

図 32. Offset Voltage vs Input Common-Mode Voltage

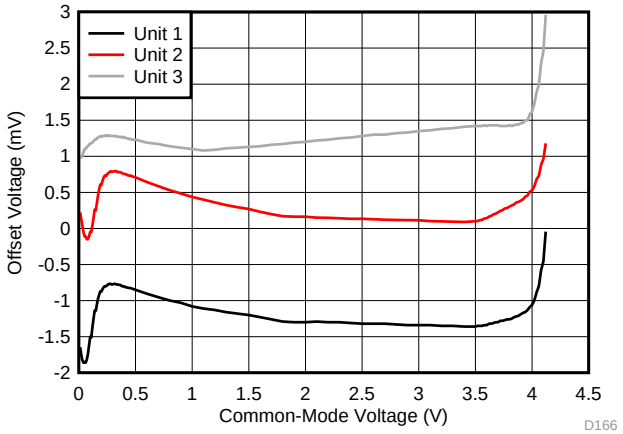

V_S = 5 V 3 Typical Units

図 33. Offset Voltage vs Input Common-Mode Voltage

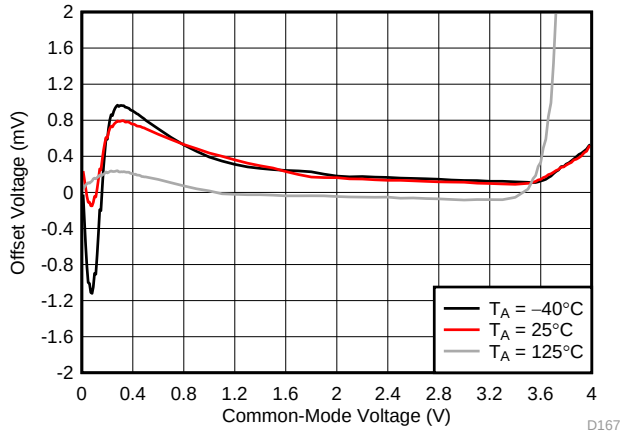

図 34. Offset Voltage vs Input Common-Mode Voltage vs Ambient Temperature

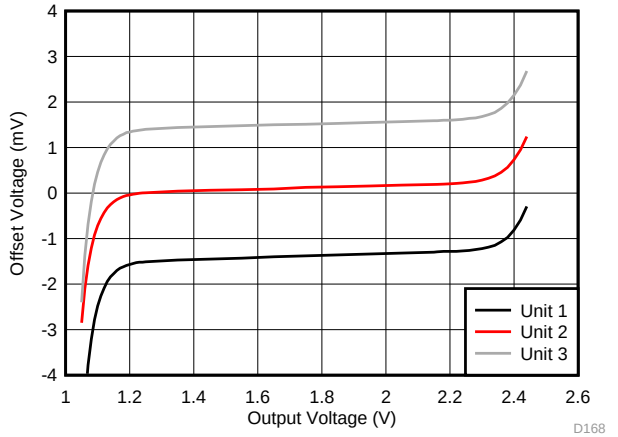

V_S = 3.3 V 3 Typical Units

図 35. Offset Voltage vs Output Swing

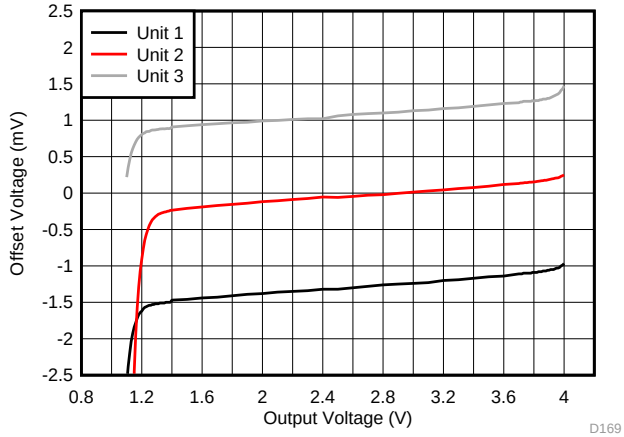

V_S = 5 V 3 Typical Units

図 36. Offset Voltage vs Output Swing

Copyright © 2018, Texas Instruments Incorporated

Typical Characteristics (continued)

V_{S+} = 2.5 V, V_{S-} = –2.5 V, V_{IN+} = 0 V, R_F = 453 Ω, Gain = 7 V/V, R_L = 200 Ω, output load referenced to midsupply, and T_A = 25°C (unless otherwise noted)

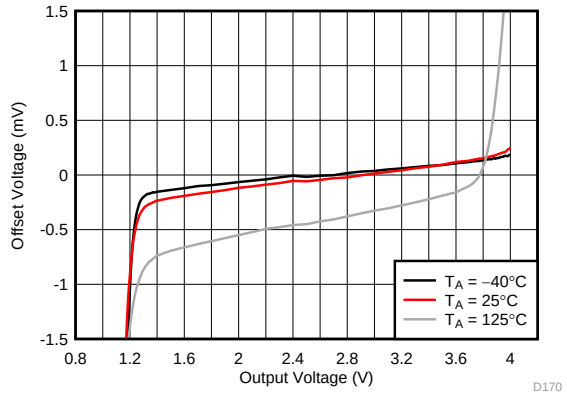

図 37. Offset Voltage vs Output Swing vs Ambient Temperature

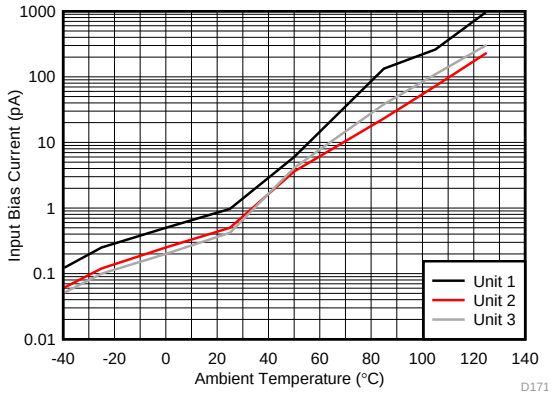

3 Typical Units

図 38. Input Bias Current vs Ambient Temperature

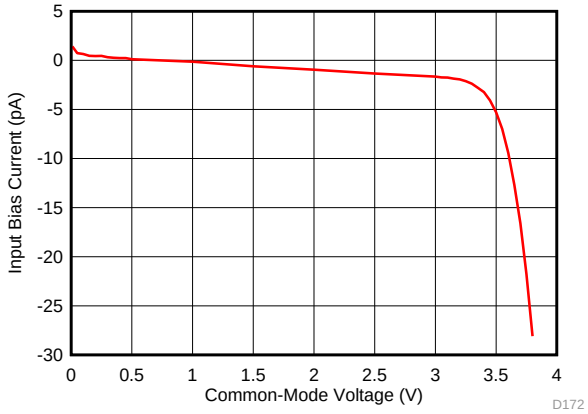

図 39. Input Bias Current vs Input Common-Mode Voltage

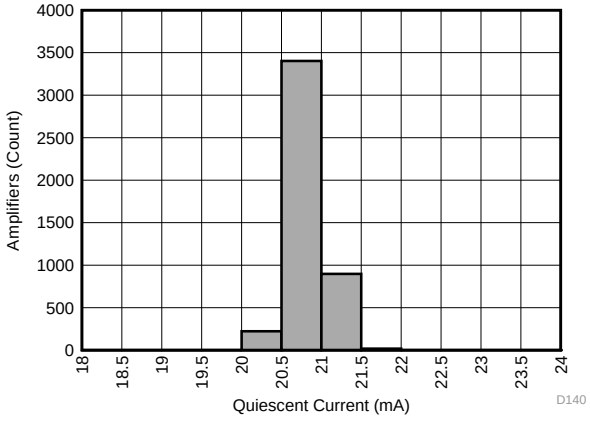

μ = 20.35 mA σ = 0.2 mA 4555 units tested

図 40. Quiescent Current Distribution

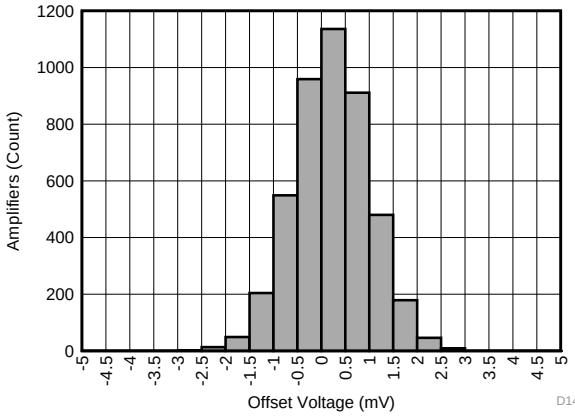

μ = –0.28 mV σ = 0.8 mV 4555 units tested

図 41. Offset Voltage Distribution

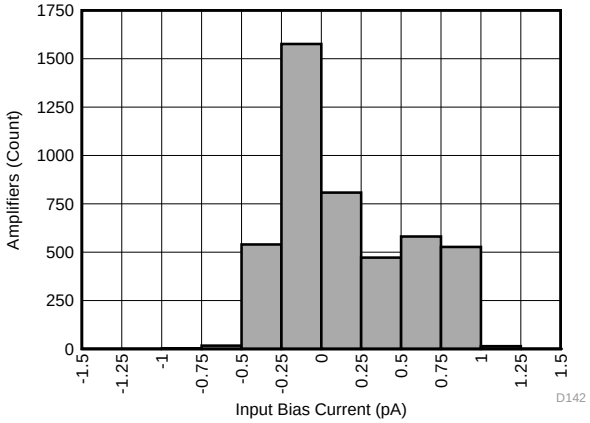

μ = –0.1 pA σ = 0.39 pA 4555 units tested

図 42. Input Bias Current Distribution

8 Parameter Measurement Information

8.1 Parameter Measurement Information

The various test setup configurations for the OPA858 are shown below

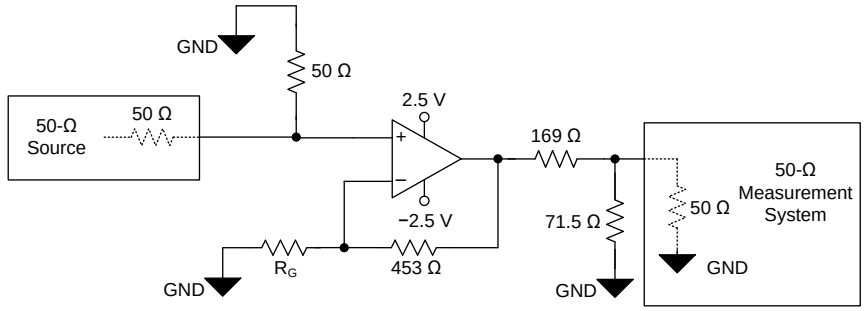

R_G values depend on gain configuration

図 43. Noninverting Configuration

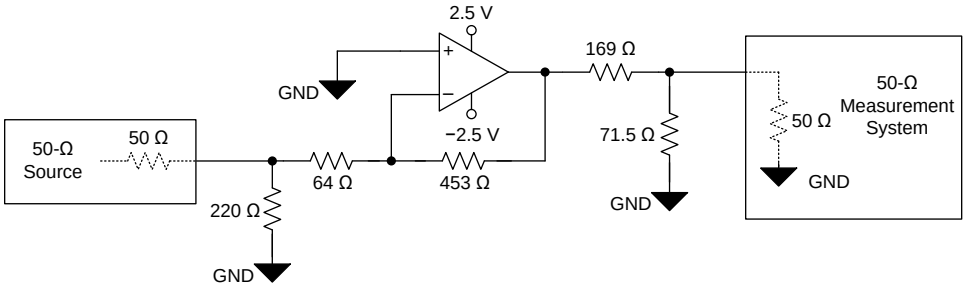

図 44. Inverting Configuration (Gain = –7 V/V)

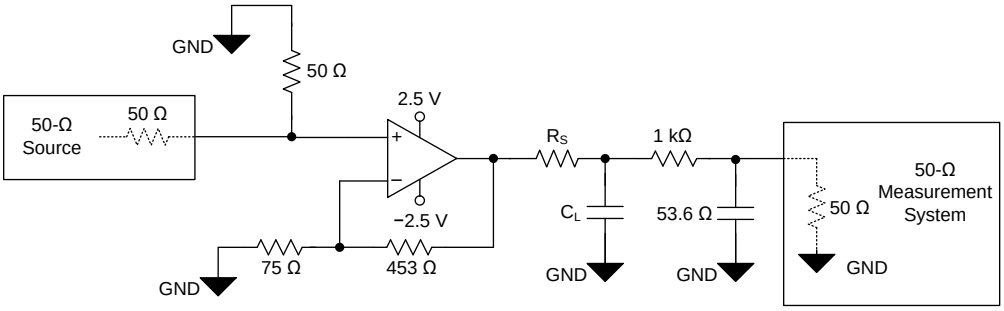

図 45. Capacitive Load Driver Configuration

Copyright © 2018, Texas Instruments Incorporated

9 Detailed Description

9.1 Overview

The ultra-wide, 5.5-GHz gain bandwidth product (GBWP) of the OPA858, combined with the broadband voltage noise of 2.5 nV/√Hz, produces a viable amplifier for wideband transimpedance applications, high-speed data acquisition systems, and applications with weak signal inputs that require low-noise and high-gain front ends. The OPA858 combines multiple features to optimize dynamic performance. In addition to the wide, small-signal bandwidth, the OPA858 has 600 MHz of large signal bandwidth (V_{OUT} = 2 V_{PP}) and a slew rate of 2000 V/µs.

The OPA858 is offered in a 2-mm × 2-mm, 8-pin WSON package that features a feedback (FB) pin for a simple feedback network connection between the amplifiers output and inverting input. Excess capacitance on an amplifiers input pin can reduce phase margin causing instability. This problem is exacerbated in the case of very wideband amplifiers like the OPA858. To reduce the effects of stray capacitance on the input node, the OPA858 pinout features an isolation pin (NC) between the feedback and inverting input pins that increases the physical spacing between them thereby reducing parasitic coupling at high frequencies. The OPA858 also features a very low capacitance input stage with only 0.8-pF of total input capacitance.

9.2 Functional Block Diagram

The OPA858 is a classic, voltage feedback operational amplifier (op amp) with two high-impedance inputs and a low-impedance output. Standard application circuits are supported, like the two basic options shown in 図 46 and 図 47. The DC operating point for each configuration is level-shifted by the reference voltage (V_{REF}), which is typically set to midsupply in single-supply operation. V_{REF} is typically connected to ground in split-supply applications.

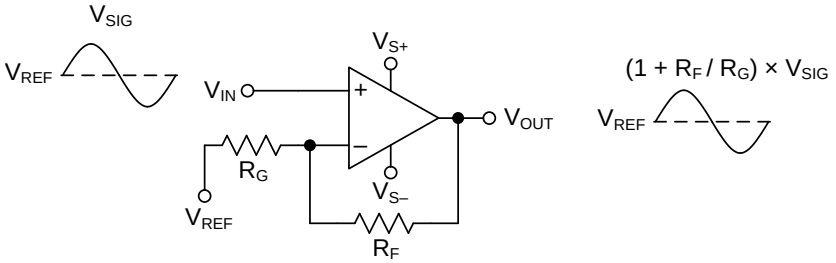

図 46. Noninverting Amplifier

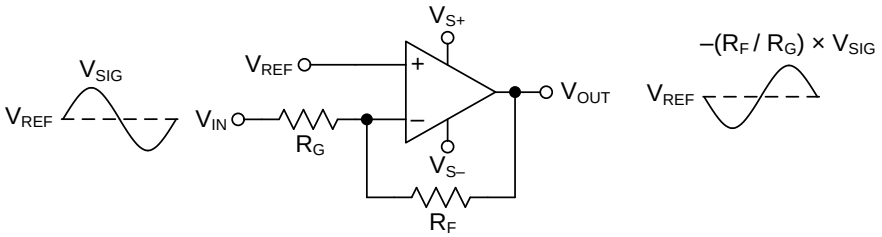

図 47. Inverting Amplifier

9.3 Feature Description

9.3.1 Input and ESD Protection

The OPA858 is fabricated on a low-voltage, high-speed, BiCMOS process. The internal, junction breakdown voltages are low for these small geometry devices, and as a result, all device pins are protected with internal ESD protection diodes to the power supplies as 図 48 shows. There are two antiparallel diodes between the inputs of the amplifier that clamp the inputs during an overrange or fault condition.

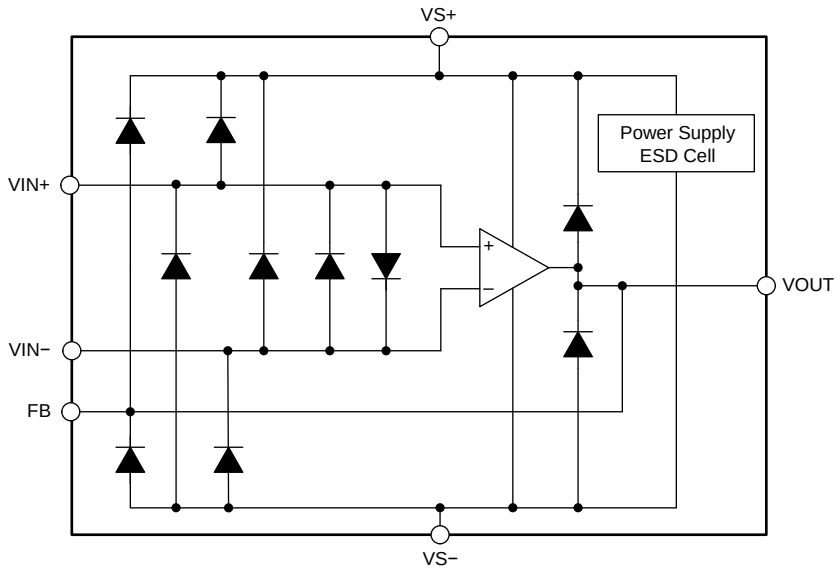

図 48. Internal ESD Structure

9.3.2 Feedback Pin

The OPA858 pin layout is optimized to minimize parasitic inductance and capacitance, which is critical in high-speed analog design. The FB pin (pin 1) is internally connected to the output of the amplifier. The FB pin is separated from the inverting input of the amplifier (pin 3) by a no connect (NC) pin (pin 2). The NC pin must be left floating. There are two advantages to this pin layout:

1. A feedback resistor (R_F) can connect between the FB and IN– pin on the same side of the package (see 図 49) rather than going around the package.
2. The isolation created by the NC pin minimizes the capacitive coupling between the FB and IN– pins by increasing the physical separation between the pins.

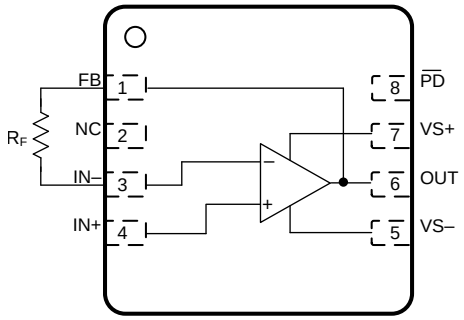

図 49. R_F Connection Between FB and IN– Pins

Copyright © 2018, Texas Instruments Incorporated

Feature Description (continued)

9.3.3 Wide Gain-Bandwidth Product

図 10 shows the open-loop magnitude and phase response of the OPA858. Calculate the gain bandwidth product of any op amp by determining the frequency at which the A_{OL} is 60 dB and multiplying that frequency by a factor of 1000. The second pole in the A_{OL} response occurs before the magnitude crosses 0 dB, and the resultant phase margin is less than 0°. This indicates instability at a gain of 0 dB (1 V/V). Amplifiers that are not unity-gain stable are known as decompensated amplifiers. Decompensated amplifiers typically have higher gain-bandwidth product, higher slew rate, and lower voltage noise, compared to a unity-gain stable amplifier with the same amount of quiescent power consumption.

図 50 shows the open-loop magnitude (A_{OL}) of the OPA858 as a function of temperature. The results show minimal variation over temperature. The phase margin of the OPA858 configured in a noise gain of 7 V/V (16.9 dB) is close to 55° across temperature. Similarly 図 51 shows the A_{OL} magnitude of the OPA858 as a function of process variation. The results show the A_{OL} curve for the nominal process corner and the variation one standard deviation from the nominal. The simulated results suggest less than 1° of phase margin difference within a standard deviation of process variation when the amplifier is configured in a gain of 7 V/V.

One of the primary applications for the OPA858 is as a high-speed transimpedance amplifier (TIA), as 図 59 shows. The low-frequency noise gain of a TIA is 0 dB (1 V/V). At high frequencies the ratio of the total input capacitance and the feedback capacitance set the noise gain. To maximize the TIA closed-loop bandwidth, the feedback capacitance is typically smaller than the input capacitance, which implies that the high-frequency noise gain is greater than 0 dB. As a result, op amps configured as TIAs are not required to be unity-gain stable, which makes a decompensated amplifier a viable option for a TIA. *What You Need To Know About Transimpedance Amplifiers – Part 1* and *What You Need To Know About Transimpedance Amplifiers – Part 2* describe transimpedance amplifier compensation in greater detail.

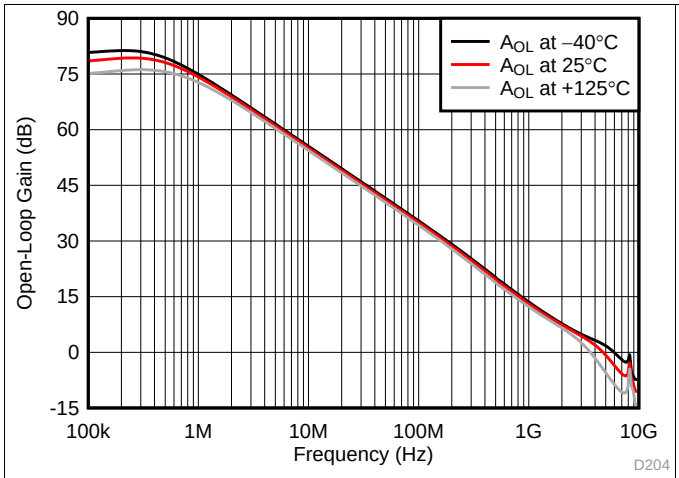

図 50. Open-Loop Gain vs Temperature

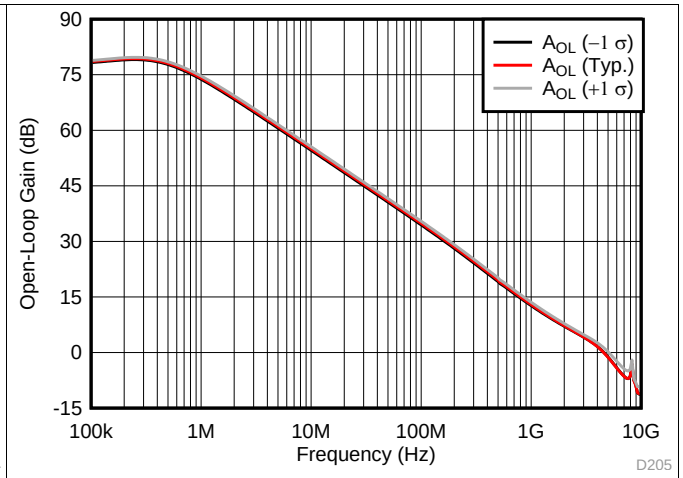

図 51. Open-Loop Gain vs Process Variation

9.3.4 Slew Rate and Output Stage

In addition to wide bandwidth, the OPA858 features a high slew rate of 2000 V/µs . The slew rate is a critical parameter in high-speed pulse applications with narrow sub 10-ns pulses such as Optical Time-Domain Reflectometry (OTDR) and LIDAR. The high slew rate of the OPA858 implies that the device accurately reproduces a 2-V, sub-ns pulse edge as seen in 図 20. The wide bandwidth and slew rate of the OPA858 make it an ideal amplifier for high-speed, signal-chain front ends.

図 52 shows the open-loop output impedance of the OPA858 as a function of frequency. To achieve high slew rates and low output impedance across frequency, the output swing of the OPA858 is limited to approximately 3 V. The OPA858 is typically used in conjunction with high-speed pipeline ADCs and flash ADCs that have limited input ranges. Therefore, the OPA858 output swing range coupled with the class-leading voltage noise specification maximizes the overall dynamic range of the signal chain.

Copyright © 2018, Texas Instruments Incorporated

Feature Description (continued)

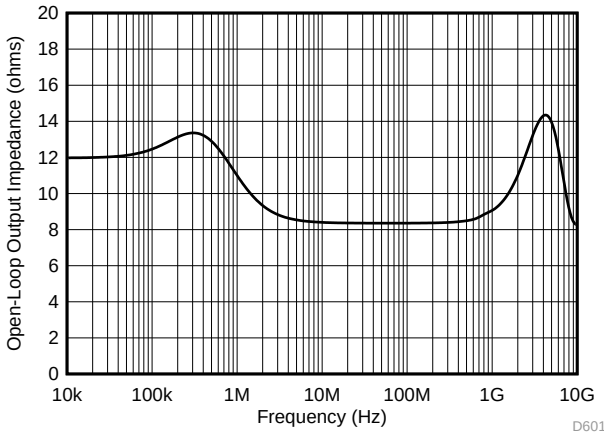

図 52. Open-Loop Output Impedance (Z_{OL}) vs Frequency

9.3.5 Current Noise

The input impedance of CMOS and JFET input amplifiers at low frequencies exceed several GΩs. However, at higher frequencies, the transistors parasitic capacitance to the drain, source, and substrate reduces the impedance. The high impedance at low frequencies eliminates any bias current and the associated shot noise. At higher frequencies, the input current noise increases (see 図 53) as a result of capacitive coupling between the CMOS gate oxide and the underlying transistor channel. This phenomenon is a natural artifact of the construction of the transistor and is unavoidable.

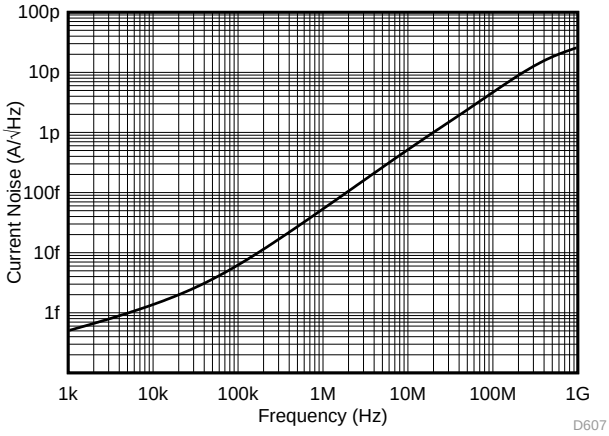

図 53. Input Current Noise (I_{BN} and I_{BI}) vs Frequency

Copyright © 2018, Texas Instruments Incorporated

9.4 Device Functional Modes

9.4.1 Split-Supply and Single-Supply Operation

The OPA858 can be configured with single-sided supplies or split-supplies as shown in 図 63. Split-supply operation using balanced supplies with the input common-mode set to ground eases lab testing because most signal generators, network analyzers, spectrum analyzers, and other lab equipment typically reference inputs and outputs to ground. Split-supply operation is preferred in systems where the signals swing around ground. However, the system requires two supply rails. In split-supply operation, the thermal pad must be connected to the negative supply.

Newer systems use a single power supply to improve efficiency and reduce the cost of the extra power supply. The OPA858 can be used with a single positive supply (negative supply at ground) with no change in performance if the input common-mode and output swing are biased within the linear operation of the device. To change the circuit from a split-supply to a single-supply configuration, level shift all the voltages by half the difference between the power supply rails. In this case, the thermal pad must be connected to ground.

9.4.2 Power-Down Mode

The OPA858 features a power-down mode to reduce the quiescent current to conserve power. 図 23 and 図 24 show the transient response of the OPA858 as the $\overline{PD}$ pin toggles between the disabled and enabled states.

The $\overline{PD}$ disable and enable threshold voltages are with reference to the negative supply. If the amplifier is configured with the positive supply at 3.3 V and the negative supply at ground, then the disable and enable threshold voltages are 0.65 V and 1.8 V, respectively. If the amplifier is configured with ±1.65-V supplies, then the disable and enable threshold voltages are at –1 V and 0.15 V, respectively. If the amplifier is configured with ±2.5-V supplies, then the threshold voltages are at –1.85 V and –0.7 V.

図 54 shows the switching behavior of a typical amplifier as the $\overline{PD}$ pin is swept down from the enabled state to the disabled state. Similarly 図 55 shows the switching behavior of a typical amplifier as the $\overline{PD}$ pin is swept up from the disabled state to the enabled state. The small difference in the switching thresholds between the down sweep and the up sweep is due to the hysteresis designed into the amplifier to increase its immunity to noise on the $\overline{PD}$ pin.

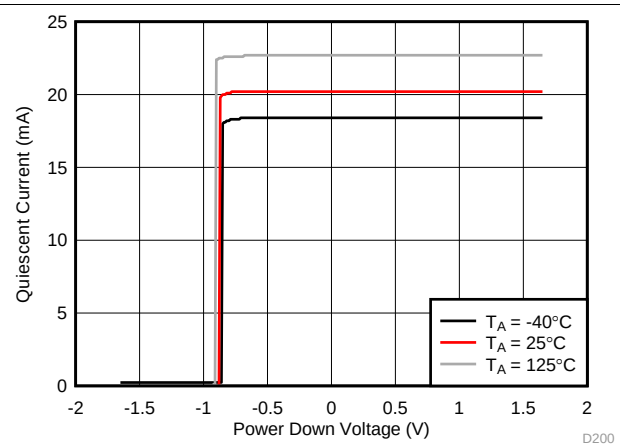

図 54. Switching Threshold ($\overline{PD}$ Pin Swept from HIGH to LOW)

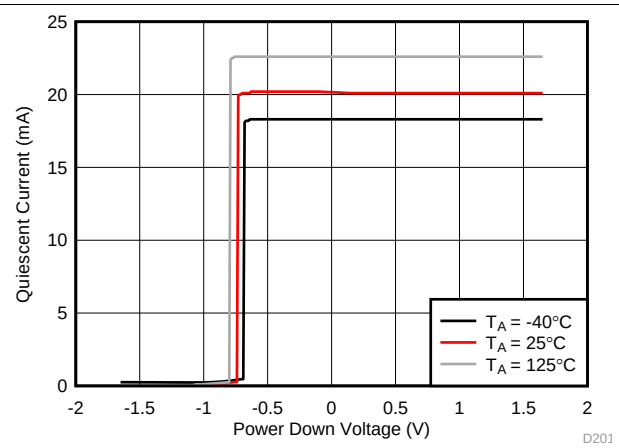

図 55. Switching Threshold ($\overline{PD}$ Pin Swept from LOW to HIGH)

Connecting the $\overline{PD}$ pin low disables the amplifier and places the output in a high-impedance state. When the amplifier is configured as a noninverting amplifier, the feedback (R_F) and gain (R_G) resistor network form a parallel load to the output of the amplifier. To protect the input stage of the amplifier, the OPA858 uses internal, back-to-back protection diodes between the inverting and noninverting input pins as 図 48 shows. When the differential voltage between the input pins of the amplifier exceeds a diode voltage drop, an additional low-impedance path is created between the inputs.

Copyright © 2018, Texas Instruments Incorporated

10 Application and Implementation

注

Information in the following applications sections is not part of the TI component specification, and TI does not warrant its accuracy or completeness. TI's customers are responsible for determining suitability of components for their purposes. Customers should validate and test their design implementation to confirm system functionality.

10.1 Application Information

10.1.1 Using the OPA858 as a Transimpedance Amplifier

The OPA858 design has been optimized to meet the industry's growing demand for wideband, low-noise photodiode amplifiers. The closed-loop bandwidth of a transimpedance amplifier is a function of the following:

1. The total input capacitance. This includes the photodiode capacitance, input capacitance of the amplifier (common-mode and differential capacitance) and any stray capacitance from the PCB.
2. The op amp gain bandwidth product (GBWP), and,
3. The transimpedance gain R_F.

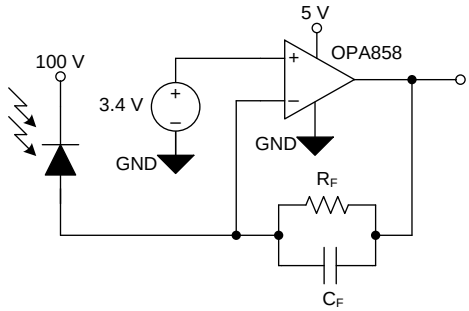

図 56. Transimpedance Amplifier Circuit

図 56 shows the OPA858 configured as a TIA with the avalanche photodiode (APD) reverse biased such that its cathode is tied to a large positive bias voltage. In this configuration the APD sources current into the op amp feedback loop so that the output swings in a negative direction relative to the input common-mode voltage. To maximize the output swing in the negative direction, the OPA858 common-mode is set close to the positive limit, 1.6 V from the positive supply rail.

The feedback resistance R_F and the input capacitance form a zero in the noise gain that results in instability if left unchecked. To counteract the effect of the zero, a pole is inserted by adding the feedback capacitor (C_F.) into the noise gain transfer function. The *Transimpedance Considerations for High-Speed Amplifiers* application report discusses theories and equations that show how to compensate a transimpedance amplifier for a particular gain and input capacitance. The bandwidth and compensation equations from the application report are available in a Microsoft Excel ™ calculator. *What You Need To Know About Transimpedance Amplifiers – Part 1* provides a link to the calculator.

Copyright © 2018, Texas Instruments Incorporated

Application Information (continued)

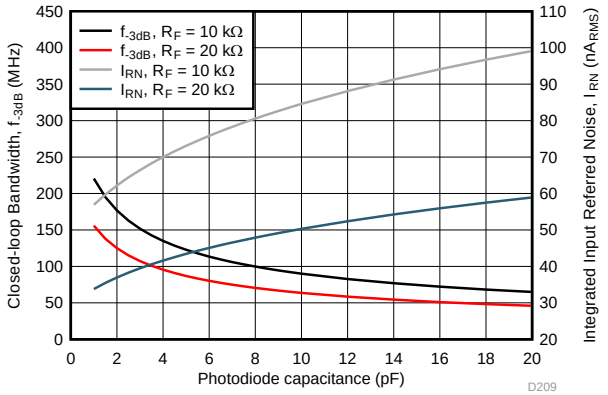

図 57. Bandwidth and Noise Performance vs Photodiode Capacitance

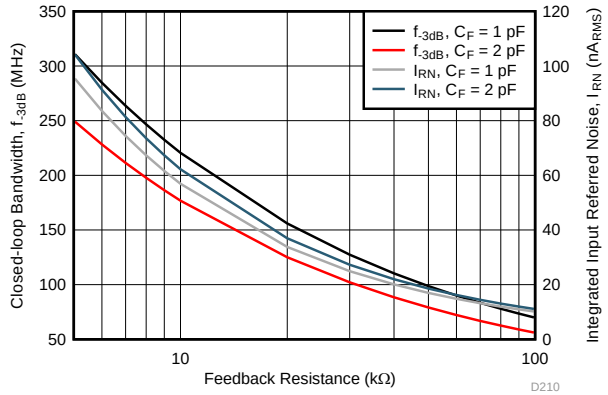

図 58. Bandwidth and Noise Performance vs Feedback Resistance

The equations and calculators in the application report and blog posts referenced above are used to model the bandwidth (f_{-3dB}) and noise (I_{RN}) performance of the OPA858 configured as a TIA. The resultant performance is shown in 図 57 and 図 58. The left side Y-axis shows the closed-loop bandwidth performance, while the right side of the graph shows the integrated input referred noise. The noise bandwidth to calculate I_{RN}, for a fixed R_F and C_{PD} is set equal to the f_{-3dB} frequency.

図 57 shows the amplifier performance as a function of photodiode capacitance (C_{PD}) for R_F = 10 kΩ and 20 kΩ. Increasing C_{PD} decreases the closed-loop bandwidth. It is vital to reduce any stray parasitic capacitance from the PCB to maximize bandwidth. The OPA858 is designed with 0.8 pF of total input capacitance to minimize the effect on system performance.

図 58 shows the amplifier performance as a function of R_F for C_{PD} = 1 pF and 2 pF. Increasing R_F results in lower bandwidth. To maximize the signal-to-noise ratio (SNR) in an optical front-end system, maximize the gain in the TIA stage. Increasing R_F by a factor of "X" increases the signal level by "X", but only increases the resistor noise contribution by "$\sqrt{X}$", thereby improving SNR.

10.2 Typical Application

The high GBWP, low input voltage noise and high slew rate of the OPA858 makes the device a viable wideband, high input impedance voltage amplifier.

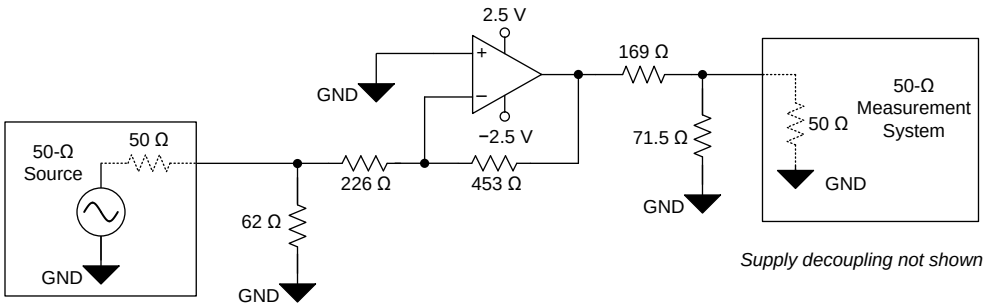

図 59. OPA858 in a Gain of –2V/V (No Noise Gain Shaping)

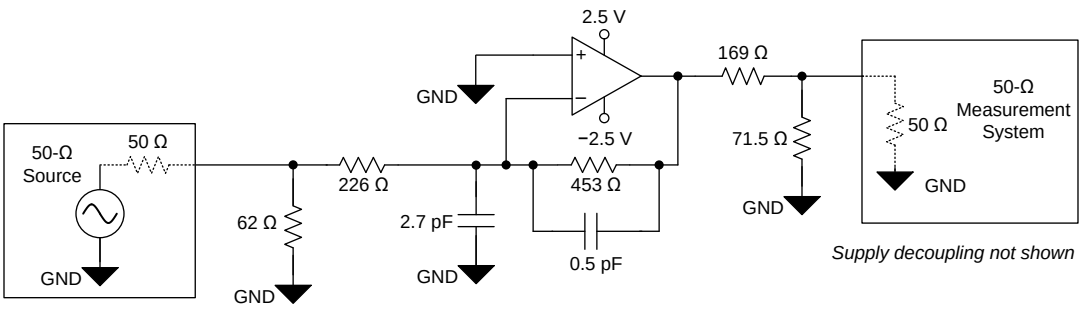

図 60. OPA858 in a Gain of –2V/V (With Noise Gain Shaping)

10.2.1 Design Requirements

Design a high-bandwidth, high-gain, voltage amplifier with the design requirements listed in 表 1. An inverting amplifier configuration is chosen here; however, the theory is applicable to a noninverting configuration as well. In an inverting configuration the signal gain and noise gain transfer functions are not equal, unlike the noninverting configuration.

表 1. Design Requirements

TARGET BANDWIDTH (MHz)	SIGNAL GAIN (V/V)	FEEDBACK RESISTANCE (Ω)	FREQUENCY PEAKING (dB)
> 750	–2	453	< 2

10.2.2 Detailed Design Procedure

The OPA858 is compensated to have less than 1 dB of peaking in a gain of 7 V/V. Using the device in lower gains results in increased peaking and potential instability. 図 59 shows the OPA858 configured in a signal gain of –2 V/V. The DC noise gain (1/β) of the amplifier is affected by the 62-Ω termination resistor and the 50-Ω source resistor and is given by 式 1. At higher frequencies the noise gain is affected by reactive elements such as inductors and capacitors. These include both discrete board components as well as printed circuit board (PCB) parasitics.

$$\text{Noise Gain} = \frac{1}{\beta} = \left(1 + \frac{453\ \Omega}{226\ \Omega + (62\ \Omega \parallel 50\ \Omega)}\right) = 2.79\ \text{V/V} = 5.04\ \text{dB} \tag{1}$$

Copyright © 2018, Texas Instruments Incorporated

The stability and phase margin of the amplifier depend on the loop gain of the amplifier, which is the product of the A_{OL} and the feedback factor (β) of the amplifier. The β of a negative-feedback loop system is the portion of the output signal that is fed back to the input, and in the case of an amplifier is the inverse of the noise gain. The noise gain of the amplifier at high frequencies can be increased by adding an input capacitor and a feedback capacitor as 図 60 shows. If done carefully, increasing 1/β improves the phase margin just as any amplifier is more stable in a high gain configuration versus a unity-gain buffer configuration. The modified network with the added capacitors alters the high-frequency noise gain, but does not alter the signal gain. The *AN-1604 Decompensated Operational Amplifiers* application report provides a detailed analysis of noise gain-shaping techniques for decompensated amplifiers and shows how to choose external resistors and capacitor values.

図 61 shows the uncompensated frequency response of the OPA858 configured as shown in 図 59. Without any added noise gain shaping components, the OPA858 shows approximately 13 dB of peaking.

図 62 shows the noise gain compensated frequency response of the OPA858 configured as shown in 図 60. The noise gain shaping elements reduce the peaking to less than 1.5 dB. The 2.7-pF input capacitor, the input capacitance of the amplifier, the gain resistor, and the feedback resistor create a zero in the noise gain at a frequency *f*, as 式 2 shows.

$$f = \frac{1}{2\pi\left(R_F \,||\, R_G\right)C_{IN}}$$

where

- R_F is the feedback resistor
- R_G is the input or gain resistor (includes the effect of the source and termination resistor)
- C_{IN} is the total input capacitance, which includes the external 2.7-pF capacitor, the amplifier input capacitance, and any parasitic PCB capacitance. (2)

The zero in 式 2 increases the noise gain at higher frequencies, which is important when compensating a decompensated amplifier. However, the noise gain zero reduces the loop gain phase which results in a lower phase margin. To counteract the phase reduction due to the noise gain zero, add a pole to the noise gain curve by inserting the 0.5-pF feedback capacitor. The pole occurs at a frequency shown in 式 3. The noise gain pole and zero locations must be selected so that the rate-of-closure between the magnitude curves of A_{OL} and 1/β is approximately 20 dB. To ensure this, the noise gain pole must occur before the 1/β magnitude curve intersects the A_{OL} magnitude curve. In other words, the noise gain pole must occur before $|A_{OL}| = |1/\beta|$. The point at which the two curves intersect is known as the loop gain crossover frequency.

$$f = \frac{1}{2\pi R_F C_F}$$

where

- C_F is the feedback capacitor (includes any added PCB parasitic) (3)

For more information on op amp stability, watch the *TI Precision Lab series on stability* video.

10.2.3 Application Curves

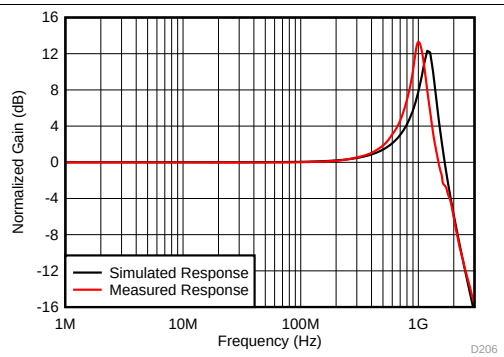

V_{OUT} = 100 mV_{PP}

図 61. Gain = –2 V/V, Uncompensated Frequency Response

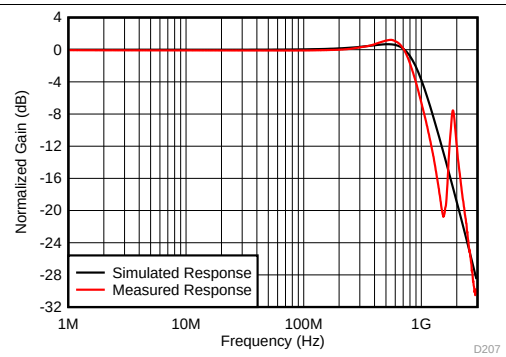

V_{OUT} = 100 mV_{PP}

図 62. Gain = –2 V/V, Compensated Frequency Response

11 Power Supply Recommendations

The OPA858 operates on supplies from 3.3 V to 5.25 V. The OPA858 operates on single-sided supplies, split and balanced bipolar supplies, and unbalanced bipolar supplies. Because the OPA858 does not feature rail-to-rail inputs or outputs, the input common-mode and output swing ranges are limited at 3.3-V supplies.

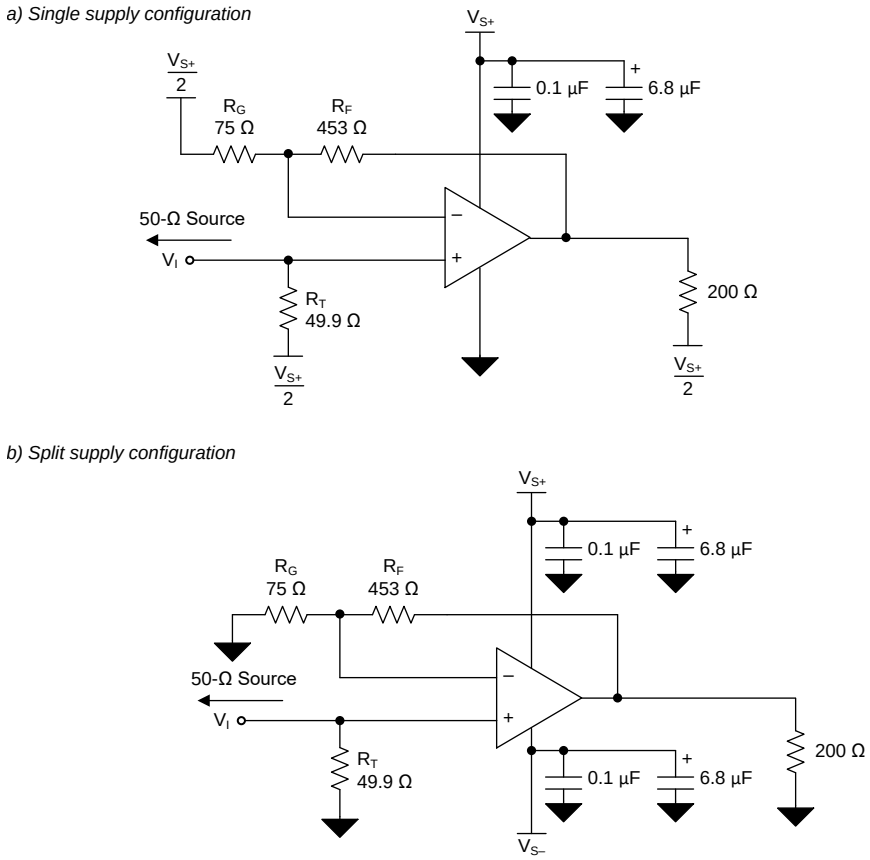

図 63. Split and Single Supply Circuit Configuration

Copyright © 2018, Texas Instruments Incorporated

12 Layout

12.1 Layout Guidelines

Achieving optimum performance with a high-frequency amplifier like the OPA858 requires careful attention to board layout parasitics and external component types. Recommendations that optimize performance include:

1. Minimize parasitic capacitance from the signal I/O pins to AC ground. Parasitic capacitance on the output and inverting input pins can cause instability. To reduce unwanted capacitance, TI recommends cutting out the power and ground traces underneath the signal input and output pins. Otherwise, ground and power planes must be unbroken elsewhere on the board. When configuring the amplifier as a TIA, if the required feedback capacitor is under 0.15 pF, consider using two series resistors, each of half the value of a single resistor in the feedback loop to minimize the parasitic capacitance from the resistor.
2. Minimize the distance (less than 0.25") from the power-supply pins to high-frequency bypass capacitors. Use high quality, 100-pF to 0.1-µF, C0G and NPO-type decoupling capacitors with voltage ratings at least three times greater than the amplifiers maximum power supplies to ensure that there is a low-impedance path to the amplifiers power-supply pins across the amplifiers gain bandwidth specification. At the device pins, do not allow the ground and power plane layout to be in close proximity to the signal I/O pins. Avoid narrow power and ground traces to minimize inductance between the pins and the decoupling capacitors. The power-supply connections must always be decoupled with these capacitors. Larger (2.2-µF to 6.8-µF) decoupling capacitors, effective at lower frequency, must be used on the supply pins. These are placed further from the device and are shared among several devices in the same area of the PC board.
3. **Careful selection and placement of external components preserves the high-frequency performance of the OPA858 .** Use low-reactance resistors. Surface-mount resistors work best and allow a tighter overall layout. Never use wirewound resistors in a high-frequency application. Because the output pin and inverting input pin are the most sensitive to parasitic capacitance, always position the feedback and series output resistor, if any, as close to the output pin as possible. Place other network components (such as noninverting input termination resistors) close to the package. Even with a low parasitic capacitance shunting the external resistors, high resistor values create significant time constants that can degrade performance. When configuring the OPA858 as a voltage amplifier, keep resistor values as low as possible and consistent with load driving considerations. Decreasing the resistor values keeps the resistor noise terms low and minimizes the effect of the parasitic capacitance. However, lower resistor values increase the dynamic power consumption because R_F and R_G become part of the output load network of the amplifier.

12.2 Layout Example

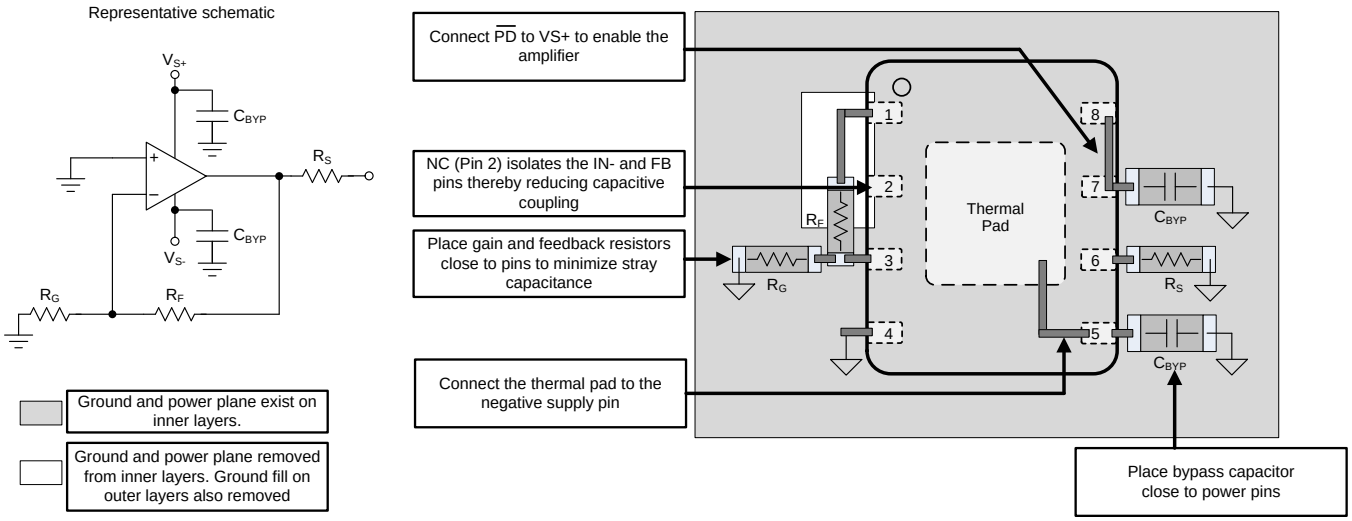

図 64. Layout Recommendation

Layout Example (continued)

When configuring the OPA858 as a transimpedance amplifier additional care must be taken to minimize the inductance between the avalanche photodiode (APD) and the amplifier. Always place the photodiode on the same side of the PCB as the amplifier. Placing the amplifier and the APD on opposite sides of the PCB increases the parasitic effects due to via inductance. APD packaging can be quite large which often requires the APD to be placed further away from the amplifier than ideal. The added distance between the two device results in increased inductance between the APD and op amp feedback network as shown in 図 65. The added inductance is detrimental to a decompensated amplifiers stability since it isolates the APD capacitance from the noise gain transfer function. The noise gain is given by 式 4. The added PCB trace inductance between the feedback network increases the denominator in 式 4 thereby reducing the noise gain and the phase margin. In cases where a leaded APD in a TO can is used inductance should be further minimized by cutting the leads of the TO can as short as possible.

The layout shown in 図 65 can be improved by following some of the guidelines shown in 図 66. The two key rules to follow are:

- Add an isolation resistor R_{ISO} as close as possible to the inverting input of the amplifier. Select the value of R_{ISO} to be between 10 Ω and 20 Ω. The resistor dampens the potential resonance caused by the trace inductance and the amplifiers internal capacitance.
- Close the loop between the feedback elements (R_F and C_F) and R_{ISO} as close to the APD pins as possible. This ensures a more balanced layout and reduces the inductive isolation between the APD and the feedback network.

$$\text{Noise Gain} = \left(1 + \frac{Z_F}{Z_{IN}}\right)$$

where

- Z_F is the total impedance of the feedback network.
- Z_{IN} is the total impedance of the input network. (4)

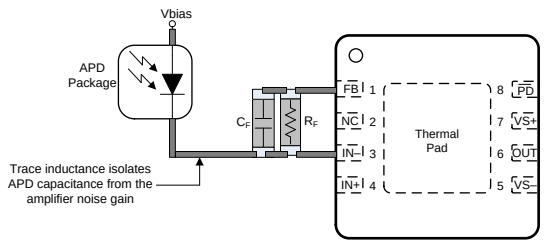

図 65. Non-Ideal TIA Layout

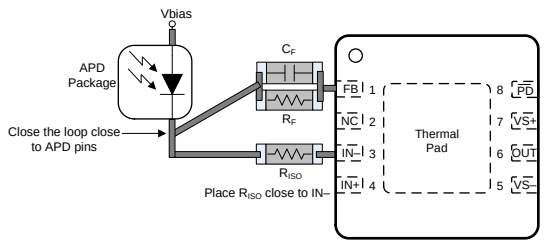

図 66. Improved TIA Layout

Copyright © 2018, Texas Instruments Incorporated

13 デバイスおよびドキュメントのサポート

13.1 ドキュメントの更新通知を受け取る方法

ドキュメントの更新についての通知を受け取るには、ti.comのデバイス製品フォルダを開いてください。右上の隅にある「*通知を受け取る*」をクリックして登録すると、変更されたすべての製品情報に関するダイジェストを毎週受け取れます。変更の詳細については、修正されたドキュメントに含まれている改訂履歴をご覧ください。

13.2 コミュニティ・リソース

The following links connect to TI community resources. Linked contents are provided "AS IS" by the respective contributors. They do not constitute TI specifications and do not necessarily reflect TI's views; see TI's Terms of Use.

TI E2E™オンライン・コミュニティ ***TIのE2E（Engineer-to-Engineer）コミュニティ。***エンジニア間の共同作業を促進するために開設されたものです。e2e.ti.comでは、他のエンジニアに質問し、知識を共有し、アイディアを検討して、問題解決に役立てることができます。

設計サポート ***TIの設計サポート*** 役に立つE2Eフォーラムや、設計サポート・ツールをすばやく見つけることができます。技術サポート用の連絡先情報も参照できます。

13.3 商標

E2E is a trademark of Texas Instruments.
is a trademark of ~Microsoft Corporation.

13.4 静電気放電に関する注意事項

すべての集積回路は、適切なESD保護方法を用いて、取扱いと保存を行うようにして下さい。

静電気放電はわずかな性能の低下から完全なデバイスの故障に至るまで、様々な損傷を与えます。高精度の集積回路は、損傷に対して敏感であり、極めてわずかなパラメータの変化により、デバイスに規定された仕様に適合しなくなる場合があります。

13.5 Glossary

SLYZ022 — *TI Glossary*.

This glossary lists and explains terms, acronyms, and definitions.

14 メカニカル、パッケージ、および注文情報

以降のページには、メカニカル、パッケージ、および注文に関する情報が記載されています。この情報は、そのデバイスについて利用可能な最新のデータです。このデータは予告なく変更されることがあり、ドキュメントが改訂される場合もあります。本データシートのブラウザ版を使用されている場合は、画面左側の説明をご覧ください。

Copyright © 2018, Texas Instruments Incorporated

PACKAGING INFORMATION

Orderable part number	Status (1)	Material type (2)	Package | Pins	Package qty | Carrier	RoHS (3)	Lead finish/ Ball material (4)	MSL rating/ Peak reflow (5)	Op temp (°C)	Part marking (6)
OPA858IDSGR	Active	Production	WSON (DSG) | 8	3000 | LARGE T&R	Yes	NIPDAU	Level-1-260C-UNLIM	-40 to 125	X858
OPA858IDSGR.B	Active	Production	WSON (DSG) | 8	3000 | LARGE T&R	Yes	NIPDAU	Level-1-260C-UNLIM	-40 to 125	X858
OPA858IDSGT	Active	Production	WSON (DSG) | 8	250 | SMALL T&R	Yes	NIPDAU	Level-1-260C-UNLIM	-40 to 125	X858
OPA858IDSGT.B	Active	Production	WSON (DSG) | 8	250 | SMALL T&R	Yes	NIPDAU	Level-1-260C-UNLIM	-40 to 125	X858
OPA858YR	Active	Production	DIESALE (Y) | 0	3000 | LARGE T&R	Yes	Call TI	N/A for Pkg Type	-40 to 125	

(1) **Status:** For more details on status, see our product life cycle.

(2) **Material type:** When designated, preproduction parts are prototypes/experimental devices, and are not yet approved or released for full production. Testing and final process, including without limitation quality assurance, reliability performance testing, and/or process qualification, may not yet be complete, and this item is subject to further changes or possible discontinuation. If available for ordering, purchases will be subject to an additional waiver at checkout, and are intended for early internal evaluation purposes only. These items are sold without warranties of any kind.

(3) **RoHS values:** Yes, No, RoHS Exempt. See the TI RoHS Statement for additional information and value definition.

(4) **Lead finish/Ball material:** Parts may have multiple material finish options. Finish options are separated by a vertical ruled line. Lead finish/Ball material values may wrap to two lines if the finish value exceeds the maximum column width.

(5) **MSL rating/Peak reflow:** The moisture sensitivity level ratings and peak solder (reflow) temperatures. In the event that a part has multiple moisture sensitivity ratings, only the lowest level per JEDEC standards is shown. Refer to the shipping label for the actual reflow temperature that will be used to mount the part to the printed circuit board.

(6) **Part marking:** There may be an additional marking, which relates to the logo, the lot trace code information, or the environmental category of the part.

Multiple part markings will be inside parentheses. Only one part marking contained in parentheses and separated by a "~" will appear on a part. If a line is indented then it is a continuation of the previous line and the two combined represent the entire part marking for that device.

Important Information and Disclaimer: The information provided on this page represents TI's knowledge and belief as of the date that it is provided. TI bases its knowledge and belief on information provided by third parties, and makes no representation or warranty as to the accuracy of such information. Efforts are underway to better integrate information from third parties. TI has taken and continues to take reasonable steps to provide representative and accurate information but may not have conducted destructive testing or chemical analysis on incoming materials and chemicals. TI and TI suppliers consider certain information to be proprietary, and thus CAS numbers and other limited information may not be available for release.

In no event shall TI's liability arising out of such information exceed the total purchase price of the TI part(s) at issue in this document sold by TI to Customer on an annual basis.

OTHER QUALIFIED VERSIONS OF OPA858 :

- Automotive : OPA858-Q1

NOTE: Qualified Version Definitions:

- Automotive - Q100 devices qualified for high-reliability automotive applications targeting zero defects

TAPE AND REEL INFORMATION

REEL DIMENSIONS

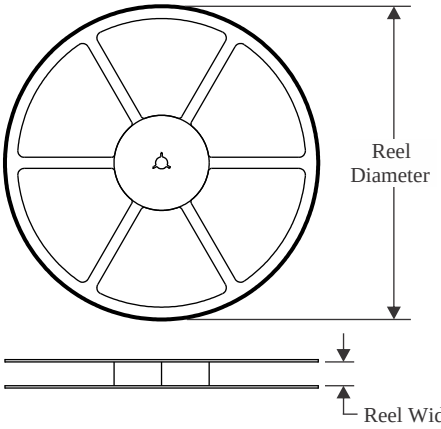

TAPE DIMENSIONS

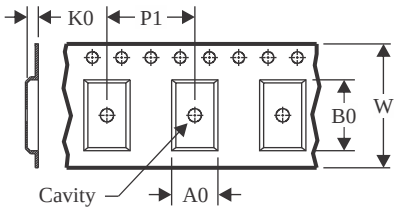

A0	Dimension designed to accommodate the component width
B0	Dimension designed to accommodate the component length
K0	Dimension designed to accommodate the component thickness
W	Overall width of the carrier tape
P1	Pitch between successive cavity centers

QUADRANT ASSIGNMENTS FOR PIN 1 ORIENTATION IN TAPE

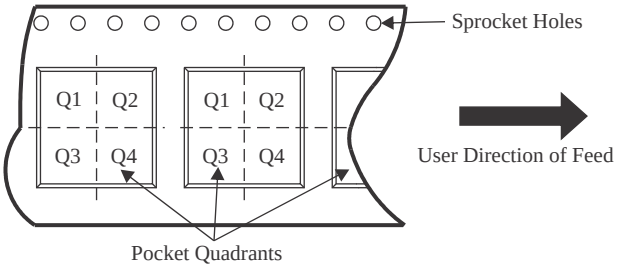

*All dimensions are nominal

Device	Package Type	Package Drawing	Pins	SPQ	Reel Diameter (mm)	Reel Width W1 (mm)	A0 (mm)	B0 (mm)	K0 (mm)	P1 (mm)	W (mm)	Pin1 Quadrant
OPA858IDSGR	WSON	DSG	8	3000	180.0	8.4	2.3	2.3	1.15	4.0	8.0	Q2
OPA858IDSGT	WSON	DSG	8	250	180.0	8.4	2.3	2.3	1.15	4.0	8.0	Q2
OPA858YR	DIESALE	Y	0	3000	180.0	8.4	0.74	0.78	0.45	4.0	8.0	Q1

TAPE AND REEL BOX DIMENSIONS

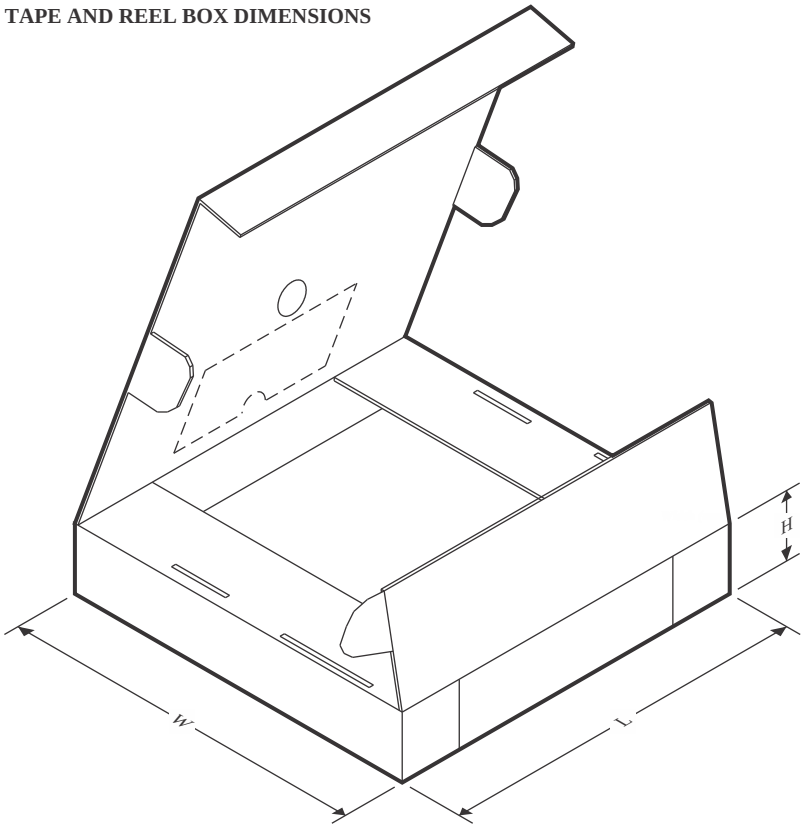

*All dimensions are nominal

Device	Package Type	Package Drawing	Pins	SPQ	Length (mm)	Width (mm)	Height (mm)
OPA858IDSGR	WSON	DSG	8	3000	210.0	185.0	35.0
OPA858IDSGT	WSON	DSG	8	250	210.0	185.0	35.0
OPA858YR	DIESALE	Y	0	3000	210.0	185.0	35.0

GENERIC PACKAGE VIEW

DSG 8

WSON - 0.8 mm max height

2 x 2, 0.5 mm pitch

PLASTIC SMALL OUTLINE - NO LEAD

This image is a representation of the package family, actual package may vary.
Refer to the product data sheet for package details.

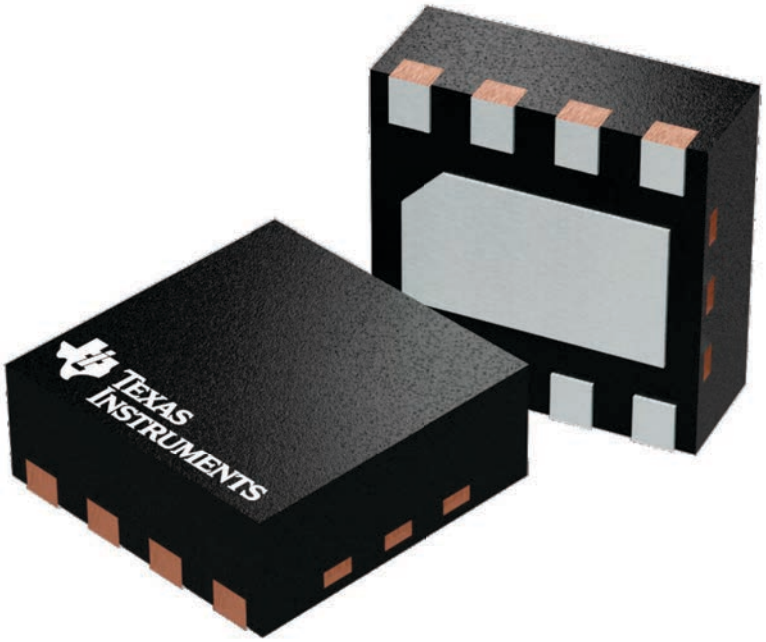

4224783/A

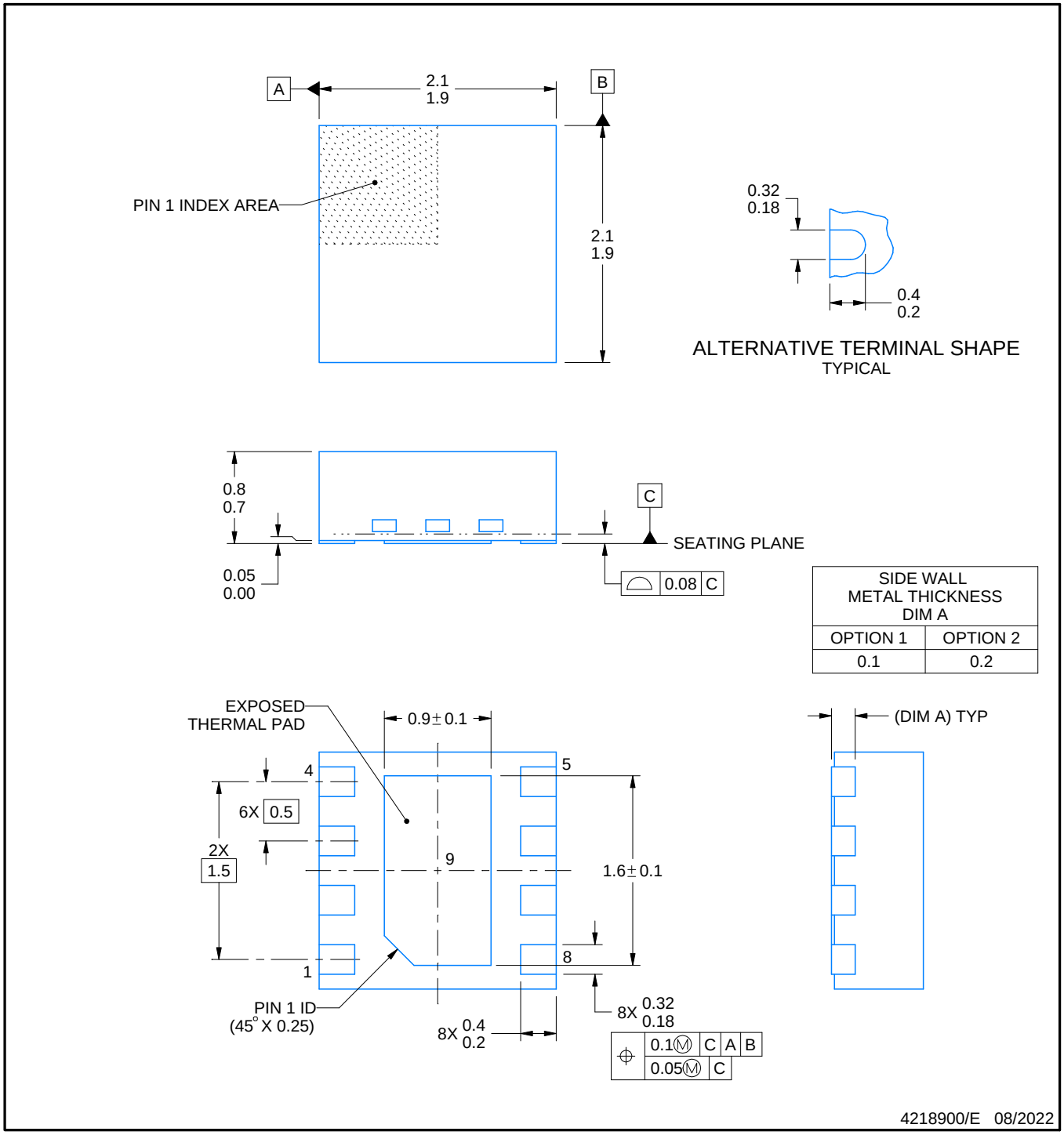

NOTES:

1. All linear dimensions are in millimeters. Any dimensions in parenthesis are for reference only. Dimensioning and tolerancing per ASME Y14.5M.
2. This drawing is subject to change without notice.
3. The package thermal pad must be soldered to the printed circuit board for thermal and mechanical performance.

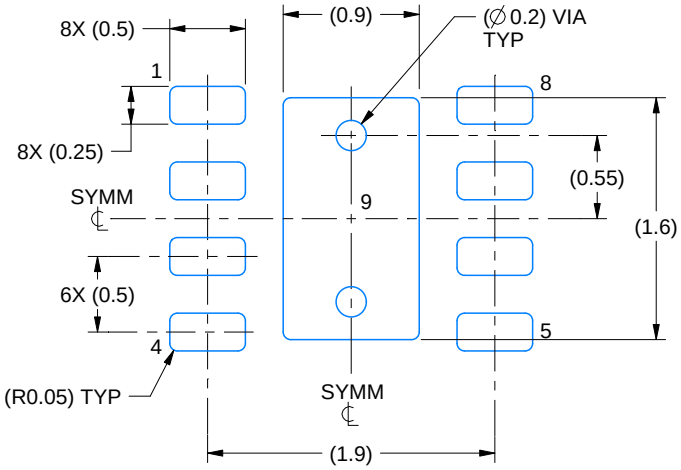

LAND PATTERN EXAMPLE
SCALE:20X

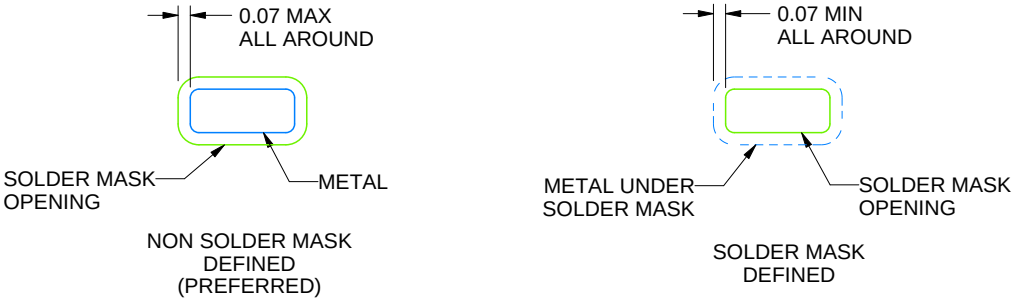

SOLDER MASK DETAILS

4218900/E 08/2022

NOTES: (continued)

4. This package is designed to be soldered to a thermal pad on the board. For more information, see Texas Instruments literature number SLUA271 (www.ti.com/lit/slua271).
5. Vias are optional depending on application, refer to device data sheet. If any vias are implemented, refer to their locations shown on this view. It is recommended that vias under paste be filled, plugged or tented.

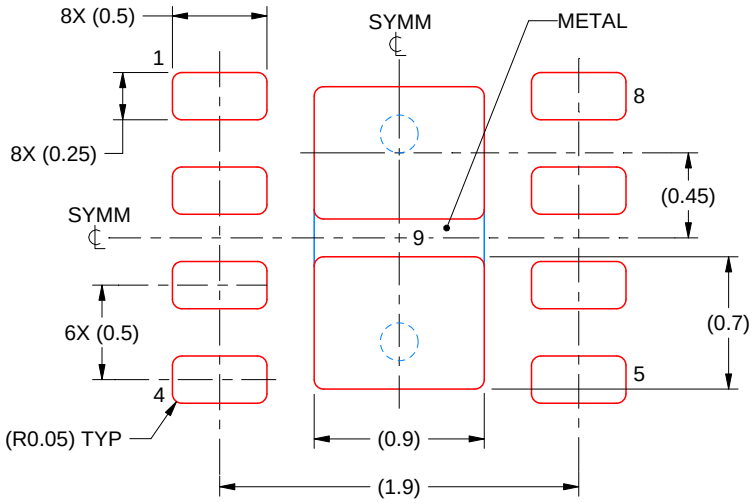

SOLDER PASTE EXAMPLE
BASED ON 0.125 mm THICK STENCIL

EXPOSED PAD 9:
87% PRINTED SOLDER COVERAGE BY AREA UNDER PACKAGE
SCALE:25X

4218900/E 08/2022

NOTES: (continued)

6. Laser cutting apertures with trapezoidal walls and rounded corners may offer better paste release. IPC-7525 may have alternate design recommendations.

重要なお知らせと免責事項

テキサス· インスツルメンツは、技術データと信頼性データ (データシートを含みます)、設計リソース (リファレンス デザインを含みます)、アプリケーションや設計に関する各種アドバイス、Web ツール、安全性情報、その他のリソースを、欠陥が存在する可能性のある「現状のまま」提供しており、商品性および特定目的に対する適合性の黙示保証、第三者の知的財産権の非侵害保証を含むいかなる保証も、明示的または黙示的にかかわらず拒否します。

これらのリソースは、 テキサス· インスツルメンツ製品を使用する設計の経験を積んだ開発者への提供を意図したものです。(1) お客様のアプリケーションに適した テキサス· インスツルメンツ製品の選定、(2) お客様のアプリケーションの設計、検証、試験、(3) お客様のアプリケーションに該当する各種規格や、その他のあらゆる安全性、セキュリティ、規制、または他の要件への確実な適合に関する責任を、お客様のみが単独で負うものとします。

上記の各種リソースは、予告なく変更される可能性があります。これらのリソースは、リソースで説明されている テキサス· インスツルメンツ製品を使用するアプリケーションの開発の目的でのみ、 テキサス· インスツルメンツはその使用をお客様に許諾します。これらのリソースに関して、他の目的で複製することや掲載することは禁止されています。 テキサス· インスツルメンツや第三者の知的財産権のライセンスが付与されている訳ではありません。お客様は、これらのリソースを自身で使用した結果発生するあらゆる申し立て、損害、費用、損失、責任について、 テキサス· インスツルメンツおよびその代理人を完全に補償するものとし、 テキサス· インスツルメンツは一切の責任を拒否します。

テキサス· インスツルメンツの製品は、 テキサス· インスツルメンツの販売条件、または ti.com やかかる テキサス· インスツルメンツ製品の関連資料などのいずれかを通じて提供する適用可能な条項の下で提供されています。 テキサス· インスツルメンツがこれらのリソースを提供することは、適用される テキサス· インスツルメンツの保証または他の保証の放棄の拡大や変更を意味するものではありません。

お客様がいかなる追加条項または代替条項を提案した場合でも、 テキサス· インスツルメンツはそれらに異議を唱え、拒否します。

郵送先住所：Texas Instruments, Post Office Box 655303, Dallas, Texas 75265
Copyright © 2025, Texas Instruments Incorporated