AM572x Sitara™プロセッサ シリコン・リビジョン2.0

1 デバイスの概要

1.1 特長

- デュアル Arm® Cortex®-A15 マイクロプロセッサ・サブシステム
- 最大 2 つの C66x 浮動小数点 VLIW DSP
  - C67x および C64x+ と完全にオブジェクト・コード互換
  - サイクルごとに最大 32 回の 16 × 16 ビット固定小数点乗算
- 最大 2.5MB のオンチップ L3 RAM
- 2 つの DDR3/DDR3L メモリ・インターフェイス (EMIF) モジュール
  - DDR3-1066 までをサポート
  - EMIF ごとに最大 2GB をサポート
- 2 つの デュアル Arm® Cortex®-M4 コプロセッサ (IPU1 と IPU2)
- 最大 4 つの組み込みビジョン・エンジン (EVE)
- IVA-HD サブシステム
  - H.264 CODECで4K @ 15fpsのエンコードおよびデコードのサポート
  - 他の CODEC は最大 1080p60
- ディスプレイ・サブシステム
  - フル HD ビデオ (1920 × 1080p、60fps)
  - 複数のビデオ入力とビデオ出力
  - 2D および 3D グラフィックス
  - DMA エンジンを搭載し、最大 3 つのパイプラインを持つディスプレイ・コントローラ
  - HDMI®エンコーダ：HDMI 1.4a および DVI 1.0 準拠
- 2 つのデュアルコア・プログラマブル・リアルタイム・ユニットおよび産業用通信サブシステム (PRU-ICSS)
- 2D グラフィック・アクセラレータ (BB2D) サブシステム
  - Vivante®GC320 コア
- ビデオ・プロセッシング・エンジン (VPE)
- デュアル・コア PowerVR®SGX544™ 3D GPU
- 暗号化ハードウェア・アクセラレータ
  - AES、SHA、RNG、DES、3DES
- 3 つのビデオ入力ポート (VIP) モジュール
- 汎用メモリ・コントローラ (GPMC)
- 拡張ダイレクト・メモリ・アクセス (EDMA) コントローラ
- 2 ポートのギガビット・イーサネット (GMAC)
- 16 個の 32 ビット汎用タイマ
- 32 ビット MPU ウォッチドッグ・タイマ
- 5 つの I²C™(Inter-Integrated Circuit) ポート
- HDQ™/ 1-Wire®インターフェイス
- 10 個の構成可能な UART/IrDA/CIR モジュール
- 4 つのマルチチャネル・シリアル・ペリフェラル・インターフェイス (McSPI)
- クワッド SPI インターフェイス(QSPI)
- SATA Gen2 インターフェイス
- 8 つのマルチチャネル・オーディオ・シリアル・ポート (McASP) モジュール
- SuperSpeed USB 3.0 デュアル・ロール・デバイス
- High-Speed USB 2.0 デュアル・ロール・デバイス
- 4 つのマルチメディア・カード / セキュア・デジタル / セキュア・デジタル入出力インターフェイス (MMC™/ SD®/SDIO)
- PCI-Express®3.0 サブシステム、2 つの 5Gbps レーン
  - 1 つの 2 レーン Gen2 準拠ポート
  - または 2 つの 1 レーン Gen2 準拠ポート
- デュアル・コントローラ・エリア・ネットワーク (DCAN) モジュール
  - CAN 2.0B プロトコル
- 最大 247 の汎用 I/O (GPIO) ピン
- 電源、リセット、クロック管理 (PRCM) モジュール
- CTools テクノロジによるオンチップ・デバッグ
- 28nm CMOS テクノロジ
- 23mm × 23mm、0.8mm ピッチ、760 ピン BGA (ABC)

英語版のTI製品についての情報を翻訳したこの資料は、製品の概要を確認する目的で便宜的に提供しているものです。該当する正式な英語版の最新情報は、www.ti.comで閲覧でき、その内容が常に優先されます。TIでは翻訳の正確性および妥当性につきましては一切保証いたしません。実際の設計などの前には、必ず最新版の英語版をご参照くださいますようお願いいたします。

1.2 アプリケーション

- 産業用通信
- ヒューマン・マシン・インターフェイス (HMI)
- オートメーションおよび制御
- 高性能アプリケーション
- アナリティクス
- その他の汎用

1.3 概要

AM572x Sitara™Arm アプリケーション・プロセッサは、今日の組み込み製品に求められる高度な処理の要求を満たすために開発された製品です。

AM572xデバイスは、完全に統合された混在プロセッサ・ソリューションの最高の柔軟性により、高い処理性能を実現します。このデバイスには、プログラム可能なビデオ処理と、高度に統合されたペリフェラル・セットも組み込まれています。すべてのAM572xデバイスで、暗号化アクセラレーションを使用できます。

デュアル・コアの Arm® Cortex®-A15 RISC CPU と Arm® Neon™ 拡張機能、2 つの TI C66x VLIW 浮動小数点 DSP コア、Vision AccelerationPac (4 つの EVE を搭載) により、プログラムが可能です。Arm を使って、DSP およびコプロセッサ上でプログラムされるその他のアルゴリズムから制御機能を分けて開発することで、システム・ソフトウェアをシンプルにできます。

さらに、TIはArmおよびC66x DSP用に完全な開発ツールのセットを提供しており、Cコンパイラのほか、DSPアセンブリ・オプティマイザなどを使用してプログラミングとスケジューリングを簡素化し、デバッグ・インターフェイスによってソースコードの実行を見通すことができます。

製品情報(1)

型番	パッケージ	本体サイズ
AM5729ABC	FCBGA (760)	23.0mm×23.0mm
AM5728ABC	FCBGA (760)	23.0mm×23.0mm
AM5726ABC	FCBGA (760)	23.0mm×23.0mm

(1) 詳細については、10、「*メカニカル、パッケージ、および注文情報*」を参照してください。

Copyright © 2015–2019, Texas Instruments Incorporated

1.4 機能ブロック図

図 1-1 は、デバイスの機能ブロック図です。

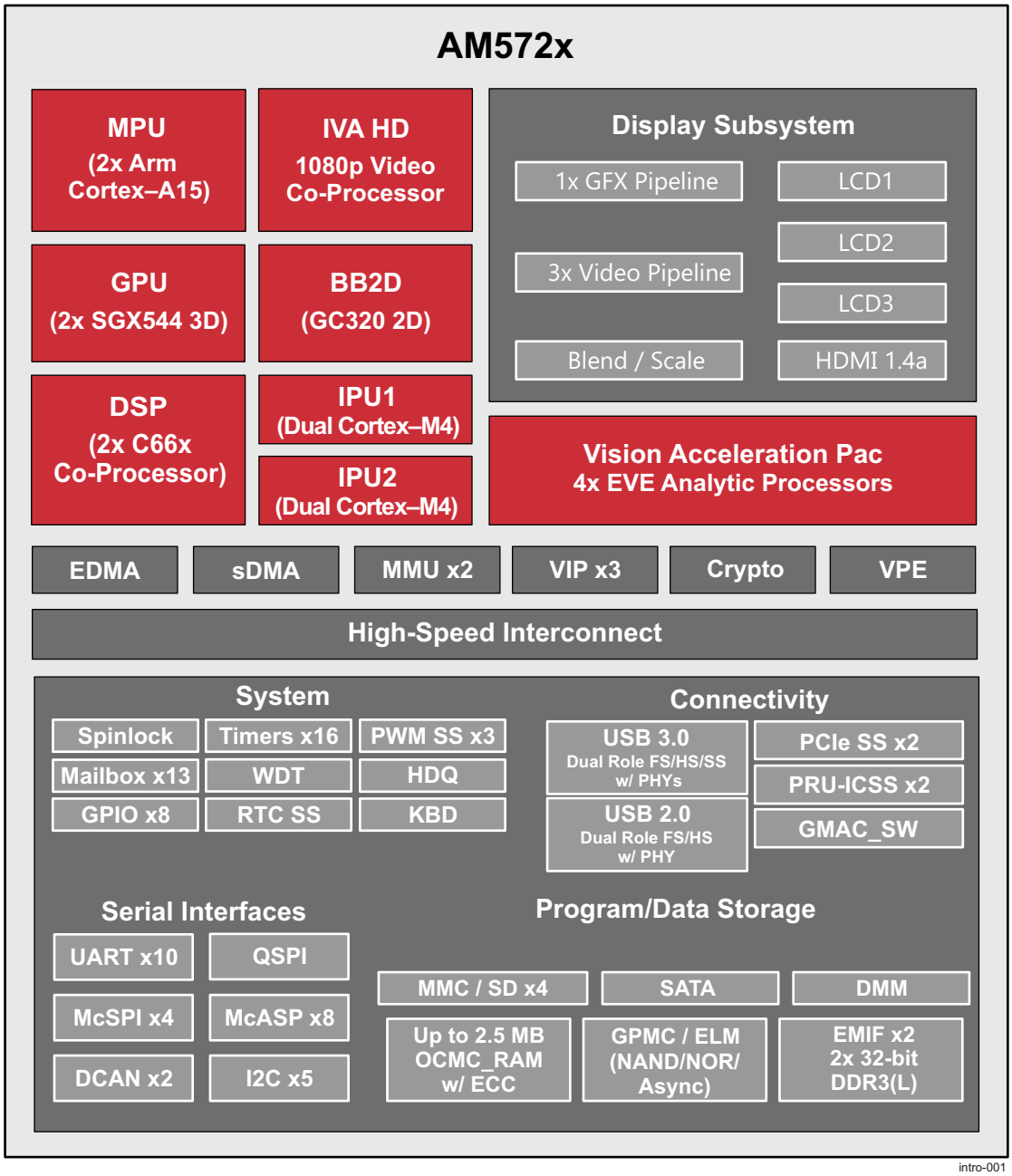

図 1-1. AM572xのブロック図

Table of Contents

1 デバイスの概要 1
1.1 特長 1
1.2 アプリケーション 2
1.3 概要 2
1.4 機能ブロック図 3
2 改訂履歴 5
3 Device Comparison 6
3.1 Related Products 8
4 Terminal Configuration and Functions 9
4.1 Terminal Assignment 9
4.2 Ball Characteristics 10
4.3 Multiplexing Characteristics 89
4.4 Signal Descriptions 109
5 Specifications 157
5.1 Absolute Maximum Ratings 157
5.2 ESD Ratings 158
5.3 Power on Hours (POH) Limits 159
5.4 Recommended Operating Conditions 160
5.5 Operating Performance Points 163
5.6 Power Consumption Summary 182
5.7 Electrical Characteristics 182
5.8 Thermal Characteristics 190
5.9 Power Supply Sequences 192
6 Clock Specifications 197
6.1 Input Clock Specifications 198
6.2 RC On-die Oscillator Clock 206
6.3 DPLLs, DLLs Specifications 207
7 Timing Requirements and Switching Characteristics 211
7.1 Timing Test Conditions 211
7.2 Interface Clock Specifications 211
7.3 Timing Parameters and Information 211
7.4 Recommended Clock and Control Signal Transition Behavior 213
7.5 Virtual and Manual I/O Timing Modes 213
7.6 Video Input Ports (VIP) 216
7.7 Display Subsystem – Video Output Ports 234
7.8 Display Subsystem – High-Definition Multimedia Interface (HDMI) 246
7.9 External Memory Interface (EMIF) 246
7.10 General-Purpose Memory Controller (GPMC) 246
7.11 Timers 268
7.12 Inter-Integrated Circuit Interface (I2C) 269
7.13 HDQ / 1-Wire Interface (HDQ1W) 271
7.14 Universal Asynchronous Receiver Transmitter (UART) 273
7.15 Multichannel Serial Peripheral Interface (McSPI) 275
7.16 Quad Serial Peripheral Interface (QSPI) 281
7.17 Multichannel Audio Serial Port (McASP) 286
7.18 Universal Serial Bus (USB) 305
7.19 Serial Advanced Technology Attachment (SATA) 305
7.20 Peripheral Component Interconnect Express (PCIe) 305
7.21 Controller Area Network Interface (DCAN) 306
7.22 Ethernet Interface (GMAC_SW) 307
7.23 eMMC/SD/SDIO 318
7.24 General-Purpose Interface (GPIO) 344
7.25 Programmable Real-Time Unit Subsystem and Industrial Communication Subsystem (PRU-ICSS) 344
7.26 System and Miscellaneous interfaces 371
7.27 Test Interfaces 371
8 Applications, Implementation, and Layout 375
8.1 Power Supply Mapping 375
8.2 DDR3 Board Design and Layout Guidelines 376
8.3 High Speed Differential Signal Routing Guidance 399
8.4 Power Distribution Network Implementation Guidance 399
8.5 Thermal Solution Guidance 399
8.6 Single-Ended Interfaces 399
8.7 LJCB_REFN/P Connections 401
8.8 Clock Routing Guidelines 402
9 Device and Documentation Support 404
9.1 Device Nomenclature 404
9.2 Tools and Software 406
9.3 Documentation Support 407
9.4 Related Links 407
9.5 Community Resources 407
9.6 商標 407
9.7 静電気放電に関する注意事項 408
9.8 Glossary 408
10 Mechanical, Packaging, and Orderable Information 409
10.1 Packaging Information 409

Copyright © 2015–2019, Texas Instruments Incorporated

2 改訂履歴

2018年10月16日発行分から2019年05月15日発行分への変更 (from E Revision (October 2018) to F Revision) **Page**

- 1.2、「アプリケーション」に「アナリティクス」を追加 2
- 「製品情報」表に AM5729 の詳細を追加 2
- Added AM5729 details in 表 3-1, *Device Comparison* 6
- Fixed type direction to “O” for mii1_txer and mii0_txer signals in 表 4-20, *GMAC Signal Descriptions* 131
- Added AM5729 details in 表 5-5, 表 5-8 and 表 5-9 163
- Added MII_TXER timing to GMAC MII Timings section 309
- Updated MDIO Timing Diagram and MDIO7 parameter values 310
- Added note regarding DDR ECC solutions to 表 8-3, *Supported DDR3 Device Combinations* 377
- Added clarifications about validated DDR topology in 8.2.2.15, *CK and ADDR_CTRL Topologies and Routing Definition* 386
- Updated a note for cosmetic marks on the package 404
- Added AM5729 details in 表 9-1 405

3 Device Comparison

表 3-1 shows a comparison between AM572x devices, highlighting the differences. For a comparison of the full AM57xx family of devices, refer to Parametric Table.

表 3-1. Device Comparison

FEATURES			DEVICE		
			AM5729	AM5728	AM5726
Features					
CTRL_WKUP_STD_FUSE_DIE_ID_2[31:24] Base PN register bitfield value [5]			AM5729: 78 (0x4E)	AM5728: 59 (0x3B)	AM5726: 57 (0x39)
			AM5729- E: 62 (0x3E)	AM5728- E: 60 (0x3C)	AM5726- E: 58 (0x3A)
Processors/ Accelerators					
Speed Grades				See 表 5-5	
Dual Arm Cortex-A15 Microprocessor Subsystem (MPU)		MPU core 0	Yes	Yes	Yes
		MPU core 1	Yes	Yes	Yes
C66x VLIW DSP		DSP1	Yes	Yes	Yes
		DSP2	Yes	Yes	Yes
BitBLT 2D Hardware Acceleration Engine (BB2D)		BB2D	Yes	Yes	Not Supported [1]
Display Subsystem		VOUT1	Yes	Yes	Not Supported [1]
		VOUT2	Yes	Yes	Not Supported [1]
		VOUT3	Yes	Yes	Not Supported [1]
		HDMI	Yes	Yes	Not Supported [1]
Embedded Vision Engine (EVE)		EVE1	Yes[6]	Not Supported [1]	
		EVE2	Yes[6]	Not Supported [1]	
		EVE3	Yes[6]	Not Supported [1]	
		EVE4	Yes[6]	Not Supported [1]	
Dual Arm Cortex-M4 Image Processing Unit (IPU)		IPU1	Yes	Yes	Yes
		IPU2	Yes	Yes	Yes
Image Video Accelarator (IVA)		IVA	Yes	Yes	Not Supported [1]
SGX544 Dual-Core 3D Graphics Processing Unit (GPU)		GPU	Yes	Yes	Not Supported [1]
Video Input Port (VIP)	VIP1	vin1a	Yes	Yes	Yes
		vin1b	Yes	Yes	Yes
		vin2a	Yes	Yes	Yes
		vin2b	Yes	Yes	Yes
	VIP2	vin3a	Yes	Yes	Yes
		vin3b	Yes	Yes	Yes
		vin4a	Yes	Yes	Yes
		vin4b	Yes	Yes	Yes
	VIP3	vin5a	Yes	Yes	Yes
		vin6a	Yes	Yes	Yes
Video Processing Engine (VPE)		VPE	Yes	Yes	Yes
Program/Data Storage					
On-Chip Shared Memory (RAM)		OCMC_RAM	2.5MB	2.5MB	2.5MB
General-Purpose Memory Controller (GPMC)		GPMC	Yes	Yes	Yes
DDR3 Memory Controller [2]		EMIF1	up to 2GB	up to 2GB	up to 2GB
		EMIF2	up to 2GB	up to 2GB	up to 2GB
Dynamic Memory Manager (DMM)		DMM	Yes	Yes	Yes
Radio Support					

Copyright © 2015–2019, Texas Instruments Incorporated

表 3-1. Device Comparison (continued)

FEATURES		DEVICE		
		AM5729	AM5728	AM5726
Audio Tracking Logic (ATL)	ATL	Not Supported (1)		
Viterbi Coprocessor (VCP)	VCP1	Not Supported (1)		
	VCP2	Not Supported (1)		
Peripherals				
Dual Controller Area Network Interface (DCAN)	DCAN1	Yes	Yes	Yes
	DCAN2	Yes	Yes	Yes
Enhanced DMA (EDMA)	EDMA	Yes	Yes	Yes
System DMA (DMA_SYSTEM)	DMA_SYSTEM	Yes	Yes	Yes
Ethernet Subsystem (Ethernet SS)	GMAC_SW[0]	MII, RMII, or RGMII	MII, RMII, or RGMII	MII, RMII, or RGMII
	GMAC_SW[1]	MII, RMII, or RGMII	MII, RMII, or RGMII	MII, RMII, or RGMII
General-Purpose I/O (GPIO)	GPIO	up to 247	up to 247	up to 247
Inter-Integrated Circuit Interface (I^2C)	I2C	5	5	5
System Mailbox Module	MAILBOX	13	13	13
Media Local Bus Subsystem (MLB) (3)	MLB	Not Supported (1)		
Multichannel Audio Serial Port (McASP)	McASP1	16 serializers	16 serializers	16 serializers
	McASP2	16 serializers	16 serializers	16 serializers
	McASP3	4 serializers	4 serializers	4 serializers
	McASP4	4 serializers	4 serializers	4 serializers
	McASP5	4 serializers	4 serializers	4 serializers
	McASP6	4 serializers	4 serializers	4 serializers
	McASP7	4 serializers	4 serializers	4 serializers
	McASP8	4 serializers	4 serializers	4 serializers
MultiMedia Card/Secure Digital/Secure Digital Input Output Interface (MMC/SD/SDIO)	MMC1	1x UHSI 4b	1x UHSI 4b	1x UHSI 4b
	MMC2	1x eMMC™ 8b	1x eMMC™ 8b	1x eMMC 8b
	MMC3	1x SDIO 8b	1x SDIO 8b	1x SDIO 8b
	MMC4	1x SDIO 4b	1x SDIO 4b	1x SDIO 4b
PCI Express 3.0 Port with Integrated PHY	PCIe_SS1	Yes	Yes	Yes
	PCIe_SS2	Yes	Yes	Yes
2x Programmable Real-Time Unit Subsystem and Industrial Communication Subsystem (PRU-ICSS)	PRU-ICSS1	Yes	Yes	Yes
	PRU-ICSS2	Yes	Yes	Yes
Serial Advanced Technology Attachment (SATA)	SATA	Yes	Yes	Yes
Real-Time Clock Subsystem (RTCSS)	RTCSS (4)	Yes	Yes	Yes
Multichannel Serial Peripheral Interface (McSPI)	McSPI	4	4	4
HDQ / 1-Wire (HDQ1W)	HDQ1W	Yes	Yes	Yes
Quad SPI (QSPI)	QSPI	Yes	Yes	Yes
Spinlock Module	SPINLOCK	Yes	Yes	Yes
Keyboard Controller (KBD)	KBD	Yes	Yes	Yes
Timers, General-Purpose	TIMER	16	16	16
Timer, Watchdog	WATCHDOG TIMER	Yes	Yes	Yes
Pulse-Width Modulation Subsystem (PWMSS)	PWMSS1	Yes	Yes	Yes
	PWMSS2	Yes	Yes	Yes
	PWMSS3	Yes	Yes	Yes
Universal Asynchronous Receiver/Transmitter (UART)	UART	10	10	10

Copyright © 2015–2019, Texas Instruments Incorporated

表 3-1. Device Comparison (continued)

FEATURES		DEVICE		
		AM5729	AM5728	AM5726
Universal Serial Bus (USB3.0)	USB1 (SuperSpeed, Dual-Role-Device [DRD])	Yes	Yes	Yes
Universal Serial Bus (USB2.0)	USB2 (High-Speed, Dual-Role-Device [DRD], with embedded HS PHY)	Yes	Yes	Yes
	USB3 (High-Speed, OTG2.0, with ULPI)	Not Supported (1)		
	USB4 (High-Speed, OTG2.0, with ULPI)	Not Supported (1)		

(1) Features noted as “not supported,” must not be used. Their functionality is not supported by TI for this family of devices. These features are subject to removal without notice on future device revisions. Any information regarding the unsupported features has been retained in the documentation solely for the purpose of clarifying signal names or for consistency with previous feature descriptions.

(2) In the Unified L3 memory map, there is maximum of 2GB of SDRAM space which is available to all L3 initiators including MPU (MPU, GPU, DSP, IVA, DMA, etc). Typically this space is interleaved across both EMIFs to optimize memory performance. If a system populates > 2GB of physical memory, that additional addressable space can be accessed only by the MPU via the Arm V7 Large Physical Address Extensions (LPAE).

(3) MLB power rails (vdds_mlbp) must be connected to a 1.8V power supply even this feature is not supported.

(4) RTC only mode is not supported feature.

(5) For more details about the CTRL_WKUP_STD_FUSE_DIE_ID_2 register and Base PN bitfield, see the *AM572x Sitara™ Processors Silicon Revision 2.0, 1.1* (SPRUHZ6).

(6) The Embedded Vision Engine (EVE) consumes additional power when enabled. Therefore all designs using the AM5729 device must implement the TPS6590379ZWSR PMIC which provides a separate SMPS output for vdd_dspeve. Please refer to the *TPS659037 User's Guide to Power AM574x, AM572x, and AM571x* (SLIU011) for more information. Be sure to use the Power Estimation Tool (PET) to correctly size your system thermal solution.

3.1 Related Products

Sitara Processors Scalable processors based on Arm® Cortex®-A cores with flexible peripherals, connectivity & unified software support – perfect for sensors to servers.

TI's Arm Cortex-A15 Advantage The Arm Cortex-A15 processor is proven in a range of different markets and is an increasingly popular choice in networking infrastructure, delivering high-performance processing capability combined with low power consumption. The Cortex-A15 processor delivers roughly twice the performance of the Cortex-A9 processor and can achieve 3.5 DMIPS/MHz.

Sitara Applications Sitara™ processors provide scalable solutions for a wide range of applications from HMIs and gateways to more complex equipment such as drives and substation automation equipment. Sitara Arm® processors offer scalability and reliability as well as multi-protocol support for industrial communication protocols such as EtherCAT, Ethernet/IP and Profinet.

Reference Designs TI provides many reference designs containing ‘building block’ solutions to enable customers to rapidly development of their unique products and solutions.

Companion Products for AM572x Review products that are frequently purchased or used in conjunction with this product.

Copyright © 2015–2019, Texas Instruments Incorporated

4 Terminal Configuration and Functions

4.1 Terminal Assignment

図 4-1 shows the ball locations for the 760 plastic ball grid array (PBGA) package and are used in conjunction with 表 4-2 through 表 4-34 to locate signal names and ball grid numbers.

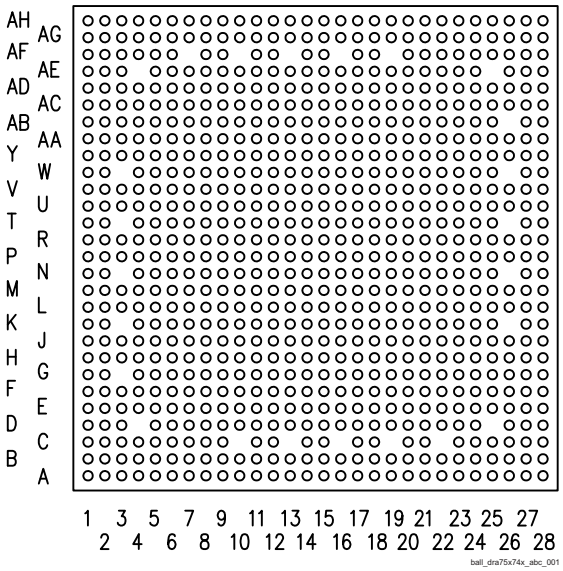

図 4-1. ABC S-PBGA-N760 Package (Bottom View)

注: The following bottom balls are not connected: AF7 / AF10 / AF13 / AF16 / AF19 / AE4 / AE25 / AB26 / W3 / W26 / T3 / T26 / N3 / N26 / K3 / K26 / G3 / D4 / D25 / C10 / C13 / C16 / C19 / C22.

These balls do not exist on the package.

4.1.1 Unused Balls Connection Requirements

This section describes the Unused/Reserved balls connection requirements.

注: The following balls are reserved: Y5 / Y10 / K14 / B28 /A27

These balls must be left unconnected.

注: All unused power supply balls must be supplied with the voltages specified in the 5.4, *Recommended Operating Conditions,* unless alternative tie-off options are included in 4.4, *Signal Descriptions*.

表 4-1. Unused Balls Specific Connection Requirements

BALLS	CONNECTION REQUIREMENTS
AE14 / AE15 / AD17 / AC15 / AC16 / AC17 / AB16 / V27 / D20 / AH25 / AE27 / AD27 / Y28 / G28 / H27 / K27 / M28	These balls must be connected to GND through an external pull resistor if unused
V28 / F18 / E20 / E23 / D21 / C20 / C21 / AG25 / AE28 / AD28 / Y27 / G27 / H28 / K28 / M27 / F17 / C25	These balls must be connected to the corresponding power supply through an external pull resistor if unused
AF14 (rtc_iso)	This ball should be connected to the corresponding power supply through an external pull resistor if unused; or can be connected to F22 (porz) when RTC unused (level translation may be needed)

表 4-1. Unused Balls Specific Connection Requirements (continued)

BALLS	CONNECTION REQUIREMENTS
AB17 (rtc_porz)	This ball should be connected to VSS when RTC is unused; or can be connected to F22 (porz) when RTC unused (level translation may be needed)

注: All other unused signal balls **with** a Pad Configuration Register can be left unconnected with their internal pullup or pulldown resistor enabled.

注: All other unused signal balls **without** Pad Configuration Register can be left unconnected.

4.2 Ball Characteristics

表 4-2 describes the terminal characteristics and the signals multiplexed on each ball. The following list describes the table column headers:

1. **BALL NUMBER:** Ball number(s) on the bottom side associated with each signal on the bottom.
2. **BALL NAME:** Mechanical name from package device (name is taken from muxmode 0).
3. **SIGNAL NAME:** Names of signals multiplexed on each ball (also notice that the name of the ball is the signal name in muxmode 0).

   注: 表 4-2 does not consider the subsystem multiplexing signals. Subsystem multiplexing signals are described in 4.4, *Signal Descriptions*.

   注: In the Driver off mode, the buffer is configured in high-impedance.

4. **PN:** This column shows if the functionality is applicable for **AM5726** device. Note that the Ball Characteristics table presents a functionality of super set. If the cell is empty it means that the signal is available in all devices.

   - **Yes** - Functionality is presented in **AM5726**
   - **No** - Functionality is not presented in **AM5726**

   An empty box means Yes.
5. **MUXMODE:** Multiplexing mode number:
   a. MUXMODE 0 is the primary muxmode; this means that when MUXMODE=0, the function mapped on the pin corresponds to the name of the pin. The primary muxmode is not necessarily the default muxmode.

      注: The default muxmode is the mode at the release of the reset; also see the RESET REL. MUXMODE column.

   b. MUXMODE 1 through 15 are possible muxmodes for alternate functions. On each pin, some muxmodes are effectively used for alternate functions, while some muxmodes are not used. Only MUXMODE values which correspond to defined functions should be used.
   c. An empty box means Not Applicable.
6. **TYPE:** Signal type and direction:
   – I = Input
   – O = Output
   – IO = Input or Output
   – D = Open drain
   – DS = Differential Signaling
   – A = Analog

Copyright © 2015–2019, Texas Instruments Incorporated

- PWR = Power
- GND = Ground
- CAP = LDO Capacitor

7. **BALL RESET STATE:** The state of the terminal at power-on reset:
   - drive 0 (OFF): The buffer drives V_{OL} (pulldown or pullup resistor not activated).
   - drive 1 (OFF): The buffer drives V_{OH} (pulldown or pullup resistor not activated).
   - OFF: High-impedance
   - PD: High-impedance with an active pulldown resistor
   - PU: High-impedance with an active pullup resistor
   - An empty box means Not Applicable
8. **BALL RESET REL. STATE:** The state of the terminal at the deactivation of the rstoutn signal (also mapped to the PRCM SYS_WARM_OUT_RST signal).
   - drive 0 (OFF): The buffer drives V_{OL} (pulldown or pullup resistor not activated).
   - drive clk (OFF): The buffer drives a toggling clock (pulldown or pullup resistor not activated).
   - drive 1 (OFF): The buffer drives V_{OH} (pulldown or pullup resistor not activated).
   - OFF: High-impedance
   - PD: High-impedance with an active pulldown resistor
   - PU: High-impedance with an active pullup resistor
   - An empty box means Not Applicable

注: For more information on the CORE_PWRON_RET_RST reset signal and its reset sources, see the Power Reset and Clock Management / PRCM Reset Management Functional Description section of the Device TRM.

---

9. **BALL RESET REL. MUXMODE:** This muxmode is automatically configured at the release of the rstoutn signal (also mapped to the PRCM SYS_WARM_OUT_RST signal).

   An empty box means Not Applicable.
10. **I/O VOLTAGE VALUE**: This column describes the IO voltage value (VDDS supply).

    An empty box means Not Applicable.
11. **POWER:** The voltage supply that powers the terminal IO buffers.

    An empty box means Not Applicable.
12. **HYS:** Indicates if the input buffer is with hysteresis:
    - Yes: With hysteresis
    - No: Without hysteresis
    - An empty box: Not Applicable

注: For more information, see the hysteresis values in 5.7, *Electrical Characteristics*.

---

13. **BUFFER TYPE:** Drive strength of the associated output buffer.

    An empty box means Not Applicable.

注: For programmable buffer strength:
- The default value is given in 表 4-2.
- A note describes all possible values according to the selected muxmode.

---

14. **PULLUP / PULLDOWN TYPE:** Denotes the presence of an internal pullup or pulldown resistor. Pullup and pulldown resistors can be enabled or disabled via software.
    - PU: Internal pullup
    - PD: Internal pulldown
    - PU/PD: Internal pullup and pulldown
    - PUx/PDy: Programmable internal pullup and pulldown
    - PDy: Programmable internal pulldown
    - An empty box means No pull
15. **DSIS:** The deselected input state (DSIS) indicates the state driven on the peripheral input (logic "0",

logic "1", or "PIN" level) when the peripheral pin function is not selected by any of the PINCNTLx registers.

- 0: Logic 0 driven on the peripheral's input signal port.
- 1: Logic 1 driven on the peripheral's input signal port.
- blank: Pin state driven on the peripheral's input signal port.

注: Configuring two pins to the same input signal is not supported as it can yield unexpected results. This can be easily prevented with the proper software configuration (Hi-Z mode is not an input signal).

注: When a pad is set into a multiplexing mode which is not defined by pin multiplexing, that pad's behavior is undefined. This should be avoided.

注意

Not all exposed peripherals are supported on all AM572x devices. For peripherals supported on specific device from AM572x family of products refer to 表 3-1, Device Comparison Table.

注: Some of the DDR1 and DDR2 signals have an additional state change at the release of porz. The state that the signals change to at the release of porz is as follows:

drive 0 (OFF) for: ddr1_csn0, ddr1_ck, ddr1_nck, ddr1_casn, ddr1_rasn, ddr1_wen, ddr1_ba[2:0], ddr1_a[15:0], ddr2_csn0, ddr2_ck, ddr2_nck, ddr2_casn, ddr2_rasn, ddr2_wen, ddr2_ba[2:0], ddr2_a[15:0].

OFF for: ddr1_ecc_d[7:0], ddr1_dqm[3:0], ddr1_dqm_ecc, ddr1_dqs[3:0], ddr1_dqsn[3:0], ddr1_dqs_ecc, ddr1_dqsn_ecc, ddr1_d[31:0], ddr2_dqm[3:0], ddr2_dqs[3:0], ddr2_dqsn[3:0], ddr2_d[31:0].

Copyright © 2015–2019, Texas Instruments Incorporated

表 4-2. Ball Characteristics(1)

BALL NUMBER [1]	BALL NAME [2]	SIGNAL NAME [3]	PN [4]	MUXMODE [5]	TYPE [6]	BALL RESET STATE [7]	BALL RESET REL. STATE [8]	BALL RESET REL. MUXMODE [9]	I/O VOLTAGE VALUE [10]	POWER [11]	HYS [12]	BUFFER TYPE [13]	PULL UP/DOWN TYPE [14]	DSIS [15]
K9	cap_vbbldo_dspeve	cap_vbbldo_dspeve			CAP									
Y14	cap_vbbldo_gpu	cap_vbbldo_gpu			CAP									
R20	cap_vbbldo_iva	cap_vbbldo_iva			CAP									
J16	cap_vbbldo_mpu	cap_vbbldo_mpu			CAP									
L9	cap_vddram_core1	cap_vddram_core1			CAP									
J19	cap_vddram_core2	cap_vddram_core2			CAP									
Y15	cap_vddram_core3	cap_vddram_core3			CAP									
P19	cap_vddram_core4	cap_vddram_core4			CAP									
Y16	cap_vddram_core5	cap_vddram_core5			CAP									
J10	cap_vddram_dspeve1	cap_vddram_dspeve1			CAP									
J9	cap_vddram_dspeve2	cap_vddram_dspeve2			CAP									
Y13	cap_vddram_gpu	cap_vddram_gpu			CAP									
T20	cap_vddram_iva	cap_vddram_iva			CAP									
K16	cap_vddram_mpu1	cap_vddram_mpu1			CAP									
K19	cap_vddram_mpu2	cap_vddram_mpu2			CAP									
G19	dcan1_rx	dcan1_rx		0	IO	PU	PU	15	1.8/3.3	vddshv3	Yes	Dual Voltage LVCMOS	PU/PD	1
		uart8_txd		2	O									
		mmc2_sdwp		3	I									0
		sata1_led		4	O									
		hdmi1_cec	No	6	IO									
		gpio1_15		14	IO									
		Driver off		15	I									
G20	dcan1_tx	dcan1_tx		0	IO	PU	PU	15	1.8/3.3	vddshv3	Yes	Dual Voltage LVCMOS	PU/PD	1
		uart8_rxd		2	I									1
		mmc2_sdcd		3	I									1
		hdmi1_hpd	No	6	I									
		gpio1_14		14	IO									
		Driver off		15	I									
AD20	ddr1_a0	ddr1_a0		0	O	PD	drive 1 (OFF)		1.35/1.5/1.8	vdds_ddr1	No	LVCMOS DDR	Pux/PDy	
AC19	ddr1_a1	ddr1_a1		0	O	PD	drive 1 (OFF)		1.35/1.5/1.8	vdds_ddr1	No	LVCMOS DDR	Pux/PDy	
AD21	ddr1_a10	ddr1_a10		0	O	PD	drive 1 (OFF)		1.35/1.5/1.8	vdds_ddr1	No	LVCMOS DDR	Pux/PDy	
AD22	ddr1_a11	ddr1_a11		0	O	PD	drive 1 (OFF)		1.35/1.5/1.8	vdds_ddr1	No	LVCMOS DDR	Pux/PDy	
AC21	ddr1_a12	ddr1_a12		0	O	PD	drive 1 (OFF)		1.35/1.5/1.8	vdds_ddr1	No	LVCMOS DDR	Pux/PDy	

Copyright © 2015–2019, Texas Instruments Incorporated

表 4-2. Ball Characteristics(1) (continued)

BALL NUMBER [1]	BALL NAME [2]	SIGNAL NAME [3]	PN [4]	MUXMODE [5]	TYPE [6]	BALL RESET STATE [7]	BALL RESET REL. STATE [8]	BALL RESET REL. MUXMODE [9]	I/O VOLTAGE VALUE [10]	POWER [11]	HYS [12]	BUFFER TYPE [13]	PULL UP/DOWN TYPE [14]	DSIS [15]
AF18	ddr1_a13	ddr1_a13		0	O	PD	drive 1 (OFF)		1.35/1.5/1.8	vdds_ddr1	No	LVCMOS DDR	Pux/PDy	
AE17	ddr1_a14	ddr1_a14		0	O	PD	drive 1 (OFF)		1.35/1.5/1.8	vdds_ddr1	No	LVCMOS DDR	Pux/PDy	
AD18	ddr1_a15	ddr1_a15		0	O	PD	drive 1 (OFF)		1.35/1.5/1.8	vdds_ddr1	No	LVCMOS DDR	Pux/PDy	
AC20	ddr1_a2	ddr1_a2		0	O	PD	drive 1 (OFF)		1.35/1.5/1.8	vdds_ddr1	No	LVCMOS DDR	Pux/PDy	
AB19	ddr1_a3	ddr1_a3		0	O	PD	drive 1 (OFF)		1.35/1.5/1.8	vdds_ddr1	No	LVCMOS DDR	Pux/PDy	
AF21	ddr1_a4	ddr1_a4		0	O	PD	drive 1 (OFF)		1.35/1.5/1.8	vdds_ddr1	No	LVCMOS DDR	Pux/PDy	
AH22	ddr1_a5	ddr1_a5		0	O	PD	drive 1 (OFF)		1.35/1.5/1.8	vdds_ddr1	No	LVCMOS DDR	Pux/PDy	
AG23	ddr1_a6	ddr1_a6		0	O	PD	drive 1 (OFF)		1.35/1.5/1.8	vdds_ddr1	No	LVCMOS DDR	Pux/PDy	
AE21	ddr1_a7	ddr1_a7		0	O	PD	drive 1 (OFF)		1.35/1.5/1.8	vdds_ddr1	No	LVCMOS DDR	Pux/PDy	
AF22	ddr1_a8	ddr1_a8		0	O	PD	drive 1 (OFF)		1.35/1.5/1.8	vdds_ddr1	No	LVCMOS DDR	Pux/PDy	
AE22	ddr1_a9	ddr1_a9		0	O	PD	drive 1 (OFF)		1.35/1.5/1.8	vdds_ddr1	No	LVCMOS DDR	Pux/PDy	
AF17	ddr1_ba0	ddr1_ba0		0	O	PD	drive 1 (OFF)		1.35/1.5/1.8	vdds_ddr1	No	LVCMOS DDR	Pux/PDy	
AE18	ddr1_ba1	ddr1_ba1		0	O	PD	drive 1 (OFF)		1.35/1.5/1.8	vdds_ddr1	No	LVCMOS DDR	Pux/PDy	
AB18	ddr1_ba2	ddr1_ba2		0	O	PD	drive 1 (OFF)		1.35/1.5/1.8	vdds_ddr1	No	LVCMOS DDR	Pux/PDy	
AC18	ddr1_casn	ddr1_casn		0	O	PD	drive 1 (OFF)		1.35/1.5/1.8	vdds_ddr1	No	LVCMOS DDR	Pux/PDy	
AG24	ddr1_ck	ddr1_ck		0	O	PD	drive clk (OFF)		1.35/1.5/1.8	vdds_ddr1	No	LVCMOS DDR	Pux/PDy	
AG22	ddr1_cke	ddr1_cke		0	O	PD	drive 0 (OFF)		1.35/1.5/1.8	vdds_ddr1	No	LVCMOS DDR	Pux/PDy	
AH23	ddr1_csn0	ddr1_csn0		0	O	PD	drive 1 (OFF)		1.35/1.5/1.8	vdds_ddr1	No	LVCMOS DDR	Pux/PDy	
AF25	ddr1_d0	ddr1_d0		0	IO	PD	PD		1.35/1.5/1.8	vdds_ddr1	No	LVCMOS DDR	Pux/PDy	
AF26	ddr1_d1	ddr1_d1		0	IO	PD	PD		1.35/1.5/1.8	vdds_ddr1	No	LVCMOS DDR	Pux/PDy	
AG27	ddr1_d10	ddr1_d10		0	IO	PD	PD		1.35/1.5/1.8	vdds_ddr1	No	LVCMOS DDR	Pux/PDy	
AF28	ddr1_d11	ddr1_d11		0	IO	PD	PD		1.35/1.5/1.8	vdds_ddr1	No	LVCMOS DDR	Pux/PDy	
AE26	ddr1_d12	ddr1_d12		0	IO	PD	PD		1.35/1.5/1.8	vdds_ddr1	No	LVCMOS DDR	Pux/PDy	

Copyright © 2015–2019, Texas Instruments Incorporated

表 4-2. Ball Characteristics[(1)] (continued)

BALL NUMBER [1]	BALL NAME [2]	SIGNAL NAME [3]	PN [4]	MUXMODE [5]	TYPE [6]	BALL RESET STATE [7]	BALL RESET REL. STATE [8]	BALL RESET REL. MUXMODE [9]	I/O VOLTAGE VALUE [10]	POWER [11]	HYS [12]	BUFFER TYPE [13]	PULL UP/DOWN TYPE [14]	DSIS [15]
AC25	ddr1_d13	ddr1_d13		0	IO	PD	PD		1.35/1.5/1.8	vdds_ddr1	No	LVCMOS DDR	Pux/PDy	
AC24	ddr1_d14	ddr1_d14		0	IO	PD	PD		1.35/1.5/1.8	vdds_ddr1	No	LVCMOS DDR	Pux/PDy	
AD25	ddr1_d15	ddr1_d15		0	IO	PD	PD		1.35/1.5/1.8	vdds_ddr1	No	LVCMOS DDR	Pux/PDy	
V20	ddr1_d16	ddr1_d16		0	IO	PD	PD		1.35/1.5/1.8	vdds_ddr1	No	LVCMOS DDR	Pux/PDy	
W20	ddr1_d17	ddr1_d17		0	IO	PD	PD		1.35/1.5/1.8	vdds_ddr1	No	LVCMOS DDR	Pux/PDy	
AB28	ddr1_d18	ddr1_d18		0	IO	PD	PD		1.35/1.5/1.8	vdds_ddr1	No	LVCMOS DDR	Pux/PDy	
AC28	ddr1_d19	ddr1_d19		0	IO	PD	PD		1.35/1.5/1.8	vdds_ddr1	No	LVCMOS DDR	Pux/PDy	
AG26	ddr1_d2	ddr1_d2		0	IO	PD	PD		1.35/1.5/1.8	vdds_ddr1	No	LVCMOS DDR	Pux/PDy	
AC27	ddr1_d20	ddr1_d20		0	IO	PD	PD		1.35/1.5/1.8	vdds_ddr1	No	LVCMOS DDR	Pux/PDy	
Y19	ddr1_d21	ddr1_d21		0	IO	PD	PD		1.35/1.5/1.8	vdds_ddr1	No	LVCMOS DDR	Pux/PDy	
AB27	ddr1_d22	ddr1_d22		0	IO	PD	PD		1.35/1.5/1.8	vdds_ddr1	No	LVCMOS DDR	Pux/PDy	
Y20	ddr1_d23	ddr1_d23		0	IO	PD	PD		1.35/1.5/1.8	vdds_ddr1	No	LVCMOS DDR	Pux/PDy	
AA23	ddr1_d24	ddr1_d24		0	IO	PD	PD		1.35/1.5/1.8	vdds_ddr1	No	LVCMOS DDR	Pux/PDy	
Y22	ddr1_d25	ddr1_d25		0	IO	PD	PD		1.35/1.5/1.8	vdds_ddr1	No	LVCMOS DDR	Pux/PDy	
Y23	ddr1_d26	ddr1_d26		0	IO	PD	PD		1.35/1.5/1.8	vdds_ddr1	No	LVCMOS DDR	Pux/PDy	
AA24	ddr1_d27	ddr1_d27		0	IO	PD	PD		1.35/1.5/1.8	vdds_ddr1	No	LVCMOS DDR	Pux/PDy	
Y24	ddr1_d28	ddr1_d28		0	IO	PD	PD		1.35/1.5/1.8	vdds_ddr1	No	LVCMOS DDR	Pux/PDy	
AA26	ddr1_d29	ddr1_d29		0	IO	PD	PD		1.35/1.5/1.8	vdds_ddr1	No	LVCMOS DDR	Pux/PDy	
AH26	ddr1_d3	ddr1_d3		0	IO	PD	PD		1.35/1.5/1.8	vdds_ddr1	No	LVCMOS DDR	Pux/PDy	
AA25	ddr1_d30	ddr1_d30		0	IO	PD	PD		1.35/1.5/1.8	vdds_ddr1	No	LVCMOS DDR	Pux/PDy	
AA28	ddr1_d31	ddr1_d31		0	IO	PD	PD		1.35/1.5/1.8	vdds_ddr1	No	LVCMOS DDR	Pux/PDy	
AF24	ddr1_d4	ddr1_d4		0	IO	PD	PD		1.35/1.5/1.8	vdds_ddr1	No	LVCMOS DDR	Pux/PDy	
AE24	ddr1_d5	ddr1_d5		0	IO	PD	PD		1.35/1.5/1.8	vdds_ddr1	No	LVCMOS DDR	Pux/PDy	

Copyright © 2015–2019, Texas Instruments Incorporated

表 4-2. Ball Characteristics[(1)] (continued)

BALL NUMBER [1]	BALL NAME [2]	SIGNAL NAME [3]	PN [4]	MUXMODE [5]	TYPE [6]	BALL RESET STATE [7]	BALL RESET REL. STATE [8]	BALL RESET REL. MUXMODE [9]	I/O VOLTAGE VALUE [10]	POWER [11]	HYS [12]	BUFFER TYPE [13]	PULL UP/DOWN TYPE [14]	DSIS [15]
AF23	ddr1_d6	ddr1_d6		0	IO	PD	PD		1.35/1.5/1.8	vdds_ddr1	No	LVCMOS DDR	Pux/PDy	
AE23	ddr1_d7	ddr1_d7		0	IO	PD	PD		1.35/1.5/1.8	vdds_ddr1	No	LVCMOS DDR	Pux/PDy	
AC23	ddr1_d8	ddr1_d8		0	IO	PD	PD		1.35/1.5/1.8	vdds_ddr1	No	LVCMOS DDR	Pux/PDy	
AF27	ddr1_d9	ddr1_d9		0	IO	PD	PD		1.35/1.5/1.8	vdds_ddr1	No	LVCMOS DDR	Pux/PDy	
AD23	ddr1_dqm0	ddr1_dqm0		0	O	PD	PD		1.35/1.5/1.8	vdds_ddr1	No	LVCMOS DDR	Pux/PDy	
AB23	ddr1_dqm1	ddr1_dqm1		0	O	PD	PD		1.35/1.5/1.8	vdds_ddr1	No	LVCMOS DDR	Pux/PDy	
AC26	ddr1_dqm2	ddr1_dqm2		0	O	PD	PD		1.35/1.5/1.8	vdds_ddr1	No	LVCMOS DDR	Pux/PDy	
AA27	ddr1_dqm3	ddr1_dqm3		0	O	PD	PD		1.35/1.5/1.8	vdds_ddr1	No	LVCMOS DDR	Pux/PDy	
V26	ddr1_dqm_ecc	ddr1_dqm_ecc		0	O	PD	PD		1.35/1.5/1.8	vdds_ddr1	No	LVCMOS DDR	Pux/PDy	
AH25	ddr1_dqs0	ddr1_dqs0		0	IO	PD	PD		1.35/1.5/1.8	vdds_ddr1		LVCMOS DDR	Pux/PDy	
AE27	ddr1_dqs1	ddr1_dqs1		0	IO	PD	PD		1.35/1.5/1.8	vdds_ddr1		LVCMOS DDR	Pux/PDy	
AD27	ddr1_dqs2	ddr1_dqs2		0	IO	PD	PD		1.35/1.5/1.8	vdds_ddr1		LVCMOS DDR	Pux/PDy	
Y28	ddr1_dqs3	ddr1_dqs3		0	IO	PD	PD		1.35/1.5/1.8	vdds_ddr1		LVCMOS DDR	Pux/PDy	
AG25	ddr1_dqsn0	ddr1_dqsn0		0	IO	PU	PU		1.35/1.5/1.8	vdds_ddr1		LVCMOS DDR	Pux/PDy	
AE28	ddr1_dqsn1	ddr1_dqsn1		0	IO	PU	PU		1.35/1.5/1.8	vdds_ddr1		LVCMOS DDR	Pux/PDy	
AD28	ddr1_dqsn2	ddr1_dqsn2		0	IO	PU	PU		1.35/1.5/1.8	vdds_ddr1		LVCMOS DDR	Pux/PDy	
Y27	ddr1_dqsn3	ddr1_dqsn3		0	IO	PU	PU		1.35/1.5/1.8	vdds_ddr1		LVCMOS DDR	Pux/PDy	
V28	ddr1_dqsn_ecc	ddr1_dqsn_ecc		0	IO	PU	PU		1.35/1.5/1.8	vdds_ddr1		LVCMOS DDR	Pux/PDy	
V27	ddr1_dqs_ecc	ddr1_dqs_ecc		0	IO	PD	PD		1.35/1.5/1.8	vdds_ddr1		LVCMOS DDR	Pux/PDy	
W22	ddr1_ecc_d0	ddr1_ecc_d0		0	IO	PD	PD		1.35/1.5/1.8	vdds_ddr1	No	LVCMOS DDR	Pux/PDy	
V23	ddr1_ecc_d1	ddr1_ecc_d1		0	IO	PD	PD		1.35/1.5/1.8	vdds_ddr1	No	LVCMOS DDR	Pux/PDy	
W19	ddr1_ecc_d2	ddr1_ecc_d2		0	IO	PD	PD		1.35/1.5/1.8	vdds_ddr1	No	LVCMOS DDR	Pux/PDy	
W23	ddr1_ecc_d3	ddr1_ecc_d3		0	IO	PD	PD		1.35/1.5/1.8	vdds_ddr1	No	LVCMOS DDR	Pux/PDy	

Copyright © 2015–2019, Texas Instruments Incorporated

表 4-2. Ball Characteristics[(1)] (continued)

BALL NUMBER [1]	BALL NAME [2]	SIGNAL NAME [3]	PN [4]	MUXMODE [5]	TYPE [6]	BALL RESET STATE [7]	BALL RESET REL. STATE [8]	BALL RESET REL. MUXMODE [9]	I/O VOLTAGE VALUE [10]	POWER [11]	HYS [12]	BUFFER TYPE [13]	PULL UP/DOWN TYPE [14]	DSIS [15]
Y25	ddr1_ecc_d4	ddr1_ecc_d4		0	IO	PD	PD		1.35/1.5/1.8	vdds_ddr1	No	LVCMOS DDR	Pux/PDy	
V24	ddr1_ecc_d5	ddr1_ecc_d5		0	IO	PD	PD		1.35/1.5/1.8	vdds_ddr1	No	LVCMOS DDR	Pux/PDy	
V25	ddr1_ecc_d6	ddr1_ecc_d6		0	IO	PD	PD		1.35/1.5/1.8	vdds_ddr1	No	LVCMOS DDR	Pux/PDy	
Y26	ddr1_ecc_d7	ddr1_ecc_d7		0	IO	PD	PD		1.35/1.5/1.8	vdds_ddr1	No	LVCMOS DDR	Pux/PDy	
AH24	ddr1_nck	ddr1_nck		0	O	PD	drive clk (OFF)		1.35/1.5/1.8	vdds_ddr1	No	LVCMOS DDR	Pux/PDy	
AE20	ddr1_odt0	ddr1_odt0		0	O	PD	drive 0 (OFF)		1.35/1.5/1.8	vdds_ddr1	No	LVCMOS DDR	Pux/PDy	
AF20	ddr1_rasn	ddr1_rasn		0	O	PD	drive 1 (OFF)		1.35/1.5/1.8	vdds_ddr1	No	LVCMOS DDR	Pux/PDy	
AG21	ddr1_rst	ddr1_rst		0	O	PD	drive 0 (OFF)		1.35/1.5/1.8	vdds_ddr1	No	LVCMOS DDR	Pux/PDy	
Y18	ddr1_vref0	ddr1_vref0		0	PWR	OFF	OFF		1.35/1.5/1.8	vdds_ddr1	No	LVCMOS DDR		
AH21	ddr1_wen	ddr1_wen		0	O	PD	drive 1 (OFF)		1.35/1.5/1.8	vdds_ddr1	No	LVCMOS DDR	Pux/PDy	
R25	ddr2_a0	ddr2_a0		0	O	PD	drive 1 (OFF)		1.35/1.5/1.8	vdds_ddr2	No	LVCMOS DDR	Pux/PDy	
R26	ddr2_a1	ddr2_a1		0	O	PD	drive 1 (OFF)		1.35/1.5/1.8	vdds_ddr2	No	LVCMOS DDR	Pux/PDy	
N23	ddr2_a10	ddr2_a10		0	O	PD	drive 1 (OFF)		1.35/1.5/1.8	vdds_ddr2	No	LVCMOS DDR	Pux/PDy	
P26	ddr2_a11	ddr2_a11		0	O	PD	drive 1 (OFF)		1.35/1.5/1.8	vdds_ddr2	No	LVCMOS DDR	Pux/PDy	
N28	ddr2_a12	ddr2_a12		0	O	PD	drive 1 (OFF)		1.35/1.5/1.8	vdds_ddr2	No	LVCMOS DDR	Pux/PDy	
T22	ddr2_a13	ddr2_a13		0	O	PD	drive 1 (OFF)		1.35/1.5/1.8	vdds_ddr2	No	LVCMOS DDR	Pux/PDy	
R22	ddr2_a14	ddr2_a14		0	O	PD	drive 1 (OFF)		1.35/1.5/1.8	vdds_ddr2	No	LVCMOS DDR	Pux/PDy	
U22	ddr2_a15	ddr2_a15		0	O	PD	drive 1 (OFF)		1.35/1.5/1.8	vdds_ddr2	No	LVCMOS DDR	Pux/PDy	
R28	ddr2_a2	ddr2_a2		0	O	PD	drive 1 (OFF)		1.35/1.5/1.8	vdds_ddr2	No	LVCMOS DDR	Pux/PDy	
R27	ddr2_a3	ddr2_a3		0	O	PD	drive 1 (OFF)		1.35/1.5/1.8	vdds_ddr2	No	LVCMOS DDR	Pux/PDy	
P23	ddr2_a4	ddr2_a4		0	O	PD	drive 1 (OFF)		1.35/1.5/1.8	vdds_ddr2	No	LVCMOS DDR	Pux/PDy	
P22	ddr2_a5	ddr2_a5		0	O	PD	drive 1 (OFF)		1.35/1.5/1.8	vdds_ddr2	No	LVCMOS DDR	Pux/PDy	
P25	ddr2_a6	ddr2_a6		0	O	PD	drive 1 (OFF)		1.35/1.5/1.8	vdds_ddr2	No	LVCMOS DDR	Pux/PDy	

Copyright © 2015–2019, Texas Instruments Incorporated

表 4-2. Ball Characteristics[(1)] (continued)

BALL NUMBER [1]	BALL NAME [2]	SIGNAL NAME [3]	PN [4]	MUXMODE [5]	TYPE [6]	BALL RESET STATE [7]	BALL RESET REL. STATE [8]	BALL RESET REL. MUXMODE [9]	I/O VOLTAGE VALUE [10]	POWER [11]	HYS [12]	BUFFER TYPE [13]	PULL UP/DOWN TYPE [14]	DSIS [15]
N20	ddr2_a7	ddr2_a7		0	O	PD	drive 1 (OFF)		1.35/1.5/1.8	vdds_ddr2	No	LVCMOS DDR	Pux/PDy	
P27	ddr2_a8	ddr2_a8		0	O	PD	drive 1 (OFF)		1.35/1.5/1.8	vdds_ddr2	No	LVCMOS DDR	Pux/PDy	
N27	ddr2_a9	ddr2_a9		0	O	PD	drive 1 (OFF)		1.35/1.5/1.8	vdds_ddr2	No	LVCMOS DDR	Pux/PDy	
U23	ddr2_ba0	ddr2_ba0		0	O	PD	drive 1 (OFF)		1.35/1.5/1.8	vdds_ddr2	No	LVCMOS DDR	Pux/PDy	
U27	ddr2_ba1	ddr2_ba1		0	O	PD	drive 1 (OFF)		1.35/1.5/1.8	vdds_ddr2	No	LVCMOS DDR	Pux/PDy	
U26	ddr2_ba2	ddr2_ba2		0	O	PD	drive 1 (OFF)		1.35/1.5/1.8	vdds_ddr2	No	LVCMOS DDR	Pux/PDy	
U28	ddr2_casn	ddr2_casn		0	O	PD	drive 1 (OFF)		1.35/1.5/1.8	vdds_ddr2	No	LVCMOS DDR	Pux/PDy	
T28	ddr2_ck	ddr2_ck		0	O	PD	drive clk (OFF)		1.35/1.5/1.8	vdds_ddr2	No	LVCMOS DDR	Pux/PDy	
U24	ddr2_cke	ddr2_cke		0	O	PD	drive 0 (OFF)		1.35/1.5/1.8	vdds_ddr2	No	LVCMOS DDR	Pux/PDy	
P24	ddr2_csn0	ddr2_csn0		0	O	PD	drive 1 (OFF)		1.35/1.5/1.8	vdds_ddr2	No	LVCMOS DDR	Pux/PDy	
E26	ddr2_d0	ddr2_d0		0	IO	PU	PU		1.35/1.5/1.8	vdds_ddr2	No	LVCMOS DDR	Pux/PDy	
G25	ddr2_d1	ddr2_d1		0	IO	PU	PU		1.35/1.5/1.8	vdds_ddr2	No	LVCMOS DDR	Pux/PDy	
H24	ddr2_d10	ddr2_d10		0	IO	PU	PU		1.35/1.5/1.8	vdds_ddr2	No	LVCMOS DDR	Pux/PDy	
H26	ddr2_d11	ddr2_d11		0	IO	PU	PU		1.35/1.5/1.8	vdds_ddr2	No	LVCMOS DDR	Pux/PDy	
G26	ddr2_d12	ddr2_d12		0	IO	PU	PU		1.35/1.5/1.8	vdds_ddr2	No	LVCMOS DDR	Pux/PDy	
J25	ddr2_d13	ddr2_d13		0	IO	PU	PU		1.35/1.5/1.8	vdds_ddr2	No	LVCMOS DDR	Pux/PDy	
J26	ddr2_d14	ddr2_d14		0	IO	PU	PU		1.35/1.5/1.8	vdds_ddr2	No	LVCMOS DDR	Pux/PDy	
J24	ddr2_d15	ddr2_d15		0	IO	PU	PU		1.35/1.5/1.8	vdds_ddr2	No	LVCMOS DDR	Pux/PDy	
L22	ddr2_d16	ddr2_d16		0	IO	PU	PU		1.35/1.5/1.8	vdds_ddr2	No	LVCMOS DDR	Pux/PDy	
K20	ddr2_d17	ddr2_d17		0	IO	PU	PU		1.35/1.5/1.8	vdds_ddr2	No	LVCMOS DDR	Pux/PDy	
K21	ddr2_d18	ddr2_d18		0	IO	PU	PU		1.35/1.5/1.8	vdds_ddr2	No	LVCMOS DDR	Pux/PDy	
L23	ddr2_d19	ddr2_d19		0	IO	PU	PU		1.35/1.5/1.8	vdds_ddr2	No	LVCMOS DDR	Pux/PDy	
F25	ddr2_d2	ddr2_d2		0	IO	PU	PU		1.35/1.5/1.8	vdds_ddr2	No	LVCMOS DDR	Pux/PDy	

Copyright © 2015–2019, Texas Instruments Incorporated

表 4-2. Ball Characteristics[(1)] (continued)

BALL NUMBER [1]	BALL NAME [2]	SIGNAL NAME [3]	PN [4]	MUXMODE [5]	TYPE [6]	BALL RESET STATE [7]	BALL RESET REL. STATE [8]	BALL RESET REL. MUXMODE [9]	I/O VOLTAGE VALUE [10]	POWER [11]	HYS [12]	BUFFER TYPE [13]	PULL UP/DOWN TYPE [14]	DSIS [15]
L24	ddr2_d20	ddr2_d20		0	IO	PU	PU		1.35/1.5/1.8	vdds_ddr2	No	LVCMOS DDR	Pux/PDy	
J23	ddr2_d21	ddr2_d21		0	IO	PU	PU		1.35/1.5/1.8	vdds_ddr2	No	LVCMOS DDR	Pux/PDy	
K22	ddr2_d22	ddr2_d22		0	IO	PU	PU		1.35/1.5/1.8	vdds_ddr2	No	LVCMOS DDR	Pux/PDy	
J20	ddr2_d23	ddr2_d23		0	IO	PU	PU		1.35/1.5/1.8	vdds_ddr2	No	LVCMOS DDR	Pux/PDy	
L27	ddr2_d24	ddr2_d24		0	IO	PU	PU		1.35/1.5/1.8	vdds_ddr2	No	LVCMOS DDR	Pux/PDy	
L26	ddr2_d25	ddr2_d25		0	IO	PU	PU		1.35/1.5/1.8	vdds_ddr2	No	LVCMOS DDR	Pux/PDy	
L25	ddr2_d26	ddr2_d26		0	IO	PU	PU		1.35/1.5/1.8	vdds_ddr2	No	LVCMOS DDR	Pux/PDy	
L28	ddr2_d27	ddr2_d27		0	IO	PU	PU		1.35/1.5/1.8	vdds_ddr2	No	LVCMOS DDR	Pux/PDy	
M23	ddr2_d28	ddr2_d28		0	IO	PU	PU		1.35/1.5/1.8	vdds_ddr2	No	LVCMOS DDR	Pux/PDy	
M24	ddr2_d29	ddr2_d29		0	IO	PU	PU		1.35/1.5/1.8	vdds_ddr2	No	LVCMOS DDR	Pux/PDy	
F24	ddr2_d3	ddr2_d3		0	IO	PU	PU		1.35/1.5/1.8	vdds_ddr2	No	LVCMOS DDR	Pux/PDy	
M25	ddr2_d30	ddr2_d30		0	IO	PU	PU		1.35/1.5/1.8	vdds_ddr2	No	LVCMOS DDR	Pux/PDy	
M26	ddr2_d31	ddr2_d31		0	IO	PU	PU		1.35/1.5/1.8	vdds_ddr2	No	LVCMOS DDR	Pux/PDy	
F26	ddr2_d4	ddr2_d4		0	IO	PU	PU		1.35/1.5/1.8	vdds_ddr2	No	LVCMOS DDR	Pux/PDy	
F27	ddr2_d5	ddr2_d5		0	IO	PU	PU		1.35/1.5/1.8	vdds_ddr2	No	LVCMOS DDR	Pux/PDy	
E27	ddr2_d6	ddr2_d6		0	IO	PU	PU		1.35/1.5/1.8	vdds_ddr2	No	LVCMOS DDR	Pux/PDy	
E28	ddr2_d7	ddr2_d7		0	IO	PU	PU		1.35/1.5/1.8	vdds_ddr2	No	LVCMOS DDR	Pux/PDy	
H23	ddr2_d8	ddr2_d8		0	IO	PU	PU		1.35/1.5/1.8	vdds_ddr2	No	LVCMOS DDR	Pux/PDy	
H25	ddr2_d9	ddr2_d9		0	IO	PU	PU		1.35/1.5/1.8	vdds_ddr2	No	LVCMOS DDR	Pux/PDy	
F28	ddr2_dqm0	ddr2_dqm0		0	O	PU	PU		1.35/1.5/1.8	vdds_ddr2	No	LVCMOS DDR	Pux/PDy	
G24	ddr2_dqm1	ddr2_dqm1		0	O	PU	PU		1.35/1.5/1.8	vdds_ddr2	No	LVCMOS DDR	Pux/PDy	
K23	ddr2_dqm2	ddr2_dqm2		0	O	PU	PU		1.35/1.5/1.8	vdds_ddr2	No	LVCMOS DDR	Pux/PDy	
M22	ddr2_dqm3	ddr2_dqm3		0	O	PU	PU		1.35/1.5/1.8	vdds_ddr2	No	LVCMOS DDR	Pux/PDy	

Copyright © 2015–2019, Texas Instruments Incorporated

表 4-2. Ball Characteristics(1) (continued)

BALL NUMBER [1]	BALL NAME [2]	SIGNAL NAME [3]	PN [4]	MUXMODE [5]	TYPE [6]	BALL RESET STATE [7]	BALL RESET REL. STATE [8]	BALL RESET REL. MUXMODE [9]	I/O VOLTAGE VALUE [10]	POWER [11]	HYS [12]	BUFFER TYPE [13]	PULL UP/DOWN TYPE [14]	DSIS [15]
G28	ddr2_dqs0	ddr2_dqs0		0	IO	PD	PD		1.35/1.5/1.8	vdds_ddr2		LVCMOS DDR	Pux/PDy	
H27	ddr2_dqs1	ddr2_dqs1		0	IO	PD	PD		1.35/1.5/1.8	vdds_ddr2		LVCMOS DDR	Pux/PDy	
K27	ddr2_dqs2	ddr2_dqs2		0	IO	PD	PD		1.35/1.5/1.8	vdds_ddr2		LVCMOS DDR	Pux/PDy	
M28	ddr2_dqs3	ddr2_dqs3		0	IO	PD	PD		1.35/1.5/1.8	vdds_ddr2		LVCMOS DDR	Pux/PDy	
G27	ddr2_dqsn0	ddr2_dqsn0		0	IO	PU	PU		1.35/1.5/1.8	vdds_ddr2		LVCMOS DDR	Pux/PDy	
H28	ddr2_dqsn1	ddr2_dqsn1		0	IO	PU	PU		1.35/1.5/1.8	vdds_ddr2		LVCMOS DDR	Pux/PDy	
K28	ddr2_dqsn2	ddr2_dqsn2		0	IO	PU	PU		1.35/1.5/1.8	vdds_ddr2		LVCMOS DDR	Pux/PDy	
M27	ddr2_dqsn3	ddr2_dqsn3		0	IO	PU	PU		1.35/1.5/1.8	vdds_ddr2		LVCMOS DDR	Pux/PDy	
T27	ddr2_nck	ddr2_nck		0	O	PD	drive clk (OFF)		1.35/1.5/1.8	vdds_ddr2	No	LVCMOS DDR	Pux/PDy	
R23	ddr2_odt0	ddr2_odt0		0	O	PD	drive 0 (OFF)		1.35/1.5/1.8	vdds_ddr2	No	LVCMOS DDR	Pux/PDy	
T23	ddr2_rasn	ddr2_rasn		0	O	PD	drive 1 (OFF)		1.35/1.5/1.8	vdds_ddr2	No	LVCMOS DDR	Pux/PDy	
R24	ddr2_rst	ddr2_rst		0	O	PD	drive 0 (OFF)		1.35/1.5/1.8	vdds_ddr2	No	LVCMOS DDR	Pux/PDy	
N22	ddr2_vref0	ddr2_vref0		0	PWR	OFF	OFF		1.35/1.5/1.8	vdds_ddr2	No	LVCMOS DDR		
U25	ddr2_wen	ddr2_wen		0	O	PD	drive 1 (OFF)		1.35/1.5/1.8	vdds_ddr2	No	LVCMOS DDR	Pux/PDy	
G21	emu0	emu0		0	IO	PU	PU	0	1.8/3.3	vddshv3	Yes	Dual Voltage LVCMOS	PU/PD	
		gpio8_30		14	IO									
D24	emu1	emu1		0	IO	PU	PU	0	1.8/3.3	vddshv3	Yes	Dual Voltage LVCMOS	PU/PD	
		gpio8_31		14	IO									

Copyright © 2015–2019, Texas Instruments Incorporated

表 4-2. Ball Characteristics[(1)] (continued)

BALL NUMBER [1]	BALL NAME [2]	SIGNAL NAME [3]	PN [4]	MUXMODE [5]	TYPE [6]	BALL RESET STATE [7]	BALL RESET REL. STATE [8]	BALL RESET REL. MUXMODE [9]	I/O VOLTAGE VALUE [10]	POWER [11]	HYS [12]	BUFFER TYPE [13]	PULL UP/DOWN TYPE [14]	DSIS [15]
AC5	gpio6_10	gpio6_10		0	IO	PU	PU	15	1.8/3.3	vddshv7	Yes	Dual Voltage LVCMOS	PU/PD	
		mdio_mclk		1	O									1
		i2c3_sda		2	IO									1
		vin2b_hsync1		4	I									
		vin5a_clk0		9	I									0
		ehrpwm2A		10	O									
		pr2_mii_mt1_clk		11	I									0
		pr2_pru0_gpi0		12	I									
		pr2_pru0_gpo0		13	O									
		gpio6_10		14	IO									
		Driver off		15	I									
AB4	gpio6_11	gpio6_11		0	IO	PU	PU	15	1.8/3.3	vddshv7	Yes	Dual Voltage LVCMOS	PU/PD	
		mdio_d		1	IO									1
		i2c3_scl		2	IO									1
		vin2b_vsync1		4	I									
		vin5a_de0		9	I									0
		ehrpwm2B		10	O									
		pr2_mii1_txen		11	O									
		pr2_pru0_gpi1		12	I									
		pr2_pru0_gpo1		13	O									
		gpio6_11		14	IO									
		Driver off		15	I									
E21	gpio6_14	gpio6_14		0	IO	PU	PU	15	1.8/3.3	vddshv3	Yes	Dual Voltage LVCMOS	PU/PD	
		mcasp1_axr8		1	IO									0
		dcan2_tx		2	IO									1
		uart10_rxd		3	I									1
		vout2_hsync	No	6	O									
		vin4a_hsync0		8	I									0
		i2c3_sda		9	IO									1
		timer1		10	IO									
		gpio6_14		14	IO									
		Driver off		15	I									

表 4-2. Ball Characteristics[(1)] (continued)

BALL NUMBER [1]	BALL NAME [2]	SIGNAL NAME [3]	PN [4]	MUXMODE [5]	TYPE [6]	BALL RESET STATE [7]	BALL RESET REL. STATE [8]	BALL RESET REL. MUXMODE [9]	I/O VOLTAGE VALUE [10]	POWER [11]	HYS [12]	BUFFER TYPE [13]	PULL UP/DOWN TYPE [14]	DSIS [15]
F20	gpio6_15	gpio6_15		0	IO	PU	PU	15	1.8/3.3	vddshv3	Yes	Dual Voltage LVCMOS	PU/PD	
		mcasp1_axr9		1	IO									0
		dcan2_rx		2	IO									1
		uart10_txd		3	O									
		vout2_vsync	No	6	O									
		vin4a_vsync0		8	I									0
		i2c3_scl		9	IO									1
		timer2		10	IO									
		gpio6_15		14	IO									
		Driver off		15	I									
F21	gpio6_16	gpio6_16		0	IO	PU	PU	15	1.8/3.3	vddshv3	Yes	Dual Voltage LVCMOS	PU/PD	
		mcasp1_axr10		1	IO									0
		vout2_fld	No	6	O									
		vin4a_fld0		8	I									0
		clkout1		9	O									
		timer3		10	IO									
		gpio6_16		14	IO									
		Driver off		15	I									
R6	gpmc_a0	gpmc_a0		0	O	PD	PD	15	1.8/3.3	vddshv10	Yes	Dual Voltage LVCMOS	PU/PD	
		vin3a_d16		2	I									0
		vout3_d16	No	3	O									
		vin4a_d0		4	I									0
		vin4b_d0		6	I									0
		i2c4_scl		7	IO									1
		uart5_rxd		8	I									1
		gpio7_3		14	IO									
		Driver off		15	I									
T9	gpmc_a1	gpmc_a1		0	O	PD	PD	15	1.8/3.3	vddshv10	Yes	Dual Voltage LVCMOS	PU/PD	
		vin3a_d17		2	I									0
		vout3_d17	No	3	O									
		vin4a_d1		4	I									0
		vin4b_d1		6	I									0
		i2c4_sda		7	IO									1
		uart5_txd		8	O									
		gpio7_4		14	IO									
		Driver off		15	I									

Copyright © 2015–2019, Texas Instruments Incorporated

表 4-2. Ball Characteristics[(1)] (continued)

BALL NUMBER [1]	BALL NAME [2]	SIGNAL NAME [3]	PN [4]	MUXMODE [5]	TYPE [6]	BALL RESET STATE [7]	BALL RESET REL. STATE [8]	BALL RESET REL. MUXMODE [9]	I/O VOLTAGE VALUE [10]	POWER [11]	HYS [12]	BUFFER TYPE [13]	PULL UP/DOWN TYPE [14]	DSIS [15]
N9	gpmc_a10	gpmc_a10		0	O	PD	PD	15	1.8/3.3	vddshv10	Yes	Dual Voltage LVCMOS	PU/PD	
		vin3a_de0		2	I									0
		vout3_de	No	3	O									
		vin4b_clk1		6	I									0
		timer10		7	IO									
		spi4_d0		8	IO									0
		gpio2_0		14	IO									
		Driver off		15	I									
P9	gpmc_a11	gpmc_a11		0	O	PD	PD	15	1.8/3.3	vddshv10	Yes	Dual Voltage LVCMOS	PU/PD	
		vin3a_fld0		2	I									0
		vout3_fld	No	3	O									
		vin4a_fld0		4	I									0
		vin4b_de1		6	I									0
		timer9		7	IO									
		spi4_cs0		8	IO									1
		gpio2_1		14	IO									
		Driver off		15	I									
P4	gpmc_a12	gpmc_a12		0	O	PD	PD	15	1.8/3.3	vddshv10	Yes	Dual Voltage LVCMOS	PU/PD	
		vin4a_clk0		4	I									0
		gpmc_a0		5	O									
		vin4b_fld1		6	I									0
		timer8		7	IO									
		spi4_cs1		8	IO									1
		dma_evt1		9	I									0
		gpio2_2		14	IO									
		Driver off		15	I									
R3	gpmc_a13	gpmc_a13		0	O	PD	PD	15	1.8/3.3	vddshv10	Yes	Dual Voltage LVCMOS	PU/PD	
		qspi1_rtclk		1	I									0
		vin4a_hsync0		4	I									0
		timer7		7	IO									
		spi4_cs2		8	IO									1
		dma_evt2		9	I									0
		gpio2_3		14	IO									
		Driver off		15	I									

表 4-2. Ball Characteristics[(1)] (continued)

BALL NUMBER [1]	BALL NAME [2]	SIGNAL NAME [3]	PN [4]	MUXMODE [5]	TYPE [6]	BALL RESET STATE [7]	BALL RESET REL. STATE [8]	BALL RESET REL. MUXMODE [9]	I/O VOLTAGE VALUE [10]	POWER [11]	HYS [12]	BUFFER TYPE [13]	PULL UP/DOWN TYPE [14]	DSIS [15]
T2	gpmc_a14	gpmc_a14		0	O	PD	PD	15	1.8/3.3	vddshv10	Yes	Dual Voltage LVCMOS	PU/PD	
		qspi1_d3		1	I									0
		vin4a_vsync0		4	I									0
		timer6		7	IO									
		spi4_cs3		8	IO									1
		gpio2_4		14	IO									
		Driver off		15	I									
U2	gpmc_a15	gpmc_a15		0	O	PD	PD	15	1.8/3.3	vddshv10	Yes	Dual Voltage LVCMOS	PU/PD	
		qspi1_d2		1	I									0
		vin4a_d8		4	I									0
		timer5		7	IO									
		gpio2_5		14	IO									
		Driver off		15	I									
U1	gpmc_a16	gpmc_a16		0	O	PD	PD	15	1.8/3.3	vddshv10	Yes	Dual Voltage LVCMOS	PU/PD	
		qspi1_d0		1	IO									0
		vin4a_d9		4	I									0
		gpio2_6		14	IO									
		Driver off		15	I									
P3	gpmc_a17	gpmc_a17		0	O	PD	PD	15	1.8/3.3	vddshv10	Yes	Dual Voltage LVCMOS	PU/PD	
		qspi1_d1		1	I									0
		vin4a_d10		4	I									0
		gpio2_7		14	IO									
		Driver off		15	I									
R2	gpmc_a18	gpmc_a18		0	O	PD	PD	15	1.8/3.3	vddshv10	Yes	Dual Voltage LVCMOS	PU/PD	
		qspi1_sclk		1	O									
		vin4a_d11		4	I									0
		gpio2_8		14	IO									
		Driver off		15	I									
K7 [(9)]	gpmc_a19	gpmc_a19		0	O	PD	PD	15	1.8/3.3	vddshv11	Yes	Dual Voltage LVCMOS	PU/PD	
		mmc2_dat4		1	IO									1
		gpmc_a13		2	O									
		vin4a_d12		4	I									0
		vin3b_d0		6	I									0
		gpio2_9		14	IO									
		Driver off		15	I									

Copyright © 2015–2019, Texas Instruments Incorporated

表 4-2. Ball Characteristics[(1)] (continued)

BALL NUMBER [1]	BALL NAME [2]	SIGNAL NAME [3]	PN [4]	MUXMODE [5]	TYPE [6]	BALL RESET STATE [7]	BALL RESET REL. STATE [8]	BALL RESET REL. MUXMODE [9]	I/O VOLTAGE VALUE [10]	POWER [11]	HYS [12]	BUFFER TYPE [13]	PULL UP/DOWN TYPE [14]	DSIS [15]
T6	gpmc_a2	gpmc_a2		0	O	PD	PD	15	1.8/3.3	vddshv10	Yes	Dual Voltage LVCMOS	PU/PD	
		vin3a_d18		2	I									0
		vout3_d18	No	3	O									
		vin4a_d2		4	I									0
		vin4b_d2		6	I									0
		uart7_rxd		7	I									1
		uart5_ctsn		8	I									1
		gpio7_5		14	IO									
		Driver off		15	I									
M7 [(9)]	gpmc_a20	gpmc_a20		0	O	PD	PD	15	1.8/3.3	vddshv11	Yes	Dual Voltage LVCMOS	PU/PD	
		mmc2_dat5		1	IO									1
		gpmc_a14		2	O									
		vin4a_d13		4	I									0
		vin3b_d1		6	I									0
		gpio2_10		14	IO									
		Driver off		15	I									
J5 [(9)]	gpmc_a21	gpmc_a21		0	O	PD	PD	15	1.8/3.3	vddshv11	Yes	Dual Voltage LVCMOS	PU/PD	
		mmc2_dat6		1	IO									1
		gpmc_a15		2	O									
		vin4a_d14		4	I									0
		vin3b_d2		6	I									0
		gpio2_11		14	IO									
		Driver off		15	I									
K6 [(9)]	gpmc_a22	gpmc_a22		0	O	PD	PD	15	1.8/3.3	vddshv11	Yes	Dual Voltage LVCMOS	PU/PD	
		mmc2_dat7		1	IO									1
		gpmc_a16		2	O									
		vin4a_d15		4	I									0
		vin3b_d3		6	I									0
		gpio2_12		14	IO									
		Driver off		15	I									
J7	gpmc_a23	gpmc_a23		0	O	PD	PD	15	1.8/3.3	vddshv11	Yes	Dual Voltage LVCMOS	PU/PD	
		mmc2_clk		1	IO									1
		gpmc_a17		2	O									
		vin4a_fld0		4	I									0
		vin3b_d4		6	I									0
		gpio2_13		14	IO									
		Driver off		15	I									

表 4-2. Ball Characteristics[(1)] (continued)

BALL NUMBER [1]	BALL NAME [2]	SIGNAL NAME [3]	PN [4]	MUXMODE [5]	TYPE [6]	BALL RESET STATE [7]	BALL RESET REL. STATE [8]	BALL RESET REL. MUXMODE [9]	I/O VOLTAGE VALUE [10]	POWER [11]	HYS [12]	BUFFER TYPE [13]	PULL UP/DOWN TYPE [14]	DSIS [15]
J4 [(9)]	gpmc_a24	gpmc_a24		0	O	PD	PD	15	1.8/3.3	vddshv11	Yes	Dual Voltage LVCMOS	PU/PD	
		mmc2_dat0		1	IO									1
		gpmc_a18		2	O									
		vin3b_d5		6	I									0
		gpio2_14		14	IO									
		Driver off		15	I									
J6 [(9)]	gpmc_a25	gpmc_a25		0	O	PD	PD	15	1.8/3.3	vddshv11	Yes	Dual Voltage LVCMOS	PU/PD	
		mmc2_dat1		1	IO									1
		gpmc_a19		2	O									
		vin3b_d6		6	I									0
		gpio2_15		14	IO									
		Driver off		15	I									
H4 [(9)]	gpmc_a26	gpmc_a26		0	O	PD	PD	15	1.8/3.3	vddshv11	Yes	Dual Voltage LVCMOS	PU/PD	
		mmc2_dat2		1	IO									1
		gpmc_a20		2	O									
		vin3b_d7		6	I									0
		gpio2_16		14	IO									
		Driver off		15	I									
H5 [(9)]	gpmc_a27	gpmc_a27		0	O	PD	PD	15	1.8/3.3	vddshv11	Yes	Dual Voltage LVCMOS	PU/PD	
		mmc2_dat3		1	IO									1
		gpmc_a21		2	O									
		vin3b_hsync1		6	I									0
		gpio2_17		14	IO									
		Driver off		15	I									
T7	gpmc_a3	gpmc_a3		0	O	PD	PD	15	1.8/3.3	vddshv10	Yes	Dual Voltage LVCMOS	PU/PD	
		qspi1_cs2		1	O									1
		vin3a_d19		2	I									0
		vout3_d19	No	3	O									
		vin4a_d3		4	I									0
		vin4b_d3		6	I									0
		uart7_txd		7	O									
		uart5_rtsn		8	O									
		gpio7_6		14	IO									
		Driver off		15	I									

Copyright © 2015–2019, Texas Instruments Incorporated

表 4-2. Ball Characteristics[(1)] (continued)

BALL NUMBER [1]	BALL NAME [2]	SIGNAL NAME [3]	PN [4]	MUXMODE [5]	TYPE [6]	BALL RESET STATE [7]	BALL RESET REL. STATE [8]	BALL RESET REL. MUXMODE [9]	I/O VOLTAGE VALUE [10]	POWER [11]	HYS [12]	BUFFER TYPE [13]	PULL UP/DOWN TYPE [14]	DSIS [15]
P6	gpmc_a4	gpmc_a4		0	O	PD	PD	15	1.8/3.3	vddshv10	Yes	Dual Voltage LVCMOS	PU/PD	
		qspi1_cs3		1	O									1
		vin3a_d20		2	I									0
		vout3_d20	No	3	O									
		vin4a_d4		4	I									0
		vin4b_d4		6	I									0
		i2c5_scl		7	IO									1
		uart6_rxd		8	I									1
		gpio1_26		14	IO									
		Driver off		15	I									
R9	gpmc_a5	gpmc_a5		0	O	PD	PD	15	1.8/3.3	vddshv10	Yes	Dual Voltage LVCMOS	PU/PD	
		vin3a_d21		2	I									0
		vout3_d21	No	3	O									
		vin4a_d5		4	I									0
		vin4b_d5		6	I									0
		i2c5_sda		7	IO									1
		uart6_txd		8	O									
		gpio1_27		14	IO									
		Driver off		15	I									
R5	gpmc_a6	gpmc_a6		0	O	PD	PD	15	1.8/3.3	vddshv10	Yes	Dual Voltage LVCMOS	PU/PD	
		vin3a_d22		2	I									0
		vout3_d22	No	3	O									
		vin4a_d6		4	I									0
		vin4b_d6		6	I									0
		uart8_rxd		7	I									1
		uart6_ctsn		8	I									1
		gpio1_28		14	IO									
		Driver off		15	I									
P5	gpmc_a7	gpmc_a7		0	O	PD	PD	15	1.8/3.3	vddshv10	Yes	Dual Voltage LVCMOS	PU/PD	
		vin3a_d23		2	I									0
		vout3_d23	No	3	O									
		vin4a_d7		4	I									0
		vin4b_d7		6	I									0
		uart8_txd		7	O									
		uart6_rtsn		8	O									
		gpio1_29		14	IO									
		Driver off		15	I									

Copyright © 2015–2019, Texas Instruments Incorporated

表 4-2. Ball Characteristics[(1)] (continued)

BALL NUMBER [1]	BALL NAME [2]	SIGNAL NAME [3]	PN [4]	MUXMODE [5]	TYPE [6]	BALL RESET STATE [7]	BALL RESET REL. STATE [8]	BALL RESET REL. MUXMODE [9]	I/O VOLTAGE VALUE [10]	POWER [11]	HYS [12]	BUFFER TYPE [13]	PULL UP/DOWN TYPE [14]	DSIS [15]
N7	gpmc_a8	gpmc_a8		0	O	PD	PD	15	1.8/3.3	vddshv10	Yes	Dual Voltage LVCMOS	PU/PD	
		vin3a_hsync0		2	I									0
		vout3_hsync	No	3	O									
		vin4b_hsync1		6	I									0
		timer12		7	IO									
		spi4_sclk		8	IO									0
		gpio1_30		14	IO									
		Driver off		15	I									
R4	gpmc_a9	gpmc_a9		0	O	PD	PD	15	1.8/3.3	vddshv10	Yes	Dual Voltage LVCMOS	PU/PD	
		vin3a_vsync0		2	I									0
		vout3_vsync	No	3	O									
		vin4b_vsync1		6	I									0
		timer11		7	IO									
		spi4_d1		8	IO									0
		gpio1_31		14	IO									
		Driver off		15	I									
M6	gpmc_ad0	gpmc_ad0		0	IO	OFF	OFF	15	1.8/3.3	vddshv10	Yes	Dual Voltage LVCMOS	PU/PD	0
		vin3a_d0		2	I									0
		vout3_d0	No	3	O									
		gpio1_6		14	IO									
		sysboot0		15	I									
M2	gpmc_ad1	gpmc_ad1		0	IO	OFF	OFF	15	1.8/3.3	vddshv10	Yes	Dual Voltage LVCMOS	PU/PD	0
		vin3a_d1		2	I									0
		vout3_d1	No	3	O									
		gpio1_7		14	IO									
		sysboot1		15	I									
J1	gpmc_ad10	gpmc_ad10		0	IO	OFF	OFF	15	1.8/3.3	vddshv10	Yes	Dual Voltage LVCMOS	PU/PD	0
		vin3a_d10		2	I									0
		vout3_d10	No	3	O									
		gpio7_28		14	IO									
		sysboot10		15	I									
J2	gpmc_ad11	gpmc_ad11		0	IO	OFF	OFF	15	1.8/3.3	vddshv10	Yes	Dual Voltage LVCMOS	PU/PD	0
		vin3a_d11		2	I									0
		vout3_d11	No	3	O									
		gpio7_29		14	IO									
		sysboot11		15	I									

Copyright © 2015–2019, Texas Instruments Incorporated

表 4-2. Ball Characteristics[(1)] (continued)

BALL NUMBER [1]	BALL NAME [2]	SIGNAL NAME [3]	PN [4]	MUXMODE [5]	TYPE [6]	BALL RESET STATE [7]	BALL RESET REL. STATE [8]	BALL RESET REL. MUXMODE [9]	I/O VOLTAGE VALUE [10]	POWER [11]	HYS [12]	BUFFER TYPE [13]	PULL UP/DOWN TYPE [14]	DSIS [15]
H1	gpmc_ad12	gpmc_ad12		0	IO	OFF	OFF	15	1.8/3.3	vddshv10	Yes	Dual Voltage LVCMOS	PU/PD	0
		vin3a_d12		2	I									0
		vout3_d12	No	3	O									
		gpio1_18		14	IO									
		sysboot12		15	I									
J3	gpmc_ad13	gpmc_ad13		0	IO	OFF	OFF	15	1.8/3.3	vddshv10	Yes	Dual Voltage LVCMOS	PU/PD	0
		vin3a_d13		2	I									0
		vout3_d13	No	3	O									
		gpio1_19		14	IO									
		sysboot13		15	I									
H2	gpmc_ad14	gpmc_ad14		0	IO	OFF	OFF	15	1.8/3.3	vddshv10	Yes	Dual Voltage LVCMOS	PU/PD	0
		vin3a_d14		2	I									0
		vout3_d14	No	3	O									
		gpio1_20		14	IO									
		sysboot14		15	I									
H3	gpmc_ad15	gpmc_ad15		0	IO	OFF	OFF	15	1.8/3.3	vddshv10	Yes	Dual Voltage LVCMOS	PU/PD	0
		vin3a_d15		2	I									0
		vout3_d15	No	3	O									
		gpio1_21		14	IO									
		sysboot15		15	I									
L5	gpmc_ad2	gpmc_ad2		0	IO	OFF	OFF	15	1.8/3.3	vddshv10	Yes	Dual Voltage LVCMOS	PU/PD	0
		vin3a_d2		2	I									0
		vout3_d2	No	3	O									
		gpio1_8		14	IO									
		sysboot2		15	I									
M1	gpmc_ad3	gpmc_ad3		0	IO	OFF	OFF	15	1.8/3.3	vddshv10	Yes	Dual Voltage LVCMOS	PU/PD	0
		vin3a_d3		2	I									0
		vout3_d3	No	3	O									
		gpio1_9		14	IO									
		sysboot3		15	I									
L6	gpmc_ad4	gpmc_ad4		0	IO	OFF	OFF	15	1.8/3.3	vddshv10	Yes	Dual Voltage LVCMOS	PU/PD	0
		vin3a_d4		2	I									0
		vout3_d4	No	3	O									
		gpio1_10		14	IO									
		sysboot4		15	I									

表 4-2. Ball Characteristics[(1)] (continued)

BALL NUMBER [1]	BALL NAME [2]	SIGNAL NAME [3]	PN [4]	MUXMODE [5]	TYPE [6]	BALL RESET STATE [7]	BALL RESET REL. STATE [8]	BALL RESET REL. MUXMODE [9]	I/O VOLTAGE VALUE [10]	POWER [11]	HYS [12]	BUFFER TYPE [13]	PULL UP/DOWN TYPE [14]	DSIS [15]
L4	gpmc_ad5	gpmc_ad5		0	IO	OFF	OFF	15	1.8/3.3	vddshv10	Yes	Dual Voltage LVCMOS	PU/PD	0
		vin3a_d5		2	I									0
		vout3_d5	No	3	O									
		gpio1_11		14	IO									
		sysboot5		15	I									
L3	gpmc_ad6	gpmc_ad6		0	IO	OFF	OFF	15	1.8/3.3	vddshv10	Yes	Dual Voltage LVCMOS	PU/PD	0
		vin3a_d6		2	I									0
		vout3_d6	No	3	O									
		gpio1_12		14	IO									
		sysboot6		15	I									
L2	gpmc_ad7	gpmc_ad7		0	IO	OFF	OFF	15	1.8/3.3	vddshv10	Yes	Dual Voltage LVCMOS	PU/PD	0
		vin3a_d7		2	I									0
		vout3_d7	No	3	O									
		gpio1_13		14	IO									
		sysboot7		15	I									
L1	gpmc_ad8	gpmc_ad8		0	IO	OFF	OFF	15	1.8/3.3	vddshv10	Yes	Dual Voltage LVCMOS	PU/PD	0
		vin3a_d8		2	I									0
		vout3_d8	No	3	O									
		gpio7_18		14	IO									
		sysboot8		15	I									
K2	gpmc_ad9	gpmc_ad9		0	IO	OFF	OFF	15	1.8/3.3	vddshv10	Yes	Dual Voltage LVCMOS	PU/PD	0
		vin3a_d9		2	I									0
		vout3_d9	No	3	O									
		gpio7_19		14	IO									
		sysboot9		15	I									
N1	gpmc_advn_ale	gpmc_advn_ale		0	O	PU	PU	15	1.8/3.3	vddshv10	Yes	Dual Voltage LVCMOS	PU/PD	
		gpmc_cs6		1	O									
		clkout2		2	O									
		gpmc_wait1		3	I									1
		vin4a_vsync0		4	I									0
		gpmc_a2		5	O									
		gpmc_a23		6	O									
		timer3		7	IO									
		i2c3_sda		8	IO									1
		dma_evt2		9	I									0
		gpio2_23		14	IO									
		Driver off		15	I									

Copyright © 2015–2019, Texas Instruments Incorporated

表 4-2. Ball Characteristics[(1)] (continued)

BALL NUMBER [1]	BALL NAME [2]	SIGNAL NAME [3]	PN [4]	MUXMODE [5]	TYPE [6]	BALL RESET STATE [7]	BALL RESET REL. STATE [8]	BALL RESET REL. MUXMODE [9]	I/O VOLTAGE VALUE [10]	POWER [11]	HYS [12]	BUFFER TYPE [13]	PULL UP/DOWN TYPE [14]	DSIS [15]
N6	gpmc_ben0	gpmc_ben0		0	O	PU	PU	15	1.8/3.3	vddshv10	Yes	Dual Voltage LVCMOS	PU/PD	
		gpmc_cs4		1	O									
		vin1b_hsync1		3	I									0
		vin3b_de1		6	I									0
		timer2		7	IO									
		dma_evt3		9	I									0
		gpio2_26		14	IO									
		Driver off		15	I									
M4	gpmc_ben1	gpmc_ben1		0	O	PU	PU	15	1.8/3.3	vddshv10	Yes	Dual Voltage LVCMOS	PU/PD	
		gpmc_cs5		1	O									
		vin1b_de1		3	I									0
		vin3b_clk1		4	I									0
		gpmc_a3		5	O									
		vin3b_fld1		6	I									0
		timer1		7	IO									
		dma_evt4		9	I									0
		gpio2_27		14	IO									
		Driver off		15	I									
P7	gpmc_clk	gpmc_clk		0	IO	PU	PU	15	1.8/3.3	vddshv10	Yes	Dual Voltage LVCMOS	PU/PD	0
		gpmc_cs7		1	O									
		clkout1		2	O									
		gpmc_wait1		3	I									1
		vin4a_hsync0		4	I									0
		vin4a_de0		5	I									0
		vin3b_clk1		6	I									0
		timer4		7	IO									
		i2c3_scl		8	IO									1
		dma_evt1		9	I									0
		gpio2_22		14	IO									
		Driver off		15	I									
T1	gpmc_cs0	gpmc_cs0		0	O	PU	PU	15	1.8/3.3	vddshv10	Yes	Dual Voltage LVCMOS	PU/PD	
		gpio2_19		14	IO									
		Driver off		15	I									

表 4-2. Ball Characteristics[(1)] (continued)

BALL NUMBER [1]	BALL NAME [2]	SIGNAL NAME [3]	PN [4]	MUXMODE [5]	TYPE [6]	BALL RESET STATE [7]	BALL RESET REL. STATE [8]	BALL RESET REL. MUXMODE [9]	I/O VOLTAGE VALUE [10]	POWER [11]	HYS [12]	BUFFER TYPE [13]	PULL UP/DOWN TYPE [14]	DSIS [15]
H6	gpmc_cs1	gpmc_cs1		0	O	PU	PU	15	1.8/3.3	vddshv11	Yes	Dual Voltage LVCMOS	PU/PD	
		mmc2_cmd		1	IO									1
		gpmc_a22		2	O									
		vin4a_de0		4	I									0
		vin3b_vsync1		6	I									0
		gpio2_18		14	IO									
		Driver off		15	I									
P2	gpmc_cs2	gpmc_cs2		0	O	PU	PU	15	1.8/3.3	vddshv10	Yes	Dual Voltage LVCMOS	PU/PD	
		qspi1_cs0		1	O									1
		gpio2_20		14	IO									
		Driver off		15	I									
P1	gpmc_cs3	gpmc_cs3		0	O	PU	PU	15	1.8/3.3	vddshv10	Yes	Dual Voltage LVCMOS	PU/PD	
		qspi1_cs1		1	O									1
		vin3a_clk0		2	I									0
		vout3_clk	No	3	O									
		gpmc_a1		5	O									
		gpio2_21		14	IO									
		Driver off		15	I									
M5	gpmc_oen_ren	gpmc_oen_ren		0	O	PU	PU	15	1.8/3.3	vddshv10	Yes	Dual Voltage LVCMOS	PU/PD	
		gpio2_24		14	IO									
		Driver off		15	I									
N2	gpmc_wait0	gpmc_wait0		0	I	PU	PU	15	1.8/3.3	vddshv10	Yes	Dual Voltage LVCMOS	PU/PD	1
		gpio2_28		14	IO									
		Driver off		15	I									
M3	gpmc_wen	gpmc_wen		0	O	PU	PU	15	1.8/3.3	vddshv10	Yes	Dual Voltage LVCMOS	PU/PD	
		gpio2_25		14	IO									
		Driver off		15	I									
AG16	hdmi1_clockx	hdmi1_clockx	No	0	O				1.8	vdda_hdmi		HDMIPHY	PDy	
AH16	hdmi1_clocky	hdmi1_clocky	No	0	O				1.8	vdda_hdmi		HDMIPHY	PDy	
AG17	hdmi1_data0x	hdmi1_data0x	No	0	O				1.8	vdda_hdmi		HDMIPHY	PDy	
AH17	hdmi1_data0y	hdmi1_data0y	No	0	O				1.8	vdda_hdmi		HDMIPHY	PDy	
AG18	hdmi1_data1x	hdmi1_data1x	No	0	O				1.8	vdda_hdmi		HDMIPHY	PDy	
AH18	hdmi1_data1y	hdmi1_data1y	No	0	O				1.8	vdda_hdmi		HDMIPHY	PDy	
AG19	hdmi1_data2x	hdmi1_data2x	No	0	O				1.8	vdda_hdmi		HDMIPHY	PDy	
AH19	hdmi1_data2y	hdmi1_data2y	No	0	O				1.8	vdda_hdmi		HDMIPHY	PDy	

Copyright © 2015–2019, Texas Instruments Incorporated

表 4-2. Ball Characteristics[(1)] (continued)

BALL NUMBER [1]	BALL NAME [2]	SIGNAL NAME [3]	PN [4]	MUXMODE [5]	TYPE [6]	BALL RESET STATE [7]	BALL RESET REL. STATE [8]	BALL RESET REL. MUXMODE [9]	I/O VOLTAGE VALUE [10]	POWER [11]	HYS [12]	BUFFER TYPE [13]	PULL UP/DOWN TYPE [14]	DSIS [15]
C20	i2c1_scl	i2c1_scl		0	IO	OFF	OFF		1.8/3.3	vddshv3	Yes	Dual Voltage LVCMOS I2C	PU/PD	
C21	i2c1_sda	i2c1_sda		0	IO	OFF	OFF		1.8/3.3	vddshv3	Yes	Dual Voltage LVCMOS I2C	PU/PD	
F17	i2c2_scl	i2c2_scl		0	IO	OFF	OFF	15	1.8/3.3	vddshv3	Yes	Dual Voltage LVCMOS I2C	PU/PD	1
		hdmi1_ddc_sda	No	1	IO									
		Driver off		15	I									
C25	i2c2_sda	i2c2_sda		0	IO	OFF	OFF	15	1.8/3.3	vddshv3	Yes	Dual Voltage LVCMOS I2C	PU/PD	1
		hdmi1_ddc_scl	No	1	IO									
		Driver off		15	I									
AH15	ljcb_clkn	ljcb_clkn		0	IO				1.8	vdda_pcie		LJCB		
AG15	ljcb_clkp	ljcb_clkp		0	IO				1.8	vdda_pcie		LJCB		
B14	mcasp1_aclkr	mcasp1_aclkr		0	IO	PD	PD	15	1.8/3.3	vddshv3	Yes	Dual Voltage LVCMOS	PU/PD	0
		mcasp7_axr2		1	IO									0
		vout2_d0	No	6	O									
		vin4a_d0		8	I									0
		i2c4_sda		10	IO									1
		gpio5_0		14	IO									
		Driver off		15	I									
C14	mcasp1_aclkx	mcasp1_aclkx		0	IO	PD	PD	15	1.8/3.3	vddshv3	Yes	Dual Voltage LVCMOS	PU/PD	0
		vin6a_fld0		7	I									0
		i2c3_sda		10	IO									1
		pr2_mdio_mdclk		11	O									
		pr2_pru1_gpi7		12	I									
		pr2_pru1_gpo7		13	O									
		gpio7_31		14	IO									
		Driver off		15	I									

表 4-2. Ball Characteristics[(1)] (continued)

BALL NUMBER [1]	BALL NAME [2]	SIGNAL NAME [3]	PN [4]	MUXMODE [5]	TYPE [6]	BALL RESET STATE [7]	BALL RESET REL. STATE [8]	BALL RESET REL. MUXMODE [9]	I/O VOLTAGE VALUE [10]	POWER [11]	HYS [12]	BUFFER TYPE [13]	PULL UP/DOWN TYPE [14]	DSIS [15]
G12	mcasp1_axr0	mcasp1_axr0		0	IO	PD	PD	15	1.8/3.3	vddshv3	Yes	Dual Voltage LVCMOS	PU/PD	0
		uart6_rxd		3	I									1
		vin6a_vsync0		7	I									0
		i2c5_sda		10	IO									1
		pr2_mii0_rxer		11	I									0
		pr2_pru1_gpi8		12	I									
		pr2_pru1_gpo8		13	O									
		gpio5_2		14	IO									
		Driver off		15	I									
F12	mcasp1_axr1	mcasp1_axr1		0	IO	PD	PD	15	1.8/3.3	vddshv3	Yes	Dual Voltage LVCMOS	PU/PD	0
		uart6_txd		3	O									
		vin6a_hsync0		7	I									0
		i2c5_scl		10	IO									1
		pr2_mii_mt0_clk		11	I									0
		pr2_pru1_gpi9		12	I									
		pr2_pru1_gpo9		13	O									
		gpio5_3		14	IO									
		Driver off		15	I									
B13	mcasp1_axr10	mcasp1_axr10		0	IO	PD	PD	15	1.8/3.3	vddshv3	Yes	Dual Voltage LVCMOS	PU/PD	0
		mcasp6_aclkx		1	IO									0
		mcasp6_aclkr		2	IO									
		spi3_d0		3	IO									0
		vin6a_d13		7	I									0
		timer7		10	IO									
		pr2_mii0_txd2		11	O									
		pr2_pru1_gpi12		12	I									
		pr2_pru1_gpo12		13	O									
		gpio5_12		14	IO									
		Driver off		15	I									

Copyright © 2015–2019, Texas Instruments Incorporated

表 4-2. Ball Characteristics[(1)] (continued)

BALL NUMBER [1]	BALL NAME [2]	SIGNAL NAME [3]	PN [4]	MUXMODE [5]	TYPE [6]	BALL RESET STATE [7]	BALL RESET REL. STATE [8]	BALL RESET REL. MUXMODE [9]	I/O VOLTAGE VALUE [10]	POWER [11]	HYS [12]	BUFFER TYPE [13]	PULL UP/DOWN TYPE [14]	DSIS [15]
A12	mcasp1_axr11	mcasp1_axr11		0	IO	PD	PD	15	1.8/3.3	vddshv3	Yes	Dual Voltage LVCMOS	PU/PD	0
		mcasp6_fsx		1	IO									0
		mcasp6_fsr		2	IO									
		spi3_cs0		3	IO									1
		vin6a_d12		7	I									0
		timer8		10	IO									
		pr2_mii0_txd1		11	O									
		pr2_pru1_gpi13		12	I									
		pr2_pru1_gpo13		13	O									
		gpio4_17		14	IO									
		Driver off		15	I									
E14	mcasp1_axr12	mcasp1_axr12		0	IO	PD	PD	15	1.8/3.3	vddshv3	Yes	Dual Voltage LVCMOS	PU/PD	0
		mcasp7_axr0		1	IO									0
		spi3_cs1		3	IO									1
		vin6a_d11		7	I									0
		timer9		10	IO									
		pr2_mii0_txd0		11	O									
		pr2_pru1_gpi14		12	I									
		pr2_pru1_gpo14		13	O									
		gpio4_18		14	IO									
		Driver off		15	I									
A13	mcasp1_axr13	mcasp1_axr13		0	IO	PD	PD	15	1.8/3.3	vddshv3	Yes	Dual Voltage LVCMOS	PU/PD	0
		mcasp7_axr1		1	IO									0
		vin6a_d10		7	I									0
		timer10		10	IO									
		pr2_mii_mr0_clk		11	I									0
		pr2_pru1_gpi15		12	I									
		pr2_pru1_gpo15		13	O									
		gpio6_4		14	IO									
		Driver off		15	I									

表 4-2. Ball Characteristics[(1)] (continued)

BALL NUMBER [1]	BALL NAME [2]	SIGNAL NAME [3]	PN [4]	MUXMODE [5]	TYPE [6]	BALL RESET STATE [7]	BALL RESET REL. STATE [8]	BALL RESET REL. MUXMODE [9]	I/O VOLTAGE VALUE [10]	POWER [11]	HYS [12]	BUFFER TYPE [13]	PULL UP/DOWN TYPE [14]	DSIS [15]
G14	mcasp1_axr14	mcasp1_axr14		0	IO	PD	PD	15	1.8/3.3	vddshv3	Yes	Dual Voltage LVCMOS	PU/PD	0
		mcasp7_aclkx		1	IO									0
		mcasp7_aclkr		2	IO									
		vin6a_d9		7	I									0
		timer11		10	IO									
		pr2_mii0_rxdv		11	I									0
		pr2_pru1_gpi16		12	I									
		pr2_pru1_gpo16		13	O									
		gpio6_5		14	IO									
		Driver off		15	I									
F14	mcasp1_axr15	mcasp1_axr15		0	IO	PD	PD	15	1.8/3.3	vddshv3	Yes	Dual Voltage LVCMOS	PU/PD	0
		mcasp7_fsx		1	IO									0
		mcasp7_fsr		2	IO									
		vin6a_d8		7	I									0
		timer12		10	IO									
		pr2_mii0_rxd3		11	I									0
		pr2_pru0_gpi20		12	I									
		pr2_pru0_gpo20		13	O									
		gpio6_6		14	IO									
		Driver off		15	I									
G13	mcasp1_axr2	mcasp1_axr2		0	IO	PD	PD	15	1.8/3.3	vddshv3	Yes	Dual Voltage LVCMOS	PU/PD	0
		mcasp6_axr2		1	IO									0
		uart6_ctsn		3	I									1
		vout2_d2	No	6	O									
		vin4a_d2		8	I									0
		gpio5_4		14	IO									
		Driver off		15	I									
J11	mcasp1_axr3	mcasp1_axr3		0	IO	PD	PD	15	1.8/3.3	vddshv3	Yes	Dual Voltage LVCMOS	PU/PD	0
		mcasp6_axr3		1	IO									0
		uart6_rtsn		3	O									
		vout2_d3	No	6	O									
		vin4a_d3		8	I									0
		gpio5_5		14	IO									
		Driver off		15	I									

Copyright © 2015–2019, Texas Instruments Incorporated

表 4-2. Ball Characteristics[(1)] (continued)

BALL NUMBER [1]	BALL NAME [2]	SIGNAL NAME [3]	PN [4]	MUXMODE [5]	TYPE [6]	BALL RESET STATE [7]	BALL RESET REL. STATE [8]	BALL RESET REL. MUXMODE [9]	I/O VOLTAGE VALUE [10]	POWER [11]	HYS [12]	BUFFER TYPE [13]	PULL UP/DOWN TYPE [14]	DSIS [15]
E12	mcasp1_axr4	mcasp1_axr4		0	IO	PD	PD	15	1.8/3.3	vddshv3	Yes	Dual Voltage LVCMOS	PU/PD	0
		mcasp4_axr2		1	IO									0
		vout2_d4	No	6	O									
		vin4a_d4		8	I									0
		gpio5_6		14	IO									
		Driver off		15	I									
F13	mcasp1_axr5	mcasp1_axr5		0	IO	PD	PD	15	1.8/3.3	vddshv3	Yes	Dual Voltage LVCMOS	PU/PD	0
		mcasp4_axr3		1	IO									0
		vout2_d5	No	6	O									
		vin4a_d5		8	I									0
		gpio5_7		14	IO									
		Driver off		15	I									
C12	mcasp1_axr6	mcasp1_axr6		0	IO	PD	PD	15	1.8/3.3	vddshv3	Yes	Dual Voltage LVCMOS	PU/PD	0
		mcasp5_axr2		1	IO									0
		vout2_d6	No	6	O									
		vin4a_d6		8	I									0
		gpio5_8		14	IO									
		Driver off		15	I									
D12	mcasp1_axr7	mcasp1_axr7		0	IO	PD	PD	15	1.8/3.3	vddshv3	Yes	Dual Voltage LVCMOS	PU/PD	0
		mcasp5_axr3		1	IO									0
		vout2_d7	No	6	O									
		vin4a_d7		8	I									0
		timer4		10	IO									
		gpio5_9		14	IO									
		Driver off		15	I									
B12	mcasp1_axr8	mcasp1_axr8		0	IO	PD	PD	15	1.8/3.3	vddshv3	Yes	Dual Voltage LVCMOS	PU/PD	0
		mcasp6_axr0		1	IO									0
		spi3_sclk		3	IO									0
		vin6a_d15		7	I									0
		timer5		10	IO									
		pr2_mii0_txen		11	O									
		pr2_pru1_gpi10		12	I									
		pr2_pru1_gpo10		13	O									
		gpio5_10		14	IO									
		Driver off		15	I									

Copyright © 2015–2019, Texas Instruments Incorporated

表 4-2. Ball Characteristics[(1)] (continued)

BALL NUMBER [1]	BALL NAME [2]	SIGNAL NAME [3]	PN [4]	MUXMODE [5]	TYPE [6]	BALL RESET STATE [7]	BALL RESET REL. STATE [8]	BALL RESET REL. MUXMODE [9]	I/O VOLTAGE VALUE [10]	POWER [11]	HYS [12]	BUFFER TYPE [13]	PULL UP/DOWN TYPE [14]	DSIS [15]
A11	mcasp1_axr9	mcasp1_axr9		0	IO	PD	PD	15	1.8/3.3	vddshv3	Yes	Dual Voltage LVCMOS	PU/PD	0
		mcasp6_axr1		1	IO									0
		spi3_d1		3	IO									0
		vin6a_d14		7	I									0
		timer6		10	IO									
		pr2_mii0_txd3		11	O									
		pr2_pru1_gpi11		12	I									
		pr2_pru1_gpo11		13	O									
		gpio5_11		14	IO									
		Driver off		15	I									
J14	mcasp1_fsr	mcasp1_fsr		0	IO	PD	PD	15	1.8/3.3	vddshv3	Yes	Dual Voltage LVCMOS	PU/PD	0
		mcasp7_axr3		1	IO									0
		vout2_d1	No	6	O									
		vin4a_d1		8	I									0
		i2c4_scl		10	IO									1
		gpio5_1		14	IO									
		Driver off		15	I									
D14	mcasp1_fsx	mcasp1_fsx		0	IO	PD	PD	15	1.8/3.3	vddshv3	Yes	Dual Voltage LVCMOS	PU/PD	0
		vin6a_de0		7	I									0
		i2c3_scl		10	IO									1
		pr2_mdio_data		11	IO									1
		gpio7_30		14	IO									
		Driver off		15	I									
E15	mcasp2_aclkr	mcasp2_aclkr		0	IO	PD	PD	15	1.8/3.3	vddshv3	Yes	Dual Voltage LVCMOS	PU/PD	0
		mcasp8_axr2		1	IO									0
		vout2_d8	No	6	O									
		vin4a_d8		8	I									0
		Driver off		15	I									
A19	mcasp2_aclkx	mcasp2_aclkx		0	IO	PD	PD	15	1.8/3.3	vddshv3	Yes	Dual Voltage LVCMOS	PU/PD	0
		vin6a_d7		7	I									0
		pr2_mii0_rxd2		11	I									0
		pr2_pru0_gpi18		12	I									
		pr2_pru0_gpo18		13	O									
		Driver off		15	I									

Copyright © 2015–2019, Texas Instruments Incorporated

表 4-2. Ball Characteristics[(1)] (continued)

BALL NUMBER [1]	BALL NAME [2]	SIGNAL NAME [3]	PN [4]	MUXMODE [5]	TYPE [6]	BALL RESET STATE [7]	BALL RESET REL. STATE [8]	BALL RESET REL. MUXMODE [9]	I/O VOLTAGE VALUE [10]	POWER [11]	HYS [12]	BUFFER TYPE [13]	PULL UP/DOWN TYPE [14]	DSIS [15]
B15	mcasp2_axr0	mcasp2_axr0		0	IO	PD	PD	15	1.8/3.3	vddshv3	Yes	Dual Voltage LVCMOS	PU/PD	0
		vout2_d10	No	6	O									
		vin4a_d10		8	I									0
		Driver off		15	I									
A15	mcasp2_axr1	mcasp2_axr1		0	IO	PD	PD	15	1.8/3.3	vddshv3	Yes	Dual Voltage LVCMOS	PU/PD	0
		vout2_d11	No	6	O									
		vin4a_d11		8	I									0
		Driver off		15	I									
C15	mcasp2_axr2	mcasp2_axr2		0	IO	PD	PD	15	1.8/3.3	vddshv3	Yes	Dual Voltage LVCMOS	PU/PD	0
		mcasp3_axr2		1	IO									0
		vin6a_d5		7	I									0
		pr2_mii0_rxd0		11	I									0
		pr2_pru0_gpi16		12	I									
		pr2_pru0_gpo16		13	O									
		gpio6_8		14	IO									
		Driver off		15	I									
A16	mcasp2_axr3	mcasp2_axr3		0	IO	PD	PD	15	1.8/3.3	vddshv3	Yes	Dual Voltage LVCMOS	PU/PD	0
		mcasp3_axr3		1	IO									0
		vin6a_d4		7	I									0
		pr2_mii0_rxlink		11	I									0
		pr2_pru0_gpi17		12	I									
		pr2_pru0_gpo17		13	O									
		gpio6_9		14	IO									
		Driver off		15	I									
D15	mcasp2_axr4	mcasp2_axr4		0	IO	PD	PD	15	1.8/3.3	vddshv3	Yes	Dual Voltage LVCMOS	PU/PD	0
		mcasp8_axr0		1	IO									0
		vout2_d12	No	6	O									
		vin4a_d12		8	I									0
		gpio1_4		14	IO									
		Driver off		15	I									
B16	mcasp2_axr5	mcasp2_axr5		0	IO	PD	PD	15	1.8/3.3	vddshv3	Yes	Dual Voltage LVCMOS	PU/PD	0
		mcasp8_axr1		1	IO									0
		vout2_d13	No	6	O									
		vin4a_d13		8	I									0
		gpio6_7		14	IO									
		Driver off		15	I									

Copyright © 2015–2019, Texas Instruments Incorporated

表 4-2. Ball Characteristics[(1)] (continued)

BALL NUMBER [1]	BALL NAME [2]	SIGNAL NAME [3]	PN [4]	MUXMODE [5]	TYPE [6]	BALL RESET STATE [7]	BALL RESET REL. STATE [8]	BALL RESET REL. MUXMODE [9]	I/O VOLTAGE VALUE [10]	POWER [11]	HYS [12]	BUFFER TYPE [13]	PULL UP/DOWN TYPE [14]	DSIS [15]
B17	mcasp2_axr6	mcasp2_axr6		0	IO	PD	PD	15	1.8/3.3	vddshv3	Yes	Dual Voltage LVCMOS	PU/PD	0
		mcasp8_aclkx		1	IO									0
		mcasp8_aclkr		2	IO									
		vout2_d14	No	6	O									
		vin4a_d14		8	I									0
		gpio2_29		14	IO									
		Driver off		15	I									
A17	mcasp2_axr7	mcasp2_axr7		0	IO	PD	PD	15	1.8/3.3	vddshv3	Yes	Dual Voltage LVCMOS	PU/PD	0
		mcasp8_fsx		1	IO									0
		mcasp8_fsr		2	IO									
		vout2_d15	No	6	O									
		vin4a_d15		8	I									0
		gpio1_5		14	IO									
		Driver off		15	I									
A20	mcasp2_fsr	mcasp2_fsr		0	IO	PD	PD	15	1.8/3.3	vddshv3	Yes	Dual Voltage LVCMOS	PU/PD	0
		mcasp8_axr3		1	IO									0
		vout2_d9	No	6	O									
		vin4a_d9		8	I									0
		Driver off		15	I									
A18	mcasp2_fsx	mcasp2_fsx		0	IO	PD	PD	15	1.8/3.3	vddshv3	Yes	Dual Voltage LVCMOS	PU/PD	0
		vin6a_d6		7	I									0
		pr2_mii0_rxd1		11	I									0
		pr2_pru0_gpi19		12	I									
		pr2_pru0_gpo19		13	O									
		Driver off		15	I									
B18	mcasp3_aclkx	mcasp3_aclkx		0	IO	PD	PD	15	1.8/3.3	vddshv3	Yes	Dual Voltage LVCMOS	PU/PD	0
		mcasp3_aclkr		1	IO									
		mcasp2_axr12		2	IO									0
		uart7_rxd		3	I									1
		vin6a_d3		7	I									0
		pr2_mii0_crs		11	I									0
		pr2_pru0_gpi12		12	I									
		pr2_pru0_gpo12		13	O									
		gpio5_13		14	IO									
		Driver off		15	I									

Copyright © 2015–2019, Texas Instruments Incorporated

表 4-2. Ball Characteristics[(1)] (continued)

BALL NUMBER [1]	BALL NAME [2]	SIGNAL NAME [3]	PN [4]	MUXMODE [5]	TYPE [6]	BALL RESET STATE [7]	BALL RESET REL. STATE [8]	BALL RESET REL. MUXMODE [9]	I/O VOLTAGE VALUE [10]	POWER [11]	HYS [12]	BUFFER TYPE [13]	PULL UP/DOWN TYPE [14]	DSIS [15]
B19	mcasp3_axr0	mcasp3_axr0		0	IO	PD	PD	15	1.8/3.3	vddshv3	Yes	Dual Voltage LVCMOS	PU/PD	0
		mcasp2_axr14		2	IO									0
		uart7_ctsn		3	I									1
		uart5_rxd		4	I									1
		vin6a_d1		7	I									0
		pr2_mii1_rxer		11	I									0
		pr2_pru0_gpi14		12	I									
		pr2_pru0_gpo14		13	O									
		Driver off		15	I									
C17	mcasp3_axr1	mcasp3_axr1		0	IO	PD	PD	15	1.8/3.3	vddshv3	Yes	Dual Voltage LVCMOS	PU/PD	0
		mcasp2_axr15		2	IO									0
		uart7_rtsn		3	O									
		uart5_txd		4	O									
		vin6a_d0		7	I									0
		vin5a_fld0		9	I									0
		pr2_mii1_rxlink		11	I									0
		pr2_pru0_gpi15		12	I									
		pr2_pru0_gpo15		13	O									
		Driver off		15	I									
F15	mcasp3_fsx	mcasp3_fsx		0	IO	PD	PD	15	1.8/3.3	vddshv3	Yes	Dual Voltage LVCMOS	PU/PD	0
		mcasp3_fsr		1	IO									
		mcasp2_axr13		2	IO									0
		uart7_txd		3	O									
		vin6a_d2		7	I									0
		pr2_mii0_col		11	I									0
		pr2_pru0_gpi13		12	I									
		pr2_pru0_gpo13		13	O									
		gpio5_14		14	IO									
		Driver off		15	I									

Copyright © 2015–2019, Texas Instruments Incorporated

表 4-2. Ball Characteristics[(1)] (continued)

BALL NUMBER [1]	BALL NAME [2]	SIGNAL NAME [3]	PN [4]	MUXMODE [5]	TYPE [6]	BALL RESET STATE [7]	BALL RESET REL. STATE [8]	BALL RESET REL. MUXMODE [9]	I/O VOLTAGE VALUE [10]	POWER [11]	HYS [12]	BUFFER TYPE [13]	PULL UP/DOWN TYPE [14]	DSIS [15]
C18	mcasp4_aclkx	mcasp4_aclkx		0	IO	PD	PD	15	1.8/3.3	vddshv3	Yes	Dual Voltage LVCMOS	PU/PD	0
		mcasp4_aclkr		1	IO									
		spi3_sclk		2	IO									0
		uart8_rxd		3	I									1
		i2c4_sda		4	IO									1
		vout2_d16	No	6	O									
		vin4a_d16		8	I									0
		vin5a_d15		9	I									0
		Driver off		15	I									
G16	mcasp4_axr0	mcasp4_axr0		0	IO	PD	PD	15	1.8/3.3	vddshv3	Yes	Dual Voltage LVCMOS	PU/PD	0
		spi3_d0		2	IO									0
		uart8_ctsn		3	I									1
		uart4_rxd		4	I									1
		vout2_d18	No	6	O									
		vin4a_d18		8	I									0
		vin5a_d13		9	I									0
		Driver off		15	I									
D17	mcasp4_axr1	mcasp4_axr1		0	IO	PD	PD	15	1.8/3.3	vddshv3	Yes	Dual Voltage LVCMOS	PU/PD	0
		spi3_cs0		2	IO									1
		uart8_rtsn		3	O									
		uart4_txd		4	O									
		vout2_d19	No	6	O									
		vin4a_d19		8	I									0
		vin5a_d12		9	I									0
		pr2_pru1_gpi0		12	I									
		pr2_pru1_gpo0		13	O									
		Driver off		15	I									
A21	mcasp4_fsx	mcasp4_fsx		0	IO	PD	PD	15	1.8/3.3	vddshv3	Yes	Dual Voltage LVCMOS	PU/PD	0
		mcasp4_fsr		1	IO									
		spi3_d1		2	IO									0
		uart8_txd		3	O									
		i2c4_scl		4	IO									1
		vout2_d17	No	6	O									
		vin4a_d17		8	I									0
		vin5a_d14		9	I									0
		Driver off		15	I									

Copyright © 2015–2019, Texas Instruments Incorporated

表 4-2. Ball Characteristics[(1)] (continued)

BALL NUMBER [1]	BALL NAME [2]	SIGNAL NAME [3]	PN [4]	MUXMODE [5]	TYPE [6]	BALL RESET STATE [7]	BALL RESET REL. STATE [8]	BALL RESET REL. MUXMODE [9]	I/O VOLTAGE VALUE [10]	POWER [11]	HYS [12]	BUFFER TYPE [13]	PULL UP/DOWN TYPE [14]	DSIS [15]
AA3	mcasp5_aclkx	mcasp5_aclkx		0	IO	PD	PD	15	1.8/3.3	vddshv7	Yes	Dual Voltage LVCMOS	PU/PD	0
		mcasp5_aclkr		1	IO									
		spi4_sclk		2	IO									0
		uart9_rxd		3	I									1
		i2c5_sda		4	IO									1
		vout2_d20	No	6	O									
		vin4a_d20		8	I									0
		vin5a_d11		9	I									0
		pr2_pru1_gpi1		12	I									
		pr2_pru1_gpo1		13	O									
		Driver off		15	I									
AB3	mcasp5_axr0	mcasp5_axr0		0	IO	PD	PD	15	1.8/3.3	vddshv7	Yes	Dual Voltage LVCMOS	PU/PD	0
		spi4_d0		2	IO									0
		uart9_ctsn		3	I									1
		uart3_rxd		4	I									1
		vout2_d22	No	6	O									
		vin4a_d22		8	I									0
		vin5a_d9		9	I									0
		pr2_mdio_mdclk		11	O									
		pr2_pru1_gpi3		12	I									
		pr2_pru1_gpo3		13	O									
		Driver off		15	I									
AA4	mcasp5_axr1	mcasp5_axr1		0	IO	PD	PD	15	1.8/3.3	vddshv7	Yes	Dual Voltage LVCMOS	PU/PD	0
		spi4_cs0		2	IO									1
		uart9_rtsn		3	O									
		uart3_txd		4	O									
		vout2_d23	No	6	O									
		vin4a_d23		8	I									0
		vin5a_d8		9	I									0
		pr2_mdio_data		11	IO									1
		pr2_pru1_gpi4		12	I									
		pr2_pru1_gpo4		13	O									
		Driver off		15	I									

表 4-2. Ball Characteristics[(1)] (continued)

BALL NUMBER [1]	BALL NAME [2]	SIGNAL NAME [3]	PN [4]	MUXMODE [5]	TYPE [6]	BALL RESET STATE [7]	BALL RESET REL. STATE [8]	BALL RESET REL. MUXMODE [9]	I/O VOLTAGE VALUE [10]	POWER [11]	HYS [12]	BUFFER TYPE [13]	PULL UP/DOWN TYPE [14]	DSIS [15]
AB9	mcasp5_fsx	mcasp5_fsx		0	IO	PD	PD	15	1.8/3.3	vddshv7	Yes	Dual Voltage LVCMOS	PU/PD	0
		mcasp5_fsr		1	IO									
		spi4_d1		2	IO									0
		uart9_txd		3	O									
		i2c5_scl		4	IO									1
		vout2_d21	No	6	O									
		vin4a_d21		8	I									0
		vin5a_d10		9	I									0
		pr2_pru1_gpi2		12	I									
		pr2_pru1_gpo2		13	O									
		Driver off		15	I									
U4	mdio_d	mdio_d		0	IO	PU	PU	15	1.8/3.3	vddshv9	Yes	Dual Voltage LVCMOS	PU/PD	1
		uart3_ctsn		1	I									1
		mii0_txer		3	O									0
		vin2a_d0		4	I									0
		vin4b_d0		5	I									0
		pr1_mii0_rxlink		11	I									0
		pr2_pru1_gpi1		12	I									
		pr2_pru1_gpo1		13	O									
		gpio5_16		14	IO									
		Driver off		15	I									
V1	mdio_mclk	mdio_mclk		0	O	PU	PU	15	1.8/3.3	vddshv9	Yes	Dual Voltage LVCMOS	PU/PD	1
		uart3_rtsn		1	O									
		mii0_col		3	I									0
		vin2a_clk0		4	I									
		vin4b_clk1		5	I									0
		pr1_mii0_col		11	I									0
		pr2_pru1_gpi0		12	I									
		pr2_pru1_gpo0		13	O									
		gpio5_15		14	IO									
		Driver off		15	I									
AB2	mlbp_clk_n	mlbp_clk_n		0	I				1.8	vdds_mlbp	No	ILVDS18		
AB1	mlbp_clk_p	mlbp_clk_p		0	I				1.8	vdds_mlbp	No	ILVDS18		
AA2	mlbp_dat_n	mlbp_dat_n		0	IO	OFF	OFF		1.8	vdds_mlbp	No	BMLB18		
AA1	mlbp_dat_p	mlbp_dat_p		0	IO	OFF	OFF		1.8	vdds_mlbp	No	BMLB18		
AC2	mlbp_sig_n	mlbp_sig_n		0	IO	OFF	OFF		1.8	vdds_mlbp	No	BMLB18		
AC1	mlbp_sig_p	mlbp_sig_p		0	IO	OFF	OFF		1.8	vdds_mlbp	No	BMLB18		

Copyright © 2015–2019, Texas Instruments Incorporated

表 4-2. Ball Characteristics[(1)] (continued)

BALL NUMBER [1]	BALL NAME [2]	SIGNAL NAME [3]	PN [4]	MUXMODE [5]	TYPE [6]	BALL RESET STATE [7]	BALL RESET REL. STATE [8]	BALL RESET REL. MUXMODE [9]	I/O VOLTAGE VALUE [10]	POWER [11]	HYS [12]	BUFFER TYPE [13]	PULL UP/DOWN TYPE [14]	DSIS [15]
W6	mmc1_clk	mmc1_clk		0	IO	PU	PU	15	1.8/3.3	vddshv8	Yes	SDIO1833	PU/PD	1
		gpio6_21		14	IO									
		Driver off		15	I									
Y6	mmc1_cmd	mmc1_cmd		0	IO	PU	PU	15	1.8/3.3	vddshv8	Yes	SDIO1833	PU/PD	1
		gpio6_22		14	IO									
		Driver off		15	I									
AA6	mmc1_dat0	mmc1_dat0		0	IO	PU	PU	15	1.8/3.3	vddshv8	Yes	SDIO1833	PU/PD	1
		gpio6_23		14	IO									
		Driver off		15	I									
Y4	mmc1_dat1	mmc1_dat1		0	IO	PU	PU	15	1.8/3.3	vddshv8	Yes	SDIO1833	PU/PD	1
		gpio6_24		14	IO									
		Driver off		15	I									
AA5	mmc1_dat2	mmc1_dat2		0	IO	PU	PU	15	1.8/3.3	vddshv8	Yes	SDIO1833	PU/PD	1
		gpio6_25		14	IO									
		Driver off		15	I									
Y3	mmc1_dat3	mmc1_dat3		0	IO	PU	PU	15	1.8/3.3	vddshv8	Yes	SDIO1833	PU/PD	1
		gpio6_26		14	IO									
		Driver off		15	I									
W7	mmc1_sdcd	mmc1_sdcd		0	I	PU	PU	15	1.8/3.3	vddshv8	Yes	Dual Voltage LVCMOS	PU/PD	1
		uart6_rxd		3	I									1
		i2c4_sda		4	IO									1
		gpio6_27		14	IO									
		Driver off		15	I									
Y9	mmc1_sdwp	mmc1_sdwp		0	I	PD	PD	15	1.8/3.3	vddshv8	Yes	Dual Voltage LVCMOS	PU/PD	0
		uart6_txd		3	O									
		i2c4_scl		4	IO									1
		gpio6_28		14	IO									
		Driver off		15	I									
AD4	mmc3_clk	mmc3_clk		0	IO	PU	PU	15	1.8/3.3	vddshv7	Yes	Dual Voltage LVCMOS	PU/PD	1
		vin2b_d7		4	I									0
		vin5a_d7		9	I									0
		ehrpwm2_tripzone_input		10	IO									0
		pr2_mii1_txd3		11	O									
		pr2_pru0_gpi2		12	I									
		pr2_pru0_gpo2		13	O									
		gpio6_29		14	IO									
		Driver off		15	I									

Copyright © 2015–2019, Texas Instruments Incorporated

表 4-2. Ball Characteristics[(1)] (continued)

BALL NUMBER [1]	BALL NAME [2]	SIGNAL NAME [3]	PN [4]	MUXMODE [5]	TYPE [6]	BALL RESET STATE [7]	BALL RESET REL. STATE [8]	BALL RESET REL. MUXMODE [9]	I/O VOLTAGE VALUE [10]	POWER [11]	HYS [12]	BUFFER TYPE [13]	PULL UP/DOWN TYPE [14]	DSIS [15]
AC4	mmc3_cmd	mmc3_cmd		0	IO	PU	PU	15	1.8/3.3	vddshv7	Yes	Dual Voltage LVCMOS	PU/PD	1
		spi3_sclk		1	IO									0
		vin2b_d6		4	I									0
		vin5a_d6		9	I									0
		eCAP2_in_PWM2_out		10	IO									0
		pr2_mii1_txd2		11	O									
		pr2_pru0_gpi3		12	I									
		pr2_pru0_gpo3		13	O									
		gpio6_30		14	IO									
		Driver off		15	I									
AC7	mmc3_dat0	mmc3_dat0		0	IO	PU	PU	15	1.8/3.3	vddshv7	Yes	Dual Voltage LVCMOS	PU/PD	1
		spi3_d1		1	IO									0
		uart5_rxd		2	I									1
		vin2b_d5		4	I									0
		vin5a_d5		9	I									0
		eQEP3A_in		10	I									0
		pr2_mii1_txd1		11	O									
		pr2_pru0_gpi4		12	I									
		pr2_pru0_gpo4		13	O									
		gpio6_31		14	IO									
		Driver off		15	I									
AC6	mmc3_dat1	mmc3_dat1		0	IO	PU	PU	15	1.8/3.3	vddshv7	Yes	Dual Voltage LVCMOS	PU/PD	1
		spi3_d0		1	IO									0
		uart5_txd		2	O									
		vin2b_d4		4	I									0
		vin5a_d4		9	I									0
		eQEP3B_in		10	I									0
		pr2_mii1_txd0		11	O									
		pr2_pru0_gpi5		12	I									
		pr2_pru0_gpo5		13	O									
		gpio7_0		14	IO									
		Driver off		15	I									

Copyright © 2015–2019, Texas Instruments Incorporated

表 4-2. Ball Characteristics[(1)] (continued)

BALL NUMBER [1]	BALL NAME [2]	SIGNAL NAME [3]	PN [4]	MUXMODE [5]	TYPE [6]	BALL RESET STATE [7]	BALL RESET REL. STATE [8]	BALL RESET REL. MUXMODE [9]	I/O VOLTAGE VALUE [10]	POWER [11]	HYS [12]	BUFFER TYPE [13]	PULL UP/DOWN TYPE [14]	DSIS [15]
AC9	mmc3_dat2	mmc3_dat2		0	IO	PU	PU	15	1.8/3.3	vddshv7	Yes	Dual Voltage LVCMOS	PU/PD	1
		spi3_cs0		1	IO									1
		uart5_ctsn		2	I									1
		vin2b_d3		4	I									0
		vin5a_d3		9	I									0
		eQEP3_index		10	IO									0
		pr2_mii_mr1_clk		11	I									0
		pr2_pru0_gpi6		12	I									
		pr2_pru0_gpo6		13	O									
		gpio7_1		14	IO									
		Driver off		15	I									
AC3	mmc3_dat3	mmc3_dat3		0	IO	PU	PU	15	1.8/3.3	vddshv7	Yes	Dual Voltage LVCMOS	PU/PD	1
		spi3_cs1		1	IO									1
		uart5_rtsn		2	O									
		vin2b_d2		4	I									0
		vin5a_d2		9	I									0
		eQEP3_strobe		10	IO									0
		pr2_mii1_rxdv		11	I									0
		pr2_pru0_gpi7		12	I									
		pr2_pru0_gpo7		13	O									
		gpio7_2		14	IO									
		Driver off		15	I									
AC8	mmc3_dat4	mmc3_dat4		0	IO	PU	PU	15	1.8/3.3	vddshv7	Yes	Dual Voltage LVCMOS	PU/PD	1
		spi4_sclk		1	IO									0
		uart10_rxd		2	I									1
		vin2b_d1		4	I									0
		vin5a_d1		9	I									0
		ehrpwm3A		10	O									
		pr2_mii1_rxd3		11	I									0
		pr2_pru0_gpi8		12	I									
		pr2_pru0_gpo8		13	O									
		gpio1_22		14	IO									
		Driver off		15	I									

Copyright © 2015–2019, Texas Instruments Incorporated

表 4-2. Ball Characteristics[(1)] (continued)

BALL NUMBER [1]	BALL NAME [2]	SIGNAL NAME [3]	PN [4]	MUXMODE [5]	TYPE [6]	BALL RESET STATE [7]	BALL RESET REL. STATE [8]	BALL RESET REL. MUXMODE [9]	I/O VOLTAGE VALUE [10]	POWER [11]	HYS [12]	BUFFER TYPE [13]	PULL UP/DOWN TYPE [14]	DSIS [15]
AD6	mmc3_dat5	mmc3_dat5		0	IO	PU	PU	15	1.8/3.3	vddshv7	Yes	Dual Voltage LVCMOS	PU/PD	1
		spi4_d1		1	IO									0
		uart10_txd		2	O									
		vin2b_d0		4	I									0
		vin5a_d0		9	I									0
		ehrpwm3B		10	O									
		pr2_mii1_rxd2		11	I									0
		pr2_pru0_gpi9		12	I									
		pr2_pru0_gpo9		13	O									
		gpio1_23		14	IO									
		Driver off		15	I									
AB8	mmc3_dat6	mmc3_dat6		0	IO	PU	PU	15	1.8/3.3	vddshv7	Yes	Dual Voltage LVCMOS	PU/PD	1
		spi4_d0		1	IO									0
		uart10_ctsn		2	I									1
		vin2b_de1		4	I									
		vin5a_hsync0		9	I									0
		ehrpwm3_tripzone_input		10	IO									0
		pr2_mii1_rxd1		11	I									0
		pr2_pru0_gpi10		12	I									
		pr2_pru0_gpo10		13	O									
		gpio1_24		14	IO									
		Driver off		15	I									
AB5	mmc3_dat7	mmc3_dat7		0	IO	PU	PU	15	1.8/3.3	vddshv7	Yes	Dual Voltage LVCMOS	PU/PD	1
		spi4_cs0		1	IO									1
		uart10_rtsn		2	O									
		vin2b_clk1		4	I									
		vin5a_vsync0		9	I									0
		eCAP3_in_PWM3_out		10	IO									0
		pr2_mii1_rxd0		11	I									0
		pr2_pru0_gpi11		12	I									
		pr2_pru0_gpo11		13	O									
		gpio1_25		14	IO									
		Driver off		15	I									
D21	nmin_dsp	nmin_dsp		0	I	PD	PD		1.8/3.3	vddshv3	Yes	Dual Voltage LVCMOS	PU/PD	
Y11	on_off	on_off		0	O	PU	drive 1 (OFF)		1.8/3.3	vddshv5	Yes	BC1833IHHV	PU/PD	

Copyright © 2015–2019, Texas Instruments Incorporated

表 4-2. Ball Characteristics[(1)] (continued)

BALL NUMBER [1]	BALL NAME [2]	SIGNAL NAME [3]	PN [4]	MUXMODE [5]	TYPE [6]	BALL RESET STATE [7]	BALL RESET REL. STATE [8]	BALL RESET REL. MUXMODE [9]	I/O VOLTAGE VALUE [10]	POWER [11]	HYS [12]	BUFFER TYPE [13]	PULL UP/DOWN TYPE [14]	DSIS [15]
AG13	pcie_rxn0	pcie_rxn0		0	I	OFF	OFF		1.8	vdda_pcie0		SERDES		
AG11	pcie_rxn1	pcie_rxn1		0	I	OFF	OFF		1.8	vdda_pcie1		SERDES		
AH13	pcie_rxp0	pcie_rxp0		0	I	OFF	OFF		1.8	vdda_pcie0		SERDES		
AH11	pcie_rxp1	pcie_rxp1		0	I	OFF	OFF		1.8	vdda_pcie1		SERDES		
AG14	pcie_txn0	pcie_txn0		0	O				1.8	vdda_pcie0		SERDES		
AG12	pcie_txn1	pcie_txn1		0	O				1.8	vdda_pcie1		SERDES		
AH14	pcie_txp0	pcie_txp0		0	O				1.8	vdda_pcie0		SERDES		
AH12	pcie_txp1	pcie_txp1		0	O				1.8	vdda_pcie1		SERDES		
F22	porz	porz		0	I				1.8/3.3	vddshv3	Yes	IHHV1833	PU/PD	
E23	resetn	resetn		0	I	PU	PU		1.8/3.3	vddshv3	Yes	Dual Voltage LVCMOS	PU/PD	
U5	rgmii0_rxc	rgmii0_rxc		0	I	PD	PD	15	1.8/3.3	vddshv9	Yes	Dual Voltage LVCMOS	PU/PD	0
		rmii1_txen		2	O									
		mii0_txclk		3	I									0
		vin2a_d5		4	I									0
		vin4b_d5		5	I									0
		pr1_mii_mt0_clk		11	I									0
		pr2_pru1_gpi11		12	I									
		pr2_pru1_gpo11		13	O									
		gpio5_26		14	IO									
		Driver off		15	I									
V5	rgmii0_rxctl	rgmii0_rxctl		0	I	PD	PD	15	1.8/3.3	vddshv9	Yes	Dual Voltage LVCMOS	PU/PD	0
		rmii1_txd1		2	O									
		mii0_txd3		3	O									
		vin2a_d6		4	I									0
		vin4b_d6		5	I									0
		pr1_mii0_txd3		11	O									
		pr2_pru1_gpi12		12	I									
		pr2_pru1_gpo12		13	O									
		gpio5_27		14	IO									
		Driver off		15	I									

表 4-2. Ball Characteristics[(1)] (continued)

BALL NUMBER [1]	BALL NAME [2]	SIGNAL NAME [3]	PN [4]	MUXMODE [5]	TYPE [6]	BALL RESET STATE [7]	BALL RESET REL. STATE [8]	BALL RESET REL. MUXMODE [9]	I/O VOLTAGE VALUE [10]	POWER [11]	HYS [12]	BUFFER TYPE [13]	PULL UP/DOWN TYPE [14]	DSIS [15]
W2	rgmii0_rxd0	rgmii0_rxd0		0	I	PD	PD	15	1.8/3.3	vddshv9	Yes	Dual Voltage LVCMOS	PU/PD	0
		rmii0_txd0		1	O									
		mii0_txd0		3	O									
		vin2a_fld0		4	I									
		vin4b_fld1		5	I									0
		pr1_mii0_txd0		11	O									
		pr2_pru1_gpi16		12	I									
		pr2_pru1_gpo16		13	O									
		gpio5_31		14	IO									
		Driver off		15	I									
Y2	rgmii0_rxd1	rgmii0_rxd1		0	I	PD	PD	15	1.8/3.3	vddshv9	Yes	Dual Voltage LVCMOS	PU/PD	0
		rmii0_txd1		1	O									
		mii0_txd1		3	O									
		vin2a_d9		4	I									0
		pr1_mii0_txd1		11	O									
		pr2_pru1_gpi15		12	I									
		pr2_pru1_gpo15		13	O									
		gpio5_30		14	IO									
		Driver off		15	I									
V3	rgmii0_rxd2	rgmii0_rxd2		0	I	PD	PD	15	1.8/3.3	vddshv9	Yes	Dual Voltage LVCMOS	PU/PD	0
		rmii0_txen		1	O									
		mii0_txen		3	O									
		vin2a_d8		4	I									0
		pr1_mii0_txen		11	O									
		pr2_pru1_gpi14		12	I									
		pr2_pru1_gpo14		13	O									
		gpio5_29		14	IO									
		Driver off		15	I									

Copyright © 2015–2019, Texas Instruments Incorporated

表 4-2. Ball Characteristics[(1)] (continued)

BALL NUMBER [1]	BALL NAME [2]	SIGNAL NAME [3]	PN [4]	MUXMODE [5]	TYPE [6]	BALL RESET STATE [7]	BALL RESET REL. STATE [8]	BALL RESET REL. MUXMODE [9]	I/O VOLTAGE VALUE [10]	POWER [11]	HYS [12]	BUFFER TYPE [13]	PULL UP/DOWN TYPE [14]	DSIS [15]
V4	rgmii0_rxd3	rgmii0_rxd3		0	I	PD	PD	15	1.8/3.3	vddshv9	Yes	Dual Voltage LVCMOS	PU/PD	0
		rmii1_txd0		2	O									
		mii0_txd2		3	O									
		vin2a_d7		4	I									0
		vin4b_d7		5	I									0
		pr1_mii0_txd2		11	O									
		pr2_pru1_gpi13		12	I									
		pr2_pru1_gpo13		13	O									
		gpio5_28		14	IO									
		Driver off		15	I									
W9	rgmii0_txc	rgmii0_txc		0	O	PD	PD	15	1.8/3.3	vddshv9	Yes	Dual Voltage LVCMOS	PU/PD	
		uart3_ctsn		1	I									1
		rmii1_rxd1		2	I									0
		mii0_rxd3		3	I									0
		vin2a_d3		4	I									0
		vin4b_d3		5	I									0
		spi3_d0		7	IO									0
		spi4_cs2		8	IO									1
		pr1_mii0_rxd3		11	I									0
		pr2_pru1_gpi5		12	I									
		pr2_pru1_gpo5		13	O									
		gpio5_20		14	IO									
		Driver off		15	I									
V9	rgmii0_txctl	rgmii0_txctl		0	O	PD	PD	15	1.8/3.3	vddshv9	Yes	Dual Voltage LVCMOS	PU/PD	
		uart3_rtsn		1	O									
		rmii1_rxd0		2	I									0
		mii0_rxd2		3	I									0
		vin2a_d4		4	I									0
		vin4b_d4		5	I									0
		spi3_cs0		7	IO									1
		spi4_cs3		8	IO									1
		pr1_mii0_rxd2		11	I									0
		pr2_pru1_gpi6		12	I									
		pr2_pru1_gpo6		13	O									
		gpio5_21		14	IO									
		Driver off		15	I									

表 4-2. Ball Characteristics[(1)] (continued)

BALL NUMBER [1]	BALL NAME [2]	SIGNAL NAME [3]	PN [4]	MUXMODE [5]	TYPE [6]	BALL RESET STATE [7]	BALL RESET REL. STATE [8]	BALL RESET REL. MUXMODE [9]	I/O VOLTAGE VALUE [10]	POWER [11]	HYS [12]	BUFFER TYPE [13]	PULL UP/DOWN TYPE [14]	DSIS [15]
U6	rgmii0_txd0	rgmii0_txd0		0	O	PD	PD	15	1.8/3.3	vddshv9	Yes	Dual Voltage LVCMOS	PU/PD	
		rmii0_rxd0		1	I									0
		mii0_rxd0		3	I									0
		vin2a_d10		4	I									0
		spi4_cs0		7	IO									1
		uart4_rtsn		8	O									
		pr1_mii0_rxd0		11	I									0
		pr2_pru1_gpi10		12	I									
		pr2_pru1_gpo10		13	O									
		gpio5_25		14	IO									
		Driver off		15	I									
V6	rgmii0_txd1	rgmii0_txd1		0	O	PD	PD	15	1.8/3.3	vddshv9	Yes	Dual Voltage LVCMOS	PU/PD	
		rmii0_rxd1		1	I									0
		mii0_rxd1		3	I									0
		vin2a_vsync0		4	I									
		vin4b_vsync1		5	I									0
		spi4_d0		7	IO									0
		uart4_ctsn		8	IO									1
		pr1_mii0_rxd1		11	I									0
		pr2_pru1_gpi9		12	I									
		pr2_pru1_gpo9		13	O									
		gpio5_24		14	IO									
		Driver off		15	I									
U7	rgmii0_txd2	rgmii0_txd2		0	O	PD	PD	15	1.8/3.3	vddshv9	Yes	Dual Voltage LVCMOS	PU/PD	
		rmii0_rxer		1	I									0
		mii0_rxer		3	I									0
		vin2a_hsync0		4	I									
		vin4b_hsync1		5	I									0
		spi4_d1		7	IO									0
		uart4_txd		8	O									
		pr1_mii0_rxer		11	I									0
		pr2_pru1_gpi8		12	I									
		pr2_pru1_gpo8		13	O									
		gpio5_23		14	IO									
		Driver off		15	I									

Copyright © 2015–2019, Texas Instruments Incorporated

表 4-2. Ball Characteristics[(1)] (continued)

BALL NUMBER [1]	BALL NAME [2]	SIGNAL NAME [3]	PN [4]	MUXMODE [5]	TYPE [6]	BALL RESET STATE [7]	BALL RESET REL. STATE [8]	BALL RESET REL. MUXMODE [9]	I/O VOLTAGE VALUE [10]	POWER [11]	HYS [12]	BUFFER TYPE [13]	PULL UP/DOWN TYPE [14]	DSIS [15]
V7	rgmii0_txd3	rgmii0_txd3		0	O	PD	PD	15	1.8/3.3	vddshv9	Yes	Dual Voltage LVCMOS	PU/PD	
		rmii0_crs		1	I									0
		mii0_crs		3	I									0
		vin2a_de0		4	I									
		vin4b_de1		5	I									0
		spi4_sclk		7	IO									0
		uart4_rxd		8	I									1
		pr1_mii0_crs		11	I									0
		pr2_pru1_gpi7		12	I									
		pr2_pru1_gpo7		13	O									
		gpio5_22		14	IO									
		Driver off		15	I									
U3	RMII_MHZ_50_CLK	RMII_MHZ_50_CLK		0	IO	PD	PD	15	1.8/3.3	vddshv9	Yes	Dual Voltage LVCMOS	PU/PD	0
		vin2a_d11		4	I									0
		pr2_pru1_gpi2		12	I									
		pr2_pru1_gpo2		13	O									
		gpio5_17		14	IO									
		Driver off		15	I									
F23	rstoutn	rstoutn		0	O	PD	drive 1 (OFF)		1.8/3.3	vddshv3	Yes	Dual Voltage LVCMOS	PU/PD	
E18	rtck	rtck		0	O	PU	drive clk (OFF)	0	1.8/3.3	vddshv3	Yes	Dual Voltage LVCMOS	PU/PD	
		gpio8_29		14	IO									
AF14	rtc_iso	rtc_iso		0	I				1.8/3.3	vddshv5	Yes	IHHV1833	PU/PD	
AE14	rtc_osc_xi_clkin32	rtc_osc_xi_clkin32		0	I				1.8	vdda_rtc	No	LVCMOS OSC		
AD14	rtc_osc_xo	rtc_osc_xo		0	O				1.8	vdda_rtc	No	LVCMOS OSC		
AB17	rtc_porz	rtc_porz		0	I				1.8/3.3	vddshv5	Yes	IHHV1833	PU/PD	
AH9	sata1_rxn0	sata1_rxn0		0	I	OFF	OFF		1.8	vdda_sata		SATAPHY		
AG9	sata1_rxp0	sata1_rxp0		0	I	OFF	OFF		1.8	vdda_sata		SATAPHY		
AG10	sata1_txn0	sata1_txn0		0	O				1.8	vdda_sata		SATAPHY		
AH10	sata1_txp0	sata1_txp0		0	O				1.8	vdda_sata		SATAPHY		
A24	spi1_cs0	spi1_cs0		0	IO	PU	PU	15	1.8/3.3	vddshv3	Yes	Dual Voltage LVCMOS	PU/PD	1
		gpio7_10		14	IO									
		Driver off		15	I									

表 4-2. Ball Characteristics[(1)] (continued)

BALL NUMBER [1]	BALL NAME [2]	SIGNAL NAME [3]	PN [4]	MUXMODE [5]	TYPE [6]	BALL RESET STATE [7]	BALL RESET REL. STATE [8]	BALL RESET REL. MUXMODE [9]	I/O VOLTAGE VALUE [10]	POWER [11]	HYS [12]	BUFFER TYPE [13]	PULL UP/DOWN TYPE [14]	DSIS [15]
A22	spi1_cs1	spi1_cs1		0	IO	PU	PU	15	1.8/3.3	vddshv3	Yes	Dual Voltage LVCMOS	PU/PD	1
		sata1_led		2	O									
		spi2_cs1		3	IO									1
		gpio7_11		14	IO									
		Driver off		15	I									
B21	spi1_cs2	spi1_cs2		0	IO	PU	PU	15	1.8/3.3	vddshv3	Yes	Dual Voltage LVCMOS	PU/PD	1
		uart4_rxd		1	I									1
		mmc3_sdcd		2	I									1
		spi2_cs2		3	IO									1
		dcan2_tx		4	IO									1
		mdio_mclk		5	O									1
		hdmi1_hpd	No	6	I									
		gpio7_12		14	IO									
		Driver off		15	I									
B20	spi1_cs3	spi1_cs3		0	IO	PU	PU	15	1.8/3.3	vddshv3	Yes	Dual Voltage LVCMOS	PU/PD	1
		uart4_txd		1	O									
		mmc3_sdwp		2	I									0
		spi2_cs3		3	IO									1
		dcan2_rx		4	IO									1
		mdio_d		5	IO									1
		hdmi1_cec	No	6	IO									
		gpio7_13		14	IO									
		Driver off		15	I									
B25	spi1_d0	spi1_d0		0	IO	PD	PD	15	1.8/3.3	vddshv3	Yes	Dual Voltage LVCMOS	PU/PD	0
		gpio7_9		14	IO									
		Driver off		15	I									
F16	spi1_d1	spi1_d1		0	IO	PD	PD	15	1.8/3.3	vddshv3	Yes	Dual Voltage LVCMOS	PU/PD	0
		gpio7_8		14	IO									
		Driver off		15	I									
A25	spi1_sclk	spi1_sclk		0	IO	PD	PD	15	1.8/3.3	vddshv3	Yes	Dual Voltage LVCMOS	PU/PD	0
		gpio7_7		14	IO									
		Driver off		15	I									
B24	spi2_cs0	spi2_cs0		0	IO	PU	PU	15	1.8/3.3	vddshv3	Yes	Dual Voltage LVCMOS	PU/PD	1
		uart3_rtsn		1	O									
		uart5_txd		2	O									
		gpio7_17		14	IO									
		Driver off		15	I									

Copyright © 2015–2019, Texas Instruments Incorporated

表 4-2. Ball Characteristics[(1)] (continued)

BALL NUMBER [1]	BALL NAME [2]	SIGNAL NAME [3]	PN [4]	MUXMODE [5]	TYPE [6]	BALL RESET STATE [7]	BALL RESET REL. STATE [8]	BALL RESET REL. MUXMODE [9]	I/O VOLTAGE VALUE [10]	POWER [11]	HYS [12]	BUFFER TYPE [13]	PULL UP/DOWN TYPE [14]	DSIS [15]
G17	spi2_d0	spi2_d0		0	IO	PD	PD	15	1.8/3.3	vddshv3	Yes	Dual Voltage LVCMOS	PU/PD	0
		uart3_ctsn		1	I									1
		uart5_rxd		2	I									1
		gpio7_16		14	IO									
		Driver off		15	I									
B22	spi2_d1	spi2_d1		0	IO	PD	PD	15	1.8/3.3	vddshv3	Yes	Dual Voltage LVCMOS	PU/PD	0
		uart3_txd		1	O									
		gpio7_15		14	IO									
		Driver off		15	I									
A26	spi2_sclk	spi2_sclk		0	IO	PD	PD	15	1.8/3.3	vddshv3	Yes	Dual Voltage LVCMOS	PU/PD	0
		uart3_rxd		1	I									1
		gpio7_14		14	IO									
		Driver off		15	I									
E20	tclk	tclk		0	I	PU	PU	0	1.8/3.3	vddshv3	Yes	IQ1833	PU/PD	
D23	tdi	tdi		0	I	PU	PU	0	1.8/3.3	vddshv3	Yes	Dual Voltage LVCMOS	PU/PD	
		gpio8_27		14	I									
F19	tdo	tdo		0	O	PU	PU	0	1.8/3.3	vddshv3	Yes	Dual Voltage LVCMOS	PU/PD	
		gpio8_28		14	IO									
F18	tms	tms		0	IO	OFF	OFF	0	1.8/3.3	vddshv3	Yes	Dual Voltage LVCMOS	PU/PD	
D20	trstn	trstn		0	I	PD	PD		1.8/3.3	vddshv3	Yes	Dual Voltage LVCMOS	PU/PD	
E25	uart1_ctsn	uart1_ctsn		0	I	PU	PU	15	1.8/3.3	vddshv4	Yes	Dual Voltage LVCMOS	PU/PD	1
		uart9_rxd		2	I									1
		mmc4_clk		3	IO									1
		gpio7_24		14	IO									
		Driver off		15	I									
C27	uart1_rtsn	uart1_rtsn		0	O	PU	PU	15	1.8/3.3	vddshv4	Yes	Dual Voltage LVCMOS	PU/PD	
		uart9_txd		2	O									
		mmc4_cmd		3	IO									1
		gpio7_25		14	IO									
		Driver off		15	I									
B27	uart1_rxd	uart1_rxd		0	I	PU	PU	15	1.8/3.3	vddshv4	Yes	Dual Voltage LVCMOS	PU/PD	1
		mmc4_sdcd		3	I									1
		gpio7_22		14	IO									
		Driver off		15	I									

Copyright © 2015–2019, Texas Instruments Incorporated

表 4-2. Ball Characteristics[(1)] (continued)

BALL NUMBER [1]	BALL NAME [2]	SIGNAL NAME [3]	PN [4]	MUXMODE [5]	TYPE [6]	BALL RESET STATE [7]	BALL RESET REL. STATE [8]	BALL RESET REL. MUXMODE [9]	I/O VOLTAGE VALUE [10]	POWER [11]	HYS [12]	BUFFER TYPE [13]	PULL UP/DOWN TYPE [14]	DSIS [15]
C26	uart1_txd	uart1_txd		0	O	PU	PU	15	1.8/3.3	vddshv4	Yes	Dual Voltage LVCMOS	PU/PD	
		mmc4_sdwp		3	I									0
		gpio7_23		14	IO									
		Driver off		15	I									
D27	uart2_ctsn	uart2_ctsn		0	I	PU	PU	15	1.8/3.3	vddshv4	Yes	Dual Voltage LVCMOS	PU/PD	1
		uart3_rxd		2	I									1
		mmc4_dat2		3	IO									1
		uart10_rxd		4	I									1
		uart1_dtrn		5	O									
		gpio1_16		14	IO									
		Driver off		15	I									
C28	uart2_rtsn	uart2_rtsn		0	O	PU	PU	15	1.8/3.3	vddshv4	Yes	Dual Voltage LVCMOS	PU/PD	
		uart3_txd		1	O									
		uart3_irtx		2	O									
		mmc4_dat3		3	IO									1
		uart10_txd		4	O									
		uart1_rin		5	I									1
		gpio1_17		14	IO									
		Driver off		15	I									
D28	uart2_rxd	uart3_ctsn		1	I	PU	PU	15	1.8/3.3	vddshv4	Yes	Dual Voltage LVCMOS	PU/PD	1
		uart3_rctx		2	O									
		mmc4_dat0		3	IO									1
		uart2_rxd		4	I									1
		uart1_dcdn		5	I									1
		gpio7_26		14	IO									
		Driver off		15	I									
D26	uart2_txd	uart2_txd		0	O	PU	PU	15	1.8/3.3	vddshv4	Yes	Dual Voltage LVCMOS	PU/PD	
		uart3_rtsn		1	O									
		uart3_sd		2	O									
		mmc4_dat1		3	IO									1
		uart2_txd		4	O									
		uart1_dsrn		5	I									0
		gpio7_27		14	IO									
		Driver off		15	I									

Copyright © 2015–2019, Texas Instruments Incorporated

表 4-2. Ball Characteristics[(1)] (continued)

BALL NUMBER [1]	BALL NAME [2]	SIGNAL NAME [3]	PN [4]	MUXMODE [5]	TYPE [6]	BALL RESET STATE [7]	BALL RESET REL. STATE [8]	BALL RESET REL. MUXMODE [9]	I/O VOLTAGE VALUE [10]	POWER [11]	HYS [12]	BUFFER TYPE [13]	PULL UP/DOWN TYPE [14]	DSIS [15]
V2	uart3_rxd	uart3_rxd		0	I	PD	PD	15	1.8/3.3	vddshv9	Yes	Dual Voltage LVCMOS	PU/PD	1
		rmii1_crs		2	I									0
		mii0_rxdv		3	I									0
		vin2a_d1		4	I									0
		vin4b_d1		5	I									0
		spi3_sclk		7	IO									0
		pr1_mii0_rxdv		11	I									0
		pr2_pru1_gpi3		12	I									
		pr2_pru1_gpo3		13	O									
		gpio5_18		14	IO									
		Driver off		15	I									
Y1	uart3_txd	uart3_txd		0	O	PD	PD	15	1.8/3.3	vddshv9	Yes	Dual Voltage LVCMOS	PU/PD	
		rmii1_rxer		2	I									0
		mii0_rxclk		3	I									0
		vin2a_d2		4	I									0
		vin4b_d2		5	I									0
		spi3_d1		7	IO									0
		spi4_cs1		8	IO									1
		pr1_mii_mr0_clk		11	I									0
		pr2_pru1_gpi4		12	I									
		pr2_pru1_gpo4		13	O									
		gpio5_19		14	IO									
		Driver off		15	I									
AC12	usb1_dm	usb1_dm		0	IO	OFF	OFF		3.3	vdda33v_usb1		USB3PHY		
AD12	usb1_dp	usb1_dp		0	IO	OFF	OFF		3.3	vdda33v_usb1		USB3PHY		
AB10	usb1_drvvbus	usb1_drvvbus		0	O	PD	PD	15	1.8/3.3	vddshv6	Yes	Dual Voltage LVCMOS	PU/PD	
		timer16		7	IO									
		gpio6_12		14	IO									
		Driver off		15	I									
AF11	usb2_dm	usb2_dm		0	IO				3.3	vdda33v_usb2	No	USB2PHY		
AE11	usb2_dp	usb2_dp		0	IO				3.3	vdda33v_usb2	No	USB2PHY		
AC10	usb2_drvvbus	usb2_drvvbus		0	O	PD	PD	15	1.8/3.3	vddshv6	Yes	Dual Voltage LVCMOS	PU/PD	
		timer15		7	IO									
		gpio6_13		14	IO									
		Driver off		15	I									

表 4-2. Ball Characteristics[(1)] (continued)

BALL NUMBER [1]	BALL NAME [2]	SIGNAL NAME [3]	PN [4]	MUXMODE [5]	TYPE [6]	BALL RESET STATE [7]	BALL RESET REL. STATE [8]	BALL RESET REL. MUXMODE [9]	I/O VOLTAGE VALUE [10]	POWER [11]	HYS [12]	BUFFER TYPE [13]	PULL UP/DOWN TYPE [14]	DSIS [15]
AF12	usb_rxn0	usb_rxn0		0	I	OFF	OFF		1.8	vdda_usb1				
AE12	usb_rxp0	usb_rxp0		0	I	OFF	OFF		1.8	vdda_usb1				
AC11	usb_txn0	usb_txn0		0	O				1.8	vdda_usb1				
AD11	usb_txp0	usb_txp0		0	O				1.8	vdda_usb1				
H13, H14, J17, J18, L7, L8, N10, N13, P11, P12, P13, R11, R16, R19, T13, T16, T19, U13, U16, U8, U9, V16, V8	vdd	vdd			PWR									
AA12	vdda33v_usb1	vdda33v_usb1			PWR									
Y12	vdda33v_usb2	vdda33v_usb2			PWR									
M14	vdda_abe_per	vdda_abe_per			PWR									
P16	vdda_ddr	vdda_ddr			PWR									
N11	vdda_debug	vdda_debug			PWR									
N12	vdda_dsp_eve	vdda_dsp_eve			PWR									
P15	vdda_gmac_core	vdda_gmac_core			PWR									
R14	vdda_gpu	vdda_gpu			PWR									
Y17	vdda_hdmi	vdda_hdmi			PWR									
R17	vdda_iva	vdda_iva			PWR									
N16	vdda_mpu	vdda_mpu			PWR									
AD16, AE16	vdda_osc	vdda_osc			PWR									
W14	vdda_pcie	vdda_pcie			PWR									
AA17	vdda_pcie0	vdda_pcie0			PWR									
AA16	vdda_pcie1	vdda_pcie1			PWR									
AB13	vdda_rtc	vdda_rtc			PWR									
V13	vdda_sata	vdda_sata			PWR									
AA13	vdda_usb1	vdda_usb1			PWR									
AB12	vdda_usb2	vdda_usb2			PWR									
W12	vdda_usb3	vdda_usb3			PWR									
P14	vdda_video	vdda_video			PWR									
G18, H17, M8, M9, N8, P8, R8, T8, V21, V22, W17, W18	vdds18v	vdds18v			PWR									
AA18, AA19, W21, Y21	vdds18v_ddr1	vdds18v_ddr1			PWR									
J21, J22, N21, P20, P21	vdds18v_ddr2	vdds18v_ddr2			PWR									
E3, E5, G4, G5, H8, H9	vddshv1	vddshv1			PWR									

Copyright © 2015–2019, Texas Instruments Incorporated

表 4-2. Ball Characteristics[(1)] (continued)

BALL NUMBER [1]	BALL NAME [2]	SIGNAL NAME [3]	PN [4]	MUXMODE [5]	TYPE [6]	BALL RESET STATE [7]	BALL RESET REL. STATE [8]	BALL RESET REL. MUXMODE [9]	I/O VOLTAGE VALUE [10]	POWER [11]	HYS [12]	BUFFER TYPE [13]	PULL UP/DOWN TYPE [14]	DSIS [15]
N4, N5, P10, R10, R7, T4, T5	vddshv10	vddshv10			PWR									
J8, K8	vddshv11	vddshv11			PWR									
B6, D10, E10, H10, H11	vddshv2	vddshv2			PWR									
B23, D16, D22, E16, E22, G15, H15, H16, H18, H19	vddshv3	vddshv3			PWR									
C24	vddshv4	vddshv4			PWR									
V12	vddshv5	vddshv5			PWR									
AD5, AD7, AE7, AF5	vddshv6	vddshv6			PWR									
AB6, AB7	vddshv7	vddshv7			PWR									
W8, Y8	vddshv8	vddshv8			PWR									
U10, W4, W5	vddshv9	vddshv9			PWR									
AA21, AA22, AB21, AB22, AB24, AB25, AC22, AD26, AG20, AG28, AH27, W16, W27	vdds_ddr1	vdds_ddr1			PWR									
E24, G22, G23, H20, H21, H22, J27, L20, L21, M20, M21, T24, T25	vdds_ddr2	vdds_ddr2			PWR									
AA7, Y7	vdds_mlbp	vdds_mlbp			PWR									
J13, K10, K11, K12, K13, L10, L11, L12, M10, M11, M12, M13	vdd_dspeve	vdd_dspeve			PWR									
U11, U12, V10, V11, V14, W10, W11, W13	vdd_gpu	vdd_gpu			PWR									
U18, U19, V18, V19	vdd_iva	vdd_iva			PWR									
K17, K18, L15, L16, L17, L18, L19, M15, M16, M17, M18, N17, N18, P17, P18, R18	vdd_mpu	vdd_mpu			PWR									
AB15	vdd_rtc	vdd_rtc			PWR									
AG8	vin1a_clk0	vin1a_clk0		0	I	PD	PD	15	1.8/3.3	vddshv6	Yes	Dual Voltage LVCMOS	PU/PD	0
		vout3_d16 [(8)]	No	3	O									
		vout3_fld [(8)]	No	4	O									
		gpio2_30		14	IO									
		Driver off		15	I									

表 4-2. Ball Characteristics[(1)] (continued)

BALL NUMBER [1]	BALL NAME [2]	SIGNAL NAME [3]	PN [4]	MUXMODE [5]	TYPE [6]	BALL RESET STATE [7]	BALL RESET REL. STATE [8]	BALL RESET REL. MUXMODE [9]	I/O VOLTAGE VALUE [10]	POWER [11]	HYS [12]	BUFFER TYPE [13]	PULL UP/DOWN TYPE [14]	DSIS [15]
AE8	vin1a_d0	vin1a_d0		0	I	PD	PD	15	1.8/3.3	vddshv6	Yes	Dual Voltage LVCMOS	PU/PD	0
		vout3_d7 [(8)]	No	3	O									
		vout3_d23 [(8)]	No	4	O									
		uart8_rxd		5	I									1
		ehrpwm1A		10	O									
		gpio3_4		14	IO									
		Driver off		15	I									
AD8	vin1a_d1	vin1a_d1		0	I	PD	PD	15	1.8/3.3	vddshv6	Yes	Dual Voltage LVCMOS	PU/PD	0
		vout3_d6 [(8)]	No	3	O									
		vout3_d22 [(8)]	No	4	O									
		uart8_txd		5	O									
		ehrpwm1B		10	O									
		gpio3_5		14	IO									
		Driver off		15	I									
AG3	vin1a_d10	vin1a_d10		0	I	PD	PD	15	1.8/3.3	vddshv6	Yes	Dual Voltage LVCMOS	PU/PD	0
		vin1b_d5		1	I									0
		vout3_d13 [(8)]	No	4	O									
		kbd_row4		9	I									0
		pr1_edc_latch0_in		10	I									0
		pr1_pru0_gpi7		12	I									
		pr1_pru0_gpo7		13	O									
		gpio3_14		14	IO									
		Driver off		15	I									
AG5	vin1a_d11	vin1a_d11		0	I	PD	PD	15	1.8/3.3	vddshv6	Yes	Dual Voltage LVCMOS	PU/PD	0
		vin1b_d4		1	I									0
		vout3_d12 [(8)]	No	4	O									
		gpmc_a23		5	O									
		kbd_row5		9	I									0
		pr1_edc_latch1_in		10	I									0
		pr1_pru0_gpi8		12	I									
		pr1_pru0_gpo8		13	O									
		gpio3_15		14	IO									
		Driver off		15	I									

Copyright © 2015–2019, Texas Instruments Incorporated

表 4-2. Ball Characteristics[(1)] (continued)

BALL NUMBER [1]	BALL NAME [2]	SIGNAL NAME [3]	PN [4]	MUXMODE [5]	TYPE [6]	BALL RESET STATE [7]	BALL RESET REL. STATE [8]	BALL RESET REL. MUXMODE [9]	I/O VOLTAGE VALUE [10]	POWER [11]	HYS [12]	BUFFER TYPE [13]	PULL UP/DOWN TYPE [14]	DSIS [15]
AF2	vin1a_d12	vin1a_d12		0	I	PD	PD	15	1.8/3.3	vddshv6	Yes	Dual Voltage LVCMOS	PU/PD	0
		vin1b_d3		1	I									0
		vout3_d11 [(8)]	No	4	O									
		gpmc_a24		5	O									
		kbd_row6		9	I									0
		pr1_edc_sync0_out		10	O									
		pr1_pru0_gpi9		12	I									
		pr1_pru0_gpo9		13	O									
		gpio3_16		14	IO									
		Driver off		15	I									
AF6	vin1a_d13	vin1a_d13		0	I	PD	PD	15	1.8/3.3	vddshv6	Yes	Dual Voltage LVCMOS	PU/PD	0
		vin1b_d2		1	I									0
		vout3_d10 [(8)]	No	4	O									
		gpmc_a25		5	O									
		kbd_row7		9	I									0
		pr1_edc_sync1_out		10	O									
		pr1_pru0_gpi10		12	I									
		pr1_pru0_gpo10		13	O									
		gpio3_17		14	IO									
		Driver off		15	I									
AF3	vin1a_d14	vin1a_d14		0	I	PD	PD	15	1.8/3.3	vddshv6	Yes	Dual Voltage LVCMOS	PU/PD	0
		vin1b_d1		1	I									0
		vout3_d9 [(8)]	No	4	O									
		gpmc_a26		5	O									
		kbd_row8		9	I									0
		pr1_edio_latch_in		10	I									0
		pr1_pru0_gpi11		12	I									
		pr1_pru0_gpo11		13	O									
		gpio3_18		14	IO									
		Driver off		15	I									

表 4-2. Ball Characteristics[(1)] (continued)

BALL NUMBER [1]	BALL NAME [2]	SIGNAL NAME [3]	PN [4]	MUXMODE [5]	TYPE [6]	BALL RESET STATE [7]	BALL RESET REL. STATE [8]	BALL RESET REL. MUXMODE [9]	I/O VOLTAGE VALUE [10]	POWER [11]	HYS [12]	BUFFER TYPE [13]	PULL UP/DOWN TYPE [14]	DSIS [15]
AF4	vin1a_d15	vin1a_d15		0	I	PD	PD	15	1.8/3.3	vddshv6	Yes	Dual Voltage LVCMOS	PU/PD	0
		vin1b_d0		1	I									0
		vout3_d8 [(8)]	No	4	O									
		gpmc_a27		5	O									
		kbd_col0		9	O									
		pr1_edio_sof		10	O									
		pr1_pru0_gpi12		12	I									
		pr1_pru0_gpo12		13	O									
		gpio3_19		14	IO									
		Driver off		15	I									
AF1	vin1a_d16	vin1a_d16		0	I	PD	PD	15	1.8/3.3	vddshv6	Yes	Dual Voltage LVCMOS	PU/PD	0
		vin1b_d7		1	I									0
		vout3_d7 [(8)]	No	4	O									
		vin3a_d0		6	I									0
		kbd_col1		9	O									
		pr1_edio_data_in0		10	I									0
		pr1_edio_data_out0		11	O									
		pr1_pru0_gpi13		12	I									
		pr1_pru0_gpo13		13	O									
		gpio3_20		14	IO									
		Driver off		15	I									
AE3	vin1a_d17	vin1a_d17		0	I	PD	PD	15	1.8/3.3	vddshv6	Yes	Dual Voltage LVCMOS	PU/PD	0
		vin1b_d6		1	I									0
		vout3_d6 [(8)]	No	4	O									
		vin3a_d1		6	I									0
		kbd_col2		9	O									
		pr1_edio_data_in1		10	I									0
		pr1_edio_data_out1		11	O									
		pr1_pru0_gpi14		12	I									
		pr1_pru0_gpo14		13	O									
		gpio3_21		14	IO									
		Driver off		15	I									

Copyright © 2015–2019, Texas Instruments Incorporated

表 4-2. Ball Characteristics[(1)] (continued)

BALL NUMBER [1]	BALL NAME [2]	SIGNAL NAME [3]	PN [4]	MUXMODE [5]	TYPE [6]	BALL RESET STATE [7]	BALL RESET REL. STATE [8]	BALL RESET REL. MUXMODE [9]	I/O VOLTAGE VALUE [10]	POWER [11]	HYS [12]	BUFFER TYPE [13]	PULL UP/DOWN TYPE [14]	DSIS [15]
AE5	vin1a_d18	vin1a_d18		0	I	PD	PD	15	1.8/3.3	vddshv6	Yes	Dual Voltage LVCMOS	PU/PD	0
		vin1b_d5		1	I									0
		vout3_d5 [(8)]	No	4	O									
		vin3a_d2		6	I									0
		kbd_col3		9	O									
		pr1_edio_data_in2		10	I									0
		pr1_edio_data_out2		11	O									
		pr1_pru0_gpi15		12	I									
		pr1_pru0_gpo15		13	O									
		gpio3_22		14	IO									
		Driver off		15	I									
AE1	vin1a_d19	vin1a_d19		0	I	PD	PD	15	1.8/3.3	vddshv6	Yes	Dual Voltage LVCMOS	PU/PD	0
		vin1b_d4		1	I									0
		vout3_d4 [(8)]	No	4	O									
		vin3a_d3		6	I									0
		kbd_col4		9	O									
		pr1_edio_data_in3		10	I									0
		pr1_edio_data_out3		11	O									
		pr1_pru0_gpi16		12	I									
		pr1_pru0_gpo16		13	O									
		gpio3_23		14	IO									
		Driver off		15	I									
AG7	vin1a_d2	vin1a_d2		0	I	PD	PD	15	1.8/3.3	vddshv6	Yes	Dual Voltage LVCMOS	PU/PD	0
		vout3_d5 [(8)]	No	3	O									
		vout3_d21 [(8)]	No	4	O									
		uart8_ctsn		5	I									1
		ehrpwm1_tripzone_input		10	IO									0
		gpio3_6		14	IO									
		Driver off		15	I									

表 4-2. Ball Characteristics[(1)] (continued)

BALL NUMBER [1]	BALL NAME [2]	SIGNAL NAME [3]	PN [4]	MUXMODE [5]	TYPE [6]	BALL RESET STATE [7]	BALL RESET REL. STATE [8]	BALL RESET REL. MUXMODE [9]	I/O VOLTAGE VALUE [10]	POWER [11]	HYS [12]	BUFFER TYPE [13]	PULL UP/DOWN TYPE [14]	DSIS [15]
AE2	vin1a_d20	vin1a_d20		0	I	PD	PD	15	1.8/3.3	vddshv6	Yes	Dual Voltage LVCMOS	PU/PD	0
		vin1b_d3		1	I									0
		vout3_d3 [(8)]	No	4	O									
		vin3a_d4		6	I									0
		kbd_col5		9	O									
		pr1_edio_data_in4		10	I									0
		pr1_edio_data_out4		11	O									
		pr1_pru0_gpi17		12	I									
		pr1_pru0_gpo17		13	O									
		gpio3_24		14	IO									
		Driver off		15	I									
AE6	vin1a_d21	vin1a_d21		0	I	PD	PD	15	1.8/3.3	vddshv6	Yes	Dual Voltage LVCMOS	PU/PD	0
		vin1b_d2		1	I									0
		vout3_d2 [(8)]	No	4	O									
		vin3a_d5		6	I									0
		kbd_col6		9	O									
		pr1_edio_data_in5		10	I									0
		pr1_edio_data_out5		11	O									
		pr1_pru0_gpi18		12	I									
		pr1_pru0_gpo18		13	O									
		gpio3_25		14	IO									
		Driver off		15	I									
AD2	vin1a_d22	vin1a_d22		0	I	PD	PD	15	1.8/3.3	vddshv6	Yes	Dual Voltage LVCMOS	PU/PD	0
		vin1b_d1		1	I									0
		vout3_d1 [(8)]	No	4	O									
		vin3a_d6		6	I									0
		kbd_col7		9	O									
		pr1_edio_data_in6		10	I									0
		pr1_edio_data_out6		11	O									
		pr1_pru0_gpi19		12	I									
		pr1_pru0_gpo19		13	O									
		gpio3_26		14	IO									
		Driver off		15	I									

Copyright © 2015–2019, Texas Instruments Incorporated

表 4-2. Ball Characteristics[(1)] (continued)

BALL NUMBER [1]	BALL NAME [2]	SIGNAL NAME [3]	PN [4]	MUXMODE [5]	TYPE [6]	BALL RESET STATE [7]	BALL RESET REL. STATE [8]	BALL RESET REL. MUXMODE [9]	I/O VOLTAGE VALUE [10]	POWER [11]	HYS [12]	BUFFER TYPE [13]	PULL UP/DOWN TYPE [14]	DSIS [15]
AD3	vin1a_d23	vin1a_d23		0	I	PD	PD	15	1.8/3.3	vddshv6	Yes	Dual Voltage LVCMOS	PU/PD	0
		vin1b_d0		1	I									0
		vout3_d0 [(8)]	No	4	O									
		vin3a_d7		6	I									0
		kbd_col8		9	O									
		pr1_edio_data_in7		10	I									0
		pr1_edio_data_out7		11	O									
		pr1_pru0_gpi20		12	I									
		pr1_pru0_gpo20		13	O									
		gpio3_27		14	IO									
		Driver off		15	I									
AH6	vin1a_d3	vin1a_d3		0	I	PD	PD	15	1.8/3.3	vddshv6	Yes	Dual Voltage LVCMOS	PU/PD	0
		vout3_d4 [(8)]	No	3	O									
		vout3_d20 [(8)]	No	4	O									
		uart8_rtsn		5	O									
		eCAP1_in_PWM1_out		10	IO									0
		pr1_pru0_gpi0		12	I									
		pr1_pru0_gpo0		13	O									
		gpio3_7		14	IO									
		Driver off		15	I									
AH3	vin1a_d4	vin1a_d4		0	I	PD	PD	15	1.8/3.3	vddshv6	Yes	Dual Voltage LVCMOS	PU/PD	0
		vout3_d3 [(8)]	No	3	O									
		vout3_d19 [(8)]	No	4	O									
		ehrpwm1_synci		10	I									0
		pr1_pru0_gpi1		12	I									
		pr1_pru0_gpo1		13	O									
		gpio3_8		14	IO									
		Driver off		15	I									
AH5	vin1a_d5	vin1a_d5		0	I	PD	PD	15	1.8/3.3	vddshv6	Yes	Dual Voltage LVCMOS	PU/PD	0
		vout3_d2 [(8)]	No	3	O									
		vout3_d18 [(8)]	No	4	O									
		ehrpwm1_synco		10	O									
		pr1_pru0_gpi2		12	I									
		pr1_pru0_gpo2		13	O									
		gpio3_9		14	IO									
		Driver off		15	I									

表 4-2. Ball Characteristics[(1)] (continued)

BALL NUMBER [1]	BALL NAME [2]	SIGNAL NAME [3]	PN [4]	MUXMODE [5]	TYPE [6]	BALL RESET STATE [7]	BALL RESET REL. STATE [8]	BALL RESET REL. MUXMODE [9]	I/O VOLTAGE VALUE [10]	POWER [11]	HYS [12]	BUFFER TYPE [13]	PULL UP/DOWN TYPE [14]	DSIS [15]
AG6	vin1a_d6	vin1a_d6		0	I	PD	PD	15	1.8/3.3	vddshv6	Yes	Dual Voltage LVCMOS	PU/PD	0
		vout3_d1 [(8)]	No	3	O									
		vout3_d17 [(8)]	No	4	O									
		eQEP2A_in		10	I									0
		pr1_pru0_gpi3		12	I									
		pr1_pru0_gpo3		13	O									
		gpio3_10		14	IO									
		Driver off		15	I									
AH4	vin1a_d7	vin1a_d7		0	I	PD	PD	15	1.8/3.3	vddshv6	Yes	Dual Voltage LVCMOS	PU/PD	0
		vout3_d0[(8)]	No	3	O									
		vout3_d16 [(8)]	No	4	O									
		eQEP2B_in		10	I									0
		pr1_pru0_gpi4		12	I									
		pr1_pru0_gpo4		13	O									
		gpio3_11		14	IO									
		Driver off		15	I									
AG4	vin1a_d8	vin1a_d8		0	I	PD	PD	15	1.8/3.3	vddshv6	Yes	Dual Voltage LVCMOS	PU/PD	0
		vin1b_d7		1	I									0
		vout3_d15 [(8)]	No	4	O									
		kbd_row2		9	I									0
		eQEP2_index		10	IO									0
		pr1_pru0_gpi5		12	I									
		pr1_pru0_gpo5		13	O									
		gpio3_12		14	IO									
		Driver off		15	I									
AG2	vin1a_d9	vin1a_d9		0	I	PD	PD	15	1.8/3.3	vddshv6	Yes	Dual Voltage LVCMOS	PU/PD	0
		vin1b_d6		1	I									0
		vout3_d14 [(8)]	No	4	O									
		kbd_row3		9	I									0
		eQEP2_strobe		10	IO									0
		pr1_pru0_gpi6		12	I									
		pr1_pru0_gpo6		13	O									
		gpio3_13		14	IO									
		Driver off		15	I									

Copyright © 2015–2019, Texas Instruments Incorporated

表 4-2. Ball Characteristics[(1)] (continued)

BALL NUMBER [1]	BALL NAME [2]	SIGNAL NAME [3]	PN [4]	MUXMODE [5]	TYPE [6]	BALL RESET STATE [7]	BALL RESET REL. STATE [8]	BALL RESET REL. MUXMODE [9]	I/O VOLTAGE VALUE [10]	POWER [11]	HYS [12]	BUFFER TYPE [13]	PULL UP/DOWN TYPE [14]	DSIS [15]
AD9	vin1a_de0	vin1a_de0		0	I	PD	PD	15	1.8/3.3	vddshv6	Yes	Dual Voltage LVCMOS	PU/PD	0
		vin1b_hsync1		1	I									0
		vout3_d17 [(8)]	No	3	O									
		vout3_de [(8)]	No	4	O									
		uart7_rxd		5	I									1
		timer16		7	IO									
		spi3_sclk		8	IO									0
		kbd_row0		9	I									0
		eQEP1A_in		10	I									0
		gpio3_0		14	IO									
		Driver off		15	I									
AF9	vin1a_fld0	vin1a_fld0		0	I	PD	PD	15	1.8/3.3	vddshv6	Yes	Dual Voltage LVCMOS	PU/PD	0
		vin1b_vsync1		1	I									0
		vout3_clk [(8)]	No	4	O									
		uart7_txd		5	O									
		timer15		7	IO									
		spi3_d1		8	IO									0
		kbd_row1		9	I									0
		eQEP1B_in		10	I									0
		gpio3_1		14	IO									
		Driver off		15	I									
AE9	vin1a_hsync0	vin1a_hsync0		0	I	PD	PD	15	1.8/3.3	vddshv6	Yes	Dual Voltage LVCMOS	PU/PD	0
		vin1b_fld1		1	I									0
		vout3_hsync [(8)]	No	4	O									
		uart7_ctsn		5	I									1
		timer14		7	IO									
		spi3_d0		8	IO									0
		eQEP1_index		10	IO									0
		gpio3_2		14	IO									
		Driver off		15	I									

表 4-2. Ball Characteristics[(1)] (continued)

BALL NUMBER [1]	BALL NAME [2]	SIGNAL NAME [3]	PN [4]	MUXMODE [5]	TYPE [6]	BALL RESET STATE [7]	BALL RESET REL. STATE [8]	BALL RESET REL. MUXMODE [9]	I/O VOLTAGE VALUE [10]	POWER [11]	HYS [12]	BUFFER TYPE [13]	PULL UP/DOWN TYPE [14]	DSIS [15]
AF8	vin1a_vsync0	vin1a_vsync0		0	I	PD	PD	15	1.8/3.3	vddshv6	Yes	Dual Voltage LVCMOS	PU/PD	0
		vin1b_de1		1	I									0
		vout3_vsync [(8)]	No	4	O									
		uart7_rtsn		5	O									
		timer13		7	IO									
		spi3_cs0		8	IO									1
		eQEP1_strobe		10	IO									0
		gpio3_3		14	IO									
		Driver off		15	I									
AH7	vin1b_clk1	vin1b_clk1		0	I	PD	PD	15	1.8/3.3	vddshv6	Yes	Dual Voltage LVCMOS	PU/PD	0
		vin3a_clk0		6	I									0
		gpio2_31		14	IO									
		Driver off		15	I									
E1	vin2a_clk0	vin2a_clk0		0	I	PD	PD	15	1.8/3.3	vddshv1	Yes	Dual Voltage LVCMOS	PU/PD	
		vout2_fld	No	4	O									
		emu5		5	O									
		kbd_row0		9	I									0
		eQEP1A_in		10	I									0
		pr1_edio_data_in0		12	I									0
		pr1_edio_data_out0		13	O									
		gpio3_28		14	IO									
		Driver off		15	I									
F2	vin2a_d0	vin2a_d0		0	I	PD	PD	15	1.8/3.3	vddshv1	Yes	Dual Voltage LVCMOS	PU/PD	0
		vout2_d23	No	4	O									
		emu10		5	O									
		uart9_ctsn		7	I									1
		spi4_d0		8	IO									0
		kbd_row4		9	I									0
		ehrpwm1B		10	O									
		pr1_uart0_rxd		11	I									1
		pr1_edio_data_in5		12	I									0
		pr1_edio_data_out5		13	O									
		gpio4_1		14	IO									
		Driver off		15	I									

Copyright © 2015–2019, Texas Instruments Incorporated

表 4-2. Ball Characteristics[(1)] (continued)

BALL NUMBER [1]	BALL NAME [2]	SIGNAL NAME [3]	PN [4]	MUXMODE [5]	TYPE [6]	BALL RESET STATE [7]	BALL RESET REL. STATE [8]	BALL RESET REL. MUXMODE [9]	I/O VOLTAGE VALUE [10]	POWER [11]	HYS [12]	BUFFER TYPE [13]	PULL UP/DOWN TYPE [14]	DSIS [15]
F3	vin2a_d1	vin2a_d1		0	I	PD	PD	15	1.8/3.3	vddshv1	Yes	Dual Voltage LVCMOS	PU/PD	0
		vout2_d22	No	4	O									
		emu11		5	O									
		uart9_rtsn		7	O									
		spi4_cs0		8	IO									1
		kbd_row5		9	I									0
		ehrpwm1_tripzone_input		10	IO									0
		pr1_uart0_txd		11	O									
		pr1_edio_data_in6		12	I									0
		pr1_edio_data_out6		13	O									
		gpio4_2		14	IO									
		Driver off		15	I									
D3	vin2a_d10	vin2a_d10		0	I	PD	PD	15	1.8/3.3	vddshv1	Yes	Dual Voltage LVCMOS	PU/PD	0
		mdio_mclk		3	O									1
		vout2_d13	No	4	O									
		kbd_col7		9	O									
		ehrpwm2B		10	O									
		pr1_mdio_mdclk		11	O									
		pr1_pru1_gpi7		12	I									
		pr1_pru1_gpo7		13	O									
		gpio4_11		14	IO									
		Driver off		15	I									
F6	vin2a_d11	vin2a_d11		0	I	PD	PD	15	1.8/3.3	vddshv1	Yes	Dual Voltage LVCMOS	PU/PD	0
		mdio_d		3	IO									1
		vout2_d12	No	4	O									
		kbd_row7		9	I									0
		ehrpwm2_tripzone_input		10	IO									0
		pr1_mdio_data		11	IO									1
		pr1_pru1_gpi8		12	I									
		pr1_pru1_gpo8		13	O									
		gpio4_12		14	IO									
		Driver off		15	I									

表 4-2. Ball Characteristics[(1)] (continued)

BALL NUMBER [1]	BALL NAME [2]	SIGNAL NAME [3]	PN [4]	MUXMODE [5]	TYPE [6]	BALL RESET STATE [7]	BALL RESET REL. STATE [8]	BALL RESET REL. MUXMODE [9]	I/O VOLTAGE VALUE [10]	POWER [11]	HYS [12]	BUFFER TYPE [13]	PULL UP/DOWN TYPE [14]	DSIS [15]
D5	vin2a_d12	vin2a_d12		0	I	PD	PD	15	1.8/3.3	vddshv1	Yes	Dual Voltage LVCMOS	PU/PD	0
		rgmii1_txc		3	O									
		vout2_d11	No	4	O									
		mii1_rxclk		8	I									0
		kbd_col8		9	O									
		eCAP2_in_PWM2_out		10	IO									0
		pr1_mii1_txd1		11	O									
		pr1_pru1_gpi9		12	I									
		pr1_pru1_gpo9		13	O									
		gpio4_13		14	IO									
		Driver off		15	I									
C2	vin2a_d13	vin2a_d13		0	I	PD	PD	15	1.8/3.3	vddshv1	Yes	Dual Voltage LVCMOS	PU/PD	0
		rgmii1_txctl		3	O									
		vout2_d10	No	4	O									
		mii1_rxdv		8	I									0
		kbd_row8		9	I									0
		eQEP3A_in		10	I									0
		pr1_mii1_txd0		11	O									
		pr1_pru1_gpi10		12	I									
		pr1_pru1_gpo10		13	O									
		gpio4_14		14	IO									
		Driver off		15	I									
C3	vin2a_d14	vin2a_d14		0	I	PD	PD	15	1.8/3.3	vddshv1	Yes	Dual Voltage LVCMOS	PU/PD	0
		rgmii1_txd3		3	O									
		vout2_d9	No	4	O									
		mii1_txclk		8	I									0
		eQEP3B_in		10	I									0
		pr1_mii_mr1_clk		11	I									0
		pr1_pru1_gpi11		12	I									
		pr1_pru1_gpo11		13	O									
		gpio4_15		14	IO									
		Driver off		15	I									

Copyright © 2015–2019, Texas Instruments Incorporated

表 4-2. Ball Characteristics[(1)] (continued)

BALL NUMBER [1]	BALL NAME [2]	SIGNAL NAME [3]	PN [4]	MUXMODE [5]	TYPE [6]	BALL RESET STATE [7]	BALL RESET REL. STATE [8]	BALL RESET REL. MUXMODE [9]	I/O VOLTAGE VALUE [10]	POWER [11]	HYS [12]	BUFFER TYPE [13]	PULL UP/DOWN TYPE [14]	DSIS [15]
C4	vin2a_d15	vin2a_d15		0	I	PD	PD	15	1.8/3.3	vddshv1	Yes	Dual Voltage LVCMOS	PU/PD	0
		rgmii1_txd2		3	O									
		vout2_d8	No	4	O									
		mii1_txd0		8	O									
		eQEP3_index		10	IO									0
		pr1_mii1_rxdv		11	I									0
		pr1_pru1_gpi12		12	I									
		pr1_pru1_gpo12		13	O									
		gpio4_16		14	IO									
		Driver off		15	I									
B2	vin2a_d16	vin2a_d16		0	I	PD	PD	15	1.8/3.3	vddshv1	Yes	Dual Voltage LVCMOS	PU/PD	0
		vin2b_d7		2	I									0
		rgmii1_txd1		3	O									
		vout2_d7	No	4	O									
		vin3a_d8		6	I									0
		mii1_txd1		8	O									
		eQEP3_strobe		10	IO									0
		pr1_mii1_rxd3		11	I									0
		pr1_pru1_gpi13		12	I									
		pr1_pru1_gpo13		13	O									
		gpio4_24		14	IO									
		Driver off		15	I									
D6	vin2a_d17	vin2a_d17		0	I	PD	PD	15	1.8/3.3	vddshv1	Yes	Dual Voltage LVCMOS	PU/PD	0
		vin2b_d6		2	I									0
		rgmii1_txd0		3	O									
		vout2_d6	No	4	O									
		vin3a_d9		6	I									0
		mii1_txd2		8	O									
		ehrpwm3A		10	O									
		pr1_mii1_rxd2		11	I									0
		pr1_pru1_gpi14		12	I									
		pr1_pru1_gpo14		13	O									
		gpio4_25		14	IO									
		Driver off		15	I									

表 4-2. Ball Characteristics[(1)] (continued)

BALL NUMBER [1]	BALL NAME [2]	SIGNAL NAME [3]	PN [4]	MUXMODE [5]	TYPE [6]	BALL RESET STATE [7]	BALL RESET REL. STATE [8]	BALL RESET REL. MUXMODE [9]	I/O VOLTAGE VALUE [10]	POWER [11]	HYS [12]	BUFFER TYPE [13]	PULL UP/DOWN TYPE [14]	DSIS [15]
C5	vin2a_d18	vin2a_d18		0	I	PD	PD	15	1.8/3.3	vddshv1	Yes	Dual Voltage LVCMOS	PU/PD	0
		vin2b_d5		2	I									0
		rgmii1_rxc		3	I									0
		vout2_d5	No	4	O									
		vin3a_d10		6	I									0
		mii1_txd3		8	O									
		ehrpwm3B		10	O									
		pr1_mii1_rxd1		11	I									0
		pr1_pru1_gpi15		12	I									
		pr1_pru1_gpo15		13	O									
		gpio4_26		14	IO									
		Driver off		15	I									
A3	vin2a_d19	vin2a_d19		0	I	PD	PD	15	1.8/3.3	vddshv1	Yes	Dual Voltage LVCMOS	PU/PD	0
		vin2b_d4		2	I									0
		rgmii1_rxctl		3	I									0
		vout2_d4	No	4	O									
		vin3a_d11		6	I									0
		mii1_txer		8	O									0
		ehrpwm3_tripzone_input		10	IO									0
		pr1_mii1_rxd0		11	I									0
		pr1_pru1_gpi16		12	I									
		pr1_pru1_gpo16		13	O									
		gpio4_27		14	IO									
		Driver off		15	I									
D1	vin2a_d2	vin2a_d2		0	I	PD	PD	15	1.8/3.3	vddshv1	Yes	Dual Voltage LVCMOS	PU/PD	0
		vout2_d21	No	4	O									
		emu12		5	O									
		uart10_rxd		8	I									1
		kbd_row6		9	I									0
		eCAP1_in_PWM1_out		10	IO									0
		pr1_ecap0_ecap_capin_apwm_o		11	IO									0
		pr1_edio_data_in7		12	I									0
		pr1_edio_data_out7		13	O									
		gpio4_3		14	IO									
		Driver off		15	I									

Copyright © 2015–2019, Texas Instruments Incorporated

表 4-2. Ball Characteristics[(1)] (continued)

BALL NUMBER [1]	BALL NAME [2]	SIGNAL NAME [3]	PN [4]	MUXMODE [5]	TYPE [6]	BALL RESET STATE [7]	BALL RESET REL. STATE [8]	BALL RESET REL. MUXMODE [9]	I/O VOLTAGE VALUE [10]	POWER [11]	HYS [12]	BUFFER TYPE [13]	PULL UP/DOWN TYPE [14]	DSIS [15]
B3	vin2a_d20	vin2a_d20		0	I	PD	PD	15	1.8/3.3	vddshv1	Yes	Dual Voltage LVCMOS	PU/PD	0
		vin2b_d3		2	I									0
		rgmii1_rxd3		3	I									0
		vout2_d3	No	4	O									
		vin3a_de0		5	I									0
		vin3a_d12		6	I									0
		mii1_rxer		8	I									0
		eCAP3_in_PWM3_out		10	IO									0
		pr1_mii1_rxer		11	I									0
		pr1_pru1_gpi17		12	I									
		pr1_pru1_gpo17		13	O									
		gpio4_28		14	IO									
		Driver off		15	I									
B4	vin2a_d21	vin2a_d21		0	I	PD	PD	15	1.8/3.3	vddshv1	Yes	Dual Voltage LVCMOS	PU/PD	0
		vin2b_d2		2	I									0
		rgmii1_rxd2		3	I									0
		vout2_d2	No	4	O									
		vin3a_fld0		5	I									0
		vin3a_d13		6	I									0
		mii1_col		8	I									0
		pr1_mii1_rxlink		11	I									0
		pr1_pru1_gpi18		12	I									
		pr1_pru1_gpo18		13	O									
		gpio4_29		14	IO									
		Driver off		15	I									
B5	vin2a_d22	vin2a_d22		0	I	PD	PD	15	1.8/3.3	vddshv1	Yes	Dual Voltage LVCMOS	PU/PD	0
		vin2b_d1		2	I									0
		rgmii1_rxd1		3	I									0
		vout2_d1	No	4	O									
		vin3a_hsync0		5	I									0
		vin3a_d14		6	I									0
		mii1_crs		8	I									0
		pr1_mii1_col		11	I									0
		pr1_pru1_gpi19		12	I									
		pr1_pru1_gpo19		13	O									
		gpio4_30		14	IO									
		Driver off		15	I									

Copyright © 2015–2019, Texas Instruments Incorporated

表 4-2. Ball Characteristics[(1)] (continued)

BALL NUMBER [1]	BALL NAME [2]	SIGNAL NAME [3]	PN [4]	MUXMODE [5]	TYPE [6]	BALL RESET STATE [7]	BALL RESET REL. STATE [8]	BALL RESET REL. MUXMODE [9]	I/O VOLTAGE VALUE [10]	POWER [11]	HYS [12]	BUFFER TYPE [13]	PULL UP/DOWN TYPE [14]	DSIS [15]
A4	vin2a_d23	vin2a_d23		0	I	PD	PD	15	1.8/3.3	vddshv1	Yes	Dual Voltage LVCMOS	PU/PD	0
		vin2b_d0		2	I									0
		rgmii1_rxd0		3	I									0
		vout2_d0	No	4	O									
		vin3a_vsync0		5	I									0
		vin3a_d15		6	I									0
		mii1_txen		8	O									
		pr1_mii1_crs		11	I									0
		pr1_pru1_gpi20		12	I									
		pr1_pru1_gpo20		13	O									
		gpio4_31		14	IO									
		Driver off		15	I									
E2	vin2a_d3	vin2a_d3		0	I	PD	PD	15	1.8/3.3	vddshv1	Yes	Dual Voltage LVCMOS	PU/PD	0
		vout2_d20	No	4	O									
		emu13		5	O									
		uart10_txd		8	O									
		kbd_col0		9	O									
		ehrpwm1_synci		10	I									0
		pr1_edc_latch0_in		11	I									0
		pr1_pru1_gpi0		12	I									
		pr1_pru1_gpo0		13	O									
		gpio4_4		14	IO									
		Driver off		15	I									
D2	vin2a_d4	vin2a_d4		0	I	PD	PD	15	1.8/3.3	vddshv1	Yes	Dual Voltage LVCMOS	PU/PD	0
		vout2_d19	No	4	O									
		emu14		5	O									
		uart10_ctsn		8	I									1
		kbd_col1		9	O									
		ehrpwm1_synco		10	O									
		pr1_edc_sync0_out		11	O									
		pr1_pru1_gpi1		12	I									
		pr1_pru1_gpo1		13	O									
		gpio4_5		14	IO									
		Driver off		15	I									

Copyright © 2015–2019, Texas Instruments Incorporated

表 4-2. Ball Characteristics[(1)] (continued)

BALL NUMBER [1]	BALL NAME [2]	SIGNAL NAME [3]	PN [4]	MUXMODE [5]	TYPE [6]	BALL RESET STATE [7]	BALL RESET REL. STATE [8]	BALL RESET REL. MUXMODE [9]	I/O VOLTAGE VALUE [10]	POWER [11]	HYS [12]	BUFFER TYPE [13]	PULL UP/DOWN TYPE [14]	DSIS [15]
F4	vin2a_d5	vin2a_d5		0	I	PD	PD	15	1.8/3.3	vddshv1	Yes	Dual Voltage LVCMOS	PU/PD	0
		vout2_d18	No	4	O									
		emu15		5	O									
		uart10_rtsn		8	O									
		kbd_col2		9	O									
		eQEP2A_in		10	I									0
		pr1_edio_sof		11	O									
		pr1_pru1_gpi2		12	I									
		pr1_pru1_gpo2		13	O									
		gpio4_6		14	IO									
		Driver off		15	I									
C1	vin2a_d6	vin2a_d6		0	I	PD	PD	15	1.8/3.3	vddshv1	Yes	Dual Voltage LVCMOS	PU/PD	0
		vout2_d17	No	4	O									
		emu16		5	O									
		mii1_rxd1		8	I									0
		kbd_col3		9	O									
		eQEP2B_in		10	I									0
		pr1_mii_mt1_clk		11	I									0
		pr1_pru1_gpi3		12	I									
		pr1_pru1_gpo3		13	O									
		gpio4_7		14	IO									
		Driver off		15	I									
E4	vin2a_d7	vin2a_d7		0	I	PD	PD	15	1.8/3.3	vddshv1	Yes	Dual Voltage LVCMOS	PU/PD	0
		vout2_d16	No	4	O									
		emu17		5	O									
		mii1_rxd2		8	I									0
		kbd_col4		9	O									
		eQEP2_index		10	IO									0
		pr1_mii1_txen		11	O									
		pr1_pru1_gpi4		12	I									
		pr1_pru1_gpo4		13	O									
		gpio4_8		14	IO									
		Driver off		15	I									

表 4-2. Ball Characteristics[(1)] (continued)

BALL NUMBER [1]	BALL NAME [2]	SIGNAL NAME [3]	PN [4]	MUXMODE [5]	TYPE [6]	BALL RESET STATE [7]	BALL RESET REL. STATE [8]	BALL RESET REL. MUXMODE [9]	I/O VOLTAGE VALUE [10]	POWER [11]	HYS [12]	BUFFER TYPE [13]	PULL UP/DOWN TYPE [14]	DSIS [15]
F5	vin2a_d8	vin2a_d8		0	I	PD	PD	15	1.8/3.3	vddshv1	Yes	Dual Voltage LVCMOS	PU/PD	0
		vout2_d15	No	4	O									
		emu18		5	O									
		mii1_rxd3		8	I									0
		kbd_col5		9	O									
		eQEP2_strobe		10	IO									0
		pr1_mii1_txd3		11	O									
		pr1_pru1_gpi5		12	I									
		pr1_pru1_gpo5		13	O									
		gpio4_9		14	IO									
		Driver off		15	I									
E6	vin2a_d9	vin2a_d9		0	I	PD	PD	15	1.8/3.3	vddshv1	Yes	Dual Voltage LVCMOS	PU/PD	0
		vout2_d14	No	4	O									
		emu19		5	O									
		mii1_rxd0		8	I									0
		kbd_col6		9	O									
		ehrpwm2A		10	O									
		pr1_mii1_txd2		11	O									
		pr1_pru1_gpi6		12	I									
		pr1_pru1_gpo6		13	O									
		gpio4_10		14	IO									
		Driver off		15	I									
G2	vin2a_de0	vin2a_de0		0	I	PD	PD	15	1.8/3.3	vddshv1	Yes	Dual Voltage LVCMOS	PU/PD	
		vin2a_fld0		1	I									
		vin2b_fld1		2	I									
		vin2b_de1		3	I									
		vout2_de	No	4	O									
		emu6		5	O									
		kbd_row1		9	I									0
		eQEP1B_in		10	I									0
		pr1_edio_data_in1		12	I									0
		pr1_edio_data_out1		13	O									
		gpio3_29		14	IO									
		Driver off		15	I									

Copyright © 2015–2019, Texas Instruments Incorporated

表 4-2. Ball Characteristics[(1)] (continued)

BALL NUMBER [1]	BALL NAME [2]	SIGNAL NAME [3]	PN [4]	MUXMODE [5]	TYPE [6]	BALL RESET STATE [7]	BALL RESET REL. STATE [8]	BALL RESET REL. MUXMODE [9]	I/O VOLTAGE VALUE [10]	POWER [11]	HYS [12]	BUFFER TYPE [13]	PULL UP/DOWN TYPE [14]	DSIS [15]
H7	vin2a_fld0	vin2a_fld0		0	I	PD	PD	15	1.8/3.3	vddshv1	Yes	Dual Voltage LVCMOS	PU/PD	
		vin2b_clk1		2	I									
		vout2_clk	No	4	O									
		emu7		5	O									
		eQEP1_index		10	IO									0
		pr1_edio_data_in2		12	I									0
		pr1_edio_data_out2		13	O									
		gpio3_30		14	IO									
		Driver off		15	I									
G1	vin2a_hsync0	vin2a_hsync0		0	I	PD	PD	15	1.8/3.3	vddshv1	Yes	Dual Voltage LVCMOS	PU/PD	
		vin2b_hsync1		3	I									
		vout2_hsync	No	4	O									
		emu8		5	O									
		uart9_rxd		7	I									1
		spi4_sclk		8	IO									0
		kbd_row2		9	I									0
		eQEP1_strobe		10	IO									0
		pr1_uart0_cts_n		11	I									1
		pr1_edio_data_in3		12	I									0
		pr1_edio_data_out3		13	O									
		gpio3_31		14	IO									
		Driver off		15	I									
G6	vin2a_vsync0	vin2a_vsync0		0	I	PD	PD	15	1.8/3.3	vddshv1	Yes	Dual Voltage LVCMOS	PU/PD	
		vin2b_vsync1		3	I									
		vout2_vsync	No	4	O									
		emu9		5	O									
		uart9_txd		7	O									
		spi4_d1		8	IO									0
		kbd_row3		9	I									0
		ehrpwm1A		10	O									
		pr1_uart0_rts_n		11	O									
		pr1_edio_data_in4		12	I									0
		pr1_edio_data_out4		13	O									
		gpio4_0		14	IO									
		Driver off		15	I									

Copyright © 2015–2019, Texas Instruments Incorporated

表 4-2. Ball Characteristics[(1)] (continued)

BALL NUMBER [1]	BALL NAME [2]	SIGNAL NAME [3]	PN [4]	MUXMODE [5]	TYPE [6]	BALL RESET STATE [7]	BALL RESET REL. STATE [8]	BALL RESET REL. MUXMODE [9]	I/O VOLTAGE VALUE [10]	POWER [11]	HYS [12]	BUFFER TYPE [13]	PULL UP/DOWN TYPE [14]	DSIS [15]
D11	vout1_clk	vout1_clk	No	0	O	PD	PD	15	1.8/3.3	vddshv2	Yes	Dual Voltage LVCMOS	PU/PD	
		vin4a_fld0		3	I									0
		vin3a_fld0		4	I									0
		spi3_cs0		8	IO									1
		gpio4_19		14	IO									
		Driver off		15	I									
F11	vout1_d0	vout1_d0	No	0	O	PD	PD	15	1.8/3.3	vddshv2	Yes	Dual Voltage LVCMOS	PU/PD	
		uart5_rxd		2	I									1
		vin4a_d16		3	I									0
		vin3a_d16		4	I									0
		spi3_cs2		8	IO									1
		pr1_uart0_cts_n		10	I									1
		pr2_pru1_gpi18		12	I									
		pr2_pru1_gpo18		13	O									
		gpio8_0		14	IO									
		Driver off		15	I									
G10	vout1_d1	vout1_d1	No	0	O	PD	PD	15	1.8/3.3	vddshv2	Yes	Dual Voltage LVCMOS	PU/PD	
		uart5_txd		2	O									
		vin4a_d17		3	I									0
		vin3a_d17		4	I									0
		pr1_uart0_rts_n		10	O									
		pr2_pru1_gpi19		12	I									
		pr2_pru1_gpo19		13	O									
		gpio8_1		14	IO									
		Driver off		15	I									
D7	vout1_d10	vout1_d10	No	0	O	PD	PD	15	1.8/3.3	vddshv2	Yes	Dual Voltage LVCMOS	PU/PD	
		emu3		2	O									
		vin4a_d10		3	I									0
		vin3a_d10		4	I									0
		obs5		5	O									
		obs21		6	O									
		obs_irq2		7	O									
		pr2_edio_sof		10	O									
		pr2_pru0_gpi7		12	I									
		pr2_pru0_gpo7		13	O									
		gpio8_10		14	IO									
		Driver off		15	I									

Copyright © 2015–2019, Texas Instruments Incorporated

表 4-2. Ball Characteristics[(1)] (continued)

BALL NUMBER [1]	BALL NAME [2]	SIGNAL NAME [3]	PN [4]	MUXMODE [5]	TYPE [6]	BALL RESET STATE [7]	BALL RESET REL. STATE [8]	BALL RESET REL. MUXMODE [9]	I/O VOLTAGE VALUE [10]	POWER [11]	HYS [12]	BUFFER TYPE [13]	PULL UP/DOWN TYPE [14]	DSIS [15]
D8	vout1_d11	vout1_d11	No	0	O	PD	PD	15	1.8/3.3	vddshv2	Yes	Dual Voltage LVCMOS	PU/PD	
		emu10		2	O									
		vin4a_d11		3	I									0
		vin3a_d11		4	I									0
		obs6		5	O									
		obs22		6	O									
		obs_dmarq2		7	O									
		pr2_uart0_cts_n		10	I									1
		pr2_pru0_gpi8		12	I									
		pr2_pru0_gpo8		13	O									
		gpio8_11		14	IO									
		Driver off		15	I									
A5	vout1_d12	vout1_d12	No	0	O	PD	PD	15	1.8/3.3	vddshv2	Yes	Dual Voltage LVCMOS	PU/PD	
		emu11		2	O									
		vin4a_d12		3	I									0
		vin3a_d12		4	I									0
		obs7		5	O									
		obs23		6	O									
		pr2_uart0_rts_n		10	O									
		pr2_pru0_gpi9		12	I									
		pr2_pru0_gpo9		13	O									
		gpio8_12		14	IO									
		Driver off		15	I									
C6	vout1_d13	vout1_d13	No	0	O	PD	PD	15	1.8/3.3	vddshv2	Yes	Dual Voltage LVCMOS	PU/PD	
		emu12		2	O									
		vin4a_d13		3	I									0
		vin3a_d13		4	I									0
		obs8		5	O									
		obs24		6	O									
		pr2_uart0_rxd		10	I									1
		pr2_pru0_gpi10		12	I									
		pr2_pru0_gpo10		13	O									
		gpio8_13		14	IO									
		Driver off		15	I									

Copyright © 2015–2019, Texas Instruments Incorporated

表 4-2. Ball Characteristics[(1)] (continued)

BALL NUMBER [1]	BALL NAME [2]	SIGNAL NAME [3]	PN [4]	MUXMODE [5]	TYPE [6]	BALL RESET STATE [7]	BALL RESET REL. STATE [8]	BALL RESET REL. MUXMODE [9]	I/O VOLTAGE VALUE [10]	POWER [11]	HYS [12]	BUFFER TYPE [13]	PULL UP/DOWN TYPE [14]	DSIS [15]
C8	vout1_d14	vout1_d14	No	0	O	PD	PD	15	1.8/3.3	vddshv2	Yes	Dual Voltage LVCMOS	PU/PD	
		emu13		2	O									
		vin4a_d14		3	I									0
		vin3a_d14		4	I									0
		obs9		5	O									
		obs25		6	O									
		pr2_uart0_txd		10	O									
		pr2_pru0_gpi11		12	I									
		pr2_pru0_gpo11		13	O									
		gpio8_14		14	IO									
		Driver off		15	I									
C7	vout1_d15	vout1_d15	No	0	O	PD	PD	15	1.8/3.3	vddshv2	Yes	Dual Voltage LVCMOS	PU/PD	
		emu14		2	O									
		vin4a_d15		3	I									0
		vin3a_d15		4	I									0
		obs10		5	O									
		obs26		6	O									
		pr2_ecap0_ecap_capin_apwm_o		10	IO									0
		pr2_pru0_gpi12		12	I									
		pr2_pru0_gpo12		13	O									
		gpio8_15		14	IO									
		Driver off		15	I									
B7	vout1_d16	vout1_d16	No	0	O	PD	PD	15	1.8/3.3	vddshv2	Yes	Dual Voltage LVCMOS	PU/PD	
		uart7_rxd		2	I									1
		vin4a_d0		3	I									0
		vin3a_d0		4	I									0
		pr2_edio_data_in0		10	I									0
		pr2_edio_data_out0		11	O									
		pr2_pru0_gpi13		12	I									
		pr2_pru0_gpo13		13	O									
		gpio8_16		14	IO									
		Driver off		15	I									

Copyright © 2015–2019, Texas Instruments Incorporated

表 4-2. Ball Characteristics[(1)] (continued)

BALL NUMBER [1]	BALL NAME [2]	SIGNAL NAME [3]	PN [4]	MUXMODE [5]	TYPE [6]	BALL RESET STATE [7]	BALL RESET REL. STATE [8]	BALL RESET REL. MUXMODE [9]	I/O VOLTAGE VALUE [10]	POWER [11]	HYS [12]	BUFFER TYPE [13]	PULL UP/DOWN TYPE [14]	DSIS [15]
B8	vout1_d17	vout1_d17	No	0	O	PD	PD	15	1.8/3.3	vddshv2	Yes	Dual Voltage LVCMOS	PU/PD	
		uart7_txd		2	O									
		vin4a_d1		3	I									0
		vin3a_d1		4	I									0
		pr2_edio_data_in1		10	I									0
		pr2_edio_data_out1		11	O									
		pr2_pru0_gpi14		12	I									
		pr2_pru0_gpo14		13	O									
		gpio8_17		14	IO									
		Driver off		15	I									
A7	vout1_d18	vout1_d18	No	0	O	PD	PD	15	1.8/3.3	vddshv2	Yes	Dual Voltage LVCMOS	PU/PD	
		emu4		2	O									
		vin4a_d2		3	I									0
		vin3a_d2		4	I									0
		obs11		5	O									
		obs27		6	O									
		pr2_edio_data_in2		10	I									0
		pr2_edio_data_out2		11	O									
		pr2_pru0_gpi15		12	I									
		pr2_pru0_gpo15		13	O									
		gpio8_18		14	IO									
		Driver off		15	I									
A8	vout1_d19	vout1_d19	No	0	O	PD	PD	15	1.8/3.3	vddshv2	Yes	Dual Voltage LVCMOS	PU/PD	
		emu15		2	O									
		vin4a_d3		3	I									0
		vin3a_d3		4	I									0
		obs12		5	O									
		obs28		6	O									
		pr2_edio_data_in3		10	I									0
		pr2_edio_data_out3		11	O									
		pr2_pru0_gpi16		12	I									
		pr2_pru0_gpo16		13	O									
		gpio8_19		14	IO									
		Driver off		15	I									

表 4-2. Ball Characteristics[(1)] (continued)

BALL NUMBER [1]	BALL NAME [2]	SIGNAL NAME [3]	PN [4]	MUXMODE [5]	TYPE [6]	BALL RESET STATE [7]	BALL RESET REL. STATE [8]	BALL RESET REL. MUXMODE [9]	I/O VOLTAGE VALUE [10]	POWER [11]	HYS [12]	BUFFER TYPE [13]	PULL UP/DOWN TYPE [14]	DSIS [15]
F10	vout1_d2	vout1_d2	No	0	O	PD	PD	15	1.8/3.3	vddshv2	Yes	Dual Voltage LVCMOS	PU/PD	
		emu2		2	O									
		vin4a_d18		3	I									0
		vin3a_d18		4	I									0
		obs0		5	O									
		obs16		6	O									
		obs_irq1		7	O									
		pr1_uart0_rxd		10	I									1
		pr2_pru1_gpi20		12	I									
		pr2_pru1_gpo20		13	O									
		gpio8_2		14	IO									
		Driver off		15	I									
C9	vout1_d20	vout1_d20	No	0	O	PD	PD	15	1.8/3.3	vddshv2	Yes	Dual Voltage LVCMOS	PU/PD	
		emu16		2	O									
		vin4a_d4		3	I									0
		vin3a_d4		4	I									0
		obs13		5	O									
		obs29		6	O									
		pr2_edio_data_in4		10	I									0
		pr2_edio_data_out4		11	O									
		pr2_pru0_gpi17		12	I									
		pr2_pru0_gpo17		13	O									
		gpio8_20		14	IO									
		Driver off		15	I									
A9	vout1_d21	vout1_d21	No	0	O	PD	PD	15	1.8/3.3	vddshv2	Yes	Dual Voltage LVCMOS	PU/PD	
		emu17		2	O									
		vin4a_d5		3	I									0
		vin3a_d5		4	I									0
		obs14		5	O									
		obs30		6	O									
		pr2_edio_data_in5		10	I									0
		pr2_edio_data_out5		11	O									
		pr2_pru0_gpi18		12	I									
		pr2_pru0_gpo18		13	O									
		gpio8_21		14	IO									
		Driver off		15	I									

Copyright © 2015–2019, Texas Instruments Incorporated

表 4-2. Ball Characteristics[(1)] (continued)

BALL NUMBER [1]	BALL NAME [2]	SIGNAL NAME [3]	PN [4]	MUXMODE [5]	TYPE [6]	BALL RESET STATE [7]	BALL RESET REL. STATE [8]	BALL RESET REL. MUXMODE [9]	I/O VOLTAGE VALUE [10]	POWER [11]	HYS [12]	BUFFER TYPE [13]	PULL UP/DOWN TYPE [14]	DSIS [15]
B9	vout1_d22	vout1_d22	No	0	O	PD	PD	15	1.8/3.3	vddshv2	Yes	Dual Voltage LVCMOS	PU/PD	
		emu18		2	O									
		vin4a_d6		3	I									0
		vin3a_d6		4	I									0
		obs15		5	O									
		obs31		6	O									
		pr2_edio_data_in6		10	I									0
		pr2_edio_data_out6		11	O									
		pr2_pru0_gpi19		12	I									
		pr2_pru0_gpo19		13	O									
		gpio8_22		14	IO									
		Driver off		15	I									
A10	vout1_d23	vout1_d23	No	0	O	PD	PD	15	1.8/3.3	vddshv2	Yes	Dual Voltage LVCMOS	PU/PD	
		emu19		2	O									
		vin4a_d7		3	I									0
		vin3a_d7		4	I									0
		spi3_cs3		8	IO									1
		pr2_edio_data_in7		10	I									0
		pr2_edio_data_out7		11	O									
		pr2_pru0_gpi20		12	I									
		pr2_pru0_gpo20		13	O									
		gpio8_23		14	IO									
		Driver off		15	I									
G11	vout1_d3	vout1_d3	No	0	O	PD	PD	15	1.8/3.3	vddshv2	Yes	Dual Voltage LVCMOS	PU/PD	
		emu5		2	O									
		vin4a_d19		3	I									0
		vin3a_d19		4	I									0
		obs1		5	O									
		obs17		6	O									
		obs_dmarq1		7	O									
		pr1_uart0_txd		10	O									
		pr2_pru0_gpi0		12	I									
		pr2_pru0_gpo0		13	O									
		gpio8_3		14	IO									
		Driver off		15	I									

Copyright © 2015–2019, Texas Instruments Incorporated

表 4-2. Ball Characteristics[(1)] (continued)

BALL NUMBER [1]	BALL NAME [2]	SIGNAL NAME [3]	PN [4]	MUXMODE [5]	TYPE [6]	BALL RESET STATE [7]	BALL RESET REL. STATE [8]	BALL RESET REL. MUXMODE [9]	I/O VOLTAGE VALUE [10]	POWER [11]	HYS [12]	BUFFER TYPE [13]	PULL UP/DOWN TYPE [14]	DSIS [15]
E9	vout1_d4	vout1_d4	No	0	O	PD	PD	15	1.8/3.3	vddshv2	Yes	Dual Voltage LVCMOS	PU/PD	
		emu6		2	O									
		vin4a_d20		3	I									0
		vin3a_d20		4	I									0
		obs2		5	O									
		obs18		6	O									
		pr1_ecap0_ecap_capin_apwm_o		10	IO									0
		pr2_pru0_gpi1		12	I									
		pr2_pru0_gpo1		13	O									
		gpio8_4		14	IO									
		Driver off		15	I									
F9	vout1_d5	vout1_d5	No	0	O	PD	PD	15	1.8/3.3	vddshv2	Yes	Dual Voltage LVCMOS	PU/PD	
		emu7		2	O									
		vin4a_d21		3	I									0
		vin3a_d21		4	I									0
		obs3		5	O									
		obs19		6	O									
		pr2_edc_latch0_in		10	I									0
		pr2_pru0_gpi2		12	I									
		pr2_pru0_gpo2		13	O									
		gpio8_5		14	IO									
		Driver off		15	I									
F8	vout1_d6	vout1_d6	No	0	O	PD	PD	15	1.8/3.3	vddshv2	Yes	Dual Voltage LVCMOS	PU/PD	
		emu8		2	O									
		vin4a_d22		3	I									0
		vin3a_d22		4	I									0
		obs4		5	O									
		obs20		6	O									
		pr2_edc_latch1_in		10	I									0
		pr2_pru0_gpi3		12	I									
		pr2_pru0_gpo3		13	O									
		gpio8_6		14	IO									
		Driver off		15	I									

Copyright © 2015–2019, Texas Instruments Incorporated

表 4-2. Ball Characteristics[(1)] (continued)

BALL NUMBER [1]	BALL NAME [2]	SIGNAL NAME [3]	PN [4]	MUXMODE [5]	TYPE [6]	BALL RESET STATE [7]	BALL RESET REL. STATE [8]	BALL RESET REL. MUXMODE [9]	I/O VOLTAGE VALUE [10]	POWER [11]	HYS [12]	BUFFER TYPE [13]	PULL UP/DOWN TYPE [14]	DSIS [15]
E7	vout1_d7	vout1_d7	No	0	O	PD	PD	15	1.8/3.3	vddshv2	Yes	Dual Voltage LVCMOS	PU/PD	
		emu9		2	O									
		vin4a_d23		3	I									0
		vin3a_d23		4	I									0
		pr2_edc_sync0_out		10	O									
		pr2_pru0_gpi4		12	I									
		pr2_pru0_gpo4		13	O									
		gpio8_7		14	IO									
		Driver off		15	I									
E8	vout1_d8	vout1_d8	No	0	O	PD	PD	15	1.8/3.3	vddshv2	Yes	Dual Voltage LVCMOS	PU/PD	
		uart6_rxd		2	I									1
		vin4a_d8		3	I									0
		vin3a_d8		4	I									0
		pr2_edc_sync1_out		10	O									
		pr2_pru0_gpi5		12	I									
		pr2_pru0_gpo5		13	O									
		gpio8_8		14	IO									
		Driver off		15	I									
D9	vout1_d9	vout1_d9	No	0	O	PD	PD	15	1.8/3.3	vddshv2	Yes	Dual Voltage LVCMOS	PU/PD	
		uart6_txd		2	O									
		vin4a_d9		3	I									0
		vin3a_d9		4	I									0
		pr2_edio_latch_in		10	I									0
		pr2_pru0_gpi6		12	I									
		pr2_pru0_gpo6		13	O									
		gpio8_9		14	IO									
		Driver off		15	I									
B10	vout1_de	vout1_de	No	0	O	PD	PD	15	1.8/3.3	vddshv2	Yes	Dual Voltage LVCMOS	PU/PD	
		vin4a_de0		3	I									0
		vin3a_de0		4	I									0
		spi3_d1		8	IO									0
		gpio4_20		14	IO									
		Driver off		15	I									

Copyright © 2015–2019, Texas Instruments Incorporated

表 4-2. Ball Characteristics[(1)] (continued)

BALL NUMBER [1]	BALL NAME [2]	SIGNAL NAME [3]	PN [4]	MUXMODE [5]	TYPE [6]	BALL RESET STATE [7]	BALL RESET REL. STATE [8]	BALL RESET REL. MUXMODE [9]	I/O VOLTAGE VALUE [10]	POWER [11]	HYS [12]	BUFFER TYPE [13]	PULL UP/DOWN TYPE [14]	DSIS [15]
B11	vout1_fld	vout1_fld	No	0	O	PD	PD	15	1.8/3.3	vddshv2	Yes	Dual Voltage LVCMOS	PU/PD	
		vin4a_clk0		3	I									0
		vin3a_clk0		4	I									0
		spi3_cs1		8	IO									1
		gpio4_21		14	IO									
		Driver off		15	I									
C11	vout1_hsync	vout1_hsync	No	0	O	PD	PD	15	1.8/3.3	vddshv2	Yes	Dual Voltage LVCMOS	PU/PD	
		vin4a_hsync0		3	I									0
		vin3a_hsync0		4	I									0
		spi3_d0		8	IO									0
		gpio4_22		14	IO									
		Driver off		15	I									
E11	vout1_vsync	vout1_vsync	No	0	O	PD	PD	15	1.8/3.3	vddshv2	Yes	Dual Voltage LVCMOS	PU/PD	
		vin4a_vsync0		3	I									0
		vin3a_vsync0		4	I									0
		spi3_sclk		8	IO									0
		pr2_pru1_gpi17		12	I									
		pr2_pru1_gpo17		13	O									
		gpio4_23		14	IO									
		Driver off		15	I									
A1, A14, A2, A23, A28, A6, AA10, AA14, AA15, AA20, AA8, AA9, AB14, AB20, AD1, AD24, AG1, AH1, AH2, AH20, AH28, AH8, B1, D13, D19, E13, E19, F1, F7, G7, G8, G9, H12, J12, J15, J28, K1, K15, K24, K25, K4, K5, L13, L14, M19, N14, N15, N19, N24, N25, P28, R1, R12, R13, R15, R21, T10, T11, T12, T14, T15, T17, T18, T21, U15, U17, U20, U21, V15, V17, W1, W15, W24, W25, W28	vss	vss			GND									
AD19, AE19	vssa_hdmi	vssa_hdmi			GND									
AF15	vssa_osc0	vssa_osc0			GND									

Copyright © 2015–2019, Texas Instruments Incorporated

表 4-2. Ball Characteristics[(1)] (continued)

BALL NUMBER [1]	BALL NAME [2]	SIGNAL NAME [3]	PN [4]	MUXMODE [5]	TYPE [6]	BALL RESET STATE [7]	BALL RESET REL. STATE [8]	BALL RESET REL. MUXMODE [9]	I/O VOLTAGE VALUE [10]	POWER [11]	HYS [12]	BUFFER TYPE [13]	PULL UP/DOWN TYPE [14]	DSIS [15]
AC14	vssa_osc1	vssa_osc1			GND									
AD13, AE13	vssa_pcie	vssa_pcie			GND									
AE10	vssa_sata	vssa_sata			GND									
AA11, AB11	vssa_usb	vssa_usb			GND									
AD10	vssa_usb3	vssa_usb3			GND									
U14	vssa_video	vssa_video			GND									
AD17	Wakeup0	Wakeup0		0	I	OFF	OFF	15	1.8/3.3	vddshv5	Yes	IHHV1833	PU/PD	
		dcan1_rx		1	I									1
		gpio1_0		14	I									
		Driver off		15	I									
AC17	Wakeup1	Wakeup1		0	I	OFF	OFF	15	1.8/3.3	vddshv5	Yes	IHHV1833	PU/PD	
		dcan2_rx		1	I									1
		gpio1_1		14	I									
		Driver off		15	I									
AB16	Wakeup2	Wakeup2		0	I	OFF	OFF	15	1.8/3.3	vddshv5	Yes	IHHV1833	PU/PD	
		sys_nirq2		1	I									
		gpio1_2		14	I									
		Driver off		15	I									
AC16	Wakeup3	Wakeup3		0	I	OFF	OFF	15	1.8/3.3	vddshv5	Yes	IHHV1833	PU/PD	
		sys_nirq1		1	I									
		gpio1_3		14	I									
		Driver off		15	I									
AE15	xi_osc0	xi_osc0		0	I				1.8	vdda_osc	No	LVCMOS Analog		
AC15	xi_osc1	xi_osc1		0	I				1.8	vdda_osc	No	LVCMOS Analog		
AD15	xo_osc0	xo_osc0		0	O				1.8	vdda_osc	No	LVCMOS Analog		
AC13	xo_osc1	xo_osc1		0	A				1.8	vdda_osc	No	LVCMOS Analog		

表 4-2. Ball Characteristics[(1)] (continued)

BALL NUMBER [1]	BALL NAME [2]	SIGNAL NAME [3]	PN [4]	MUXMODE [5]	TYPE [6]	BALL RESET STATE [7]	BALL RESET REL. STATE [8]	BALL RESET REL. MUXMODE [9]	I/O VOLTAGE VALUE [10]	POWER [11]	HYS [12]	BUFFER TYPE [13]	PULL UP/DOWN TYPE [14]	DSIS [15]
D18	xref_clk0	xref_clk0		0	I	PD	PD	15	1.8/3.3	vddshv3	Yes	Dual Voltage LVCMOS	PU/PD	
		mcasp2_axr8		1	IO									0
		mcasp1_axr4		2	IO									0
		mcasp1_ahclkx		3	O									
		mcasp5_ahclkx		4	O									
		vin6a_d0		7	I									0
		hdq0		8	IO									1
		clkout2		9	O									
		timer13		10	IO									
		pr2_mii1_col		11	I									0
		pr2_pru1_gpi5		12	I									
		pr2_pru1_gpo5		13	O									
		gpio6_17		14	IO									
		Driver off		15	I									
E17	xref_clk1	xref_clk1		0	I	PD	PD	15	1.8/3.3	vddshv3	Yes	Dual Voltage LVCMOS	PU/PD	
		mcasp2_axr9		1	IO									0
		mcasp1_axr5		2	IO									0
		mcasp2_ahclkx		3	O									
		mcasp6_ahclkx		4	O									
		vin6a_clk0		7	I									0
		timer14		10	IO									
		pr2_mii1_crs		11	I									0
		pr2_pru1_gpi6		12	I									
		pr2_pru1_gpo6		13	O									
		gpio6_18		14	IO									
		Driver off		15	I									
B26	xref_clk2	xref_clk2		0	I	PD	PD	15	1.8/3.3	vddshv3	Yes	Dual Voltage LVCMOS	PU/PD	
		mcasp2_axr10		1	IO									0
		mcasp1_axr6		2	IO									0
		mcasp3_ahclkx		3	O									
		mcasp7_ahclkx		4	O									
		vout2_clk	No	6	O									
		vin4a_clk0		8	I									0
		timer15		10	IO									
		gpio6_19		14	IO									
		Driver off		15	I									

Copyright © 2015–2019, Texas Instruments Incorporated

表 4-2. Ball Characteristics[(1)] (continued)

BALL NUMBER [1]	BALL NAME [2]	SIGNAL NAME [3]	PN [4]	MUXMODE [5]	TYPE [6]	BALL RESET STATE [7]	BALL RESET REL. STATE [8]	BALL RESET REL. MUXMODE [9]	I/O VOLTAGE VALUE [10]	POWER [11]	HYS [12]	BUFFER TYPE [13]	PULL UP/DOWN TYPE [14]	DSIS [15]
C23	xref_clk3	xref_clk3		0	I	PD	PD	15	1.8/3.3	vddshv3	Yes	Dual Voltage LVCMOS	PU/PD	
		mcasp2_axr11		1	IO									0
		mcasp1_axr7		2	IO									0
		mcasp4_ahclkx		3	O									
		mcasp8_ahclkx		4	O									
		vout2_de	No	6	O									
		hdq0		7	IO									1
		vin4a_de0		8	I									0
		clkout3		9	O									
		timer16		10	IO									
		gpio6_20		14	IO									
		Driver off		15	I									

(1) NA in this table stands for Not Applicable.

(2) For more information on recommended operating conditions, see 表 5-4, *Recommended Operating Conditions*.

(3) The pullup or pulldown block strength is equal to: minimum = 50 μA, typical = 100 μA, maximum = 250 μA.

(4) The output impedance settings of this IO cell are programmable; by default, the value is DS[1:0] = 10, this means 40 Ω. For more information on DS[1:0] register configuration, see the Device TRM.

(5) IO drive strength for usb1_dp, usb1_dm, usb2_dp and usb2_dm: minimum 18.3 mA, maximum 89 mA (for a power supply vdda33v_usb1 and vdda33v_usb2 = 3.46 V).

(6) Minimum PU = 900 Ω, maximum PU = 3.090 kΩ and minimum PD = 14.25 kΩ, maximum PD = 24.8 kΩ.

For more information, see chapter 7 of the USB2.0 specification, in particular section Signaling / Device Speed Identification.

(7) In PUx / PDy, x and y = 60 to 200 μA.

The output impedance settings (or drive strengths) of this IO are programmable (34 Ω, 40 Ω, 48 Ω, 60 Ω, 80 Ω) depending on the values of the I[2:0] registers.

(8) The VOUT3 interface when multiplexed onto balls mapped to the VDDSHV6 supply rail is restricted to operating in 1.8V mode only (VDDSHV6 must be supplied with 1.8V). 3.3V mode is not supported. This must be considered in the pin mux programming and VDDSHVx supply connections.

(9) The internal pull resistors for balls K7, M7, J5, K6, J4, J6, H4, H5 are permanently disabled when sysboot15 is set to 1 as described in the section *Sysboot Configuration* of the Device TRM. If internal pull-up/down resistors are desired on these balls then sysboot15 should be set to 0. If gpmc boot mode is used with SYSBOOT15=1 (not recommended) then external pull-downs should be implemented to keep the address bus at logic-0 value during boot since the gpmc ms-address bits are high-z during boot.

4.3 Multiplexing Characteristics

表 4-3 describes the device multiplexing (no characteristics are available in this table).

注: This table doesn't take into account subsystem multiplexing signals. Subsystem multiplexing signals are described in 4.4, *Signal Descriptions*.

注: For more information, see the Control Module / Control Module Functional Description / PAD Functional Multiplexing and Configuration section of the Device TRM.

注: Configuring two pins to the same input signal is not supported as it can yield unexpected results. This can be easily prevented with the proper software configuration (Hi-Z mode is not an input signal).

注: When a pad is set into a multiplexing mode which is not defined by pin multiplexing, that pad's behavior is undefined. This should be avoided.

注意

The I/O timings provided in 7, *Timing Requirements and Switching Characteristics* are valid only if signals within a single IOSET are used. The IOSETs are defined in the corresponding tables.

表 4-3. Multiplexing Characteristics

ADDRESS	REGISTER NAME	BALL NUMBER	MUXMODE FIELD SETTINGS (CTRL_CORE_PAD_*[3:0])															
			0	1	2	3	4	5	6	7	8	9	10	11	12	13	14	15
		P25	ddr2_a6															
		Y23	ddr1_d26															
		Y19	ddr1_d21															
		AE15	xi_osc0															
		AH24	ddr1_nck															
		AG15	ljcb_clkp															
		AF24	ddr1_d4															
		U25	ddr2_wen															
		F27	ddr2_d5															
		V25	ddr1_ecc_d6															
		M27	ddr2_dqsn3															
		G26	ddr2_d12															
		AG19	hdmi1_data2x															
		AF21	ddr1_a4															
		E27	ddr2_d6															
		F24	ddr2_d3															

Copyright © 2015–2019, Texas Instruments Incorporated

表 4-3. Multiplexing Characteristics (continued)

ADDRESS	REGISTER NAME	BALL NUMBER	MUXMODE FIELD SETTINGS (CTRL_CORE_PAD_*[3:0])															
			0	1	2	3	4	5	6	7	8	9	10	11	12	13	14	15
		H26	ddr2_d11															
		W23	ddr1_ecc_d3															
		Y27	ddr1_dqsn3															
		AC24	ddr1_d14															
		J24	ddr2_d15															
		R26	ddr2_a1															
		G27	ddr2_dqsn0															
		AF28	ddr1_d11															
		AA23	ddr1_d24															
		AD18	ddr1_a15															
		H23	ddr2_d8															
		AH16	hdmi1_clocky															
		AC20	ddr1_a2															
		AA24	ddr1_d27															
		W19	ddr1_ecc_d2															
		L24	ddr2_d20															
		AG11	pcie_rxn1															
		AG21	ddr1_rst															
		AE28	ddr1_dqsn1															
		AC11	usb_txn0															
		L22	ddr2_d16															
		U28	ddr2_casn															
		K22	ddr2_d22															
		AG25	ddr1_dqsn0															
		W20	ddr1_d17															
		AF14	rtc_iso															
		AA27	ddr1_dqm3															
		AF25	ddr1_d0															
		AF23	ddr1_d6															
		AG18	hdmi1_data1x															
		AG10	sata1_txn0															
		AF20	ddr1_rasn															
		V26	ddr1_dqm_ecc															
		V20	ddr1_d16															
		G25	ddr2_d1															

表 4-3. Multiplexing Characteristics (continued)

ADDRESS	REGISTER NAME	BALL NUMBER	MUXMODE FIELD SETTINGS (CTRL_CORE_PAD_*[3:0])															
			0	1	2	3	4	5	6	7	8	9	10	11	12	13	14	15
		AH13	pcie_rxp0															
		AC18	ddr1_casn															
		AG9	sata1_rxp0															
		AH23	ddr1_csn0															
		AE11	usb2_dp															
		R25	ddr2_a0															
		Y24	ddr1_d28															
		AH15	ljcb_clkn															
		AD20	ddr1_a0															
		AA25	ddr1_d30															
		L23	ddr2_d19															
		AA1	mlbp_dat_p															
		AD14	rtc_osc_xo															
		J25	ddr2_d13															
		AC25	ddr1_d13															
		AB23	ddr1_dqm1															
		U22	ddr2_a15															
		T22	ddr2_a13															
		AH19	hdmi1_data 2y															
		M26	ddr2_d31															
		AB27	ddr1_d22															
		AG14	pcie_txn0															
		Y28	ddr1_dqs3															
		J20	ddr2_d23															
		AB19	ddr1_a3															
		AH10	sata1_txp0															
		G28	ddr2_dqs0															
		AG24	ddr1_ck															
		AE24	ddr1_d5															
		AC15	xi_osc1															
		AC21	ddr1_a12															
		K28	ddr2_dqsn2															
		AB1	mlbp_clk_p															
		AF12	usb_rxn0															
		L28	ddr2_d27															
		M24	ddr2_d29															
		AH9	sata1_rxn0															
		AC26	ddr1_dqm2															

Copyright © 2015–2019, Texas Instruments Incorporated

表 4-3. Multiplexing Characteristics (continued)

ADDRESS	REGISTER NAME	BALL NUMBER	MUXMODE FIELD SETTINGS (CTRL_CORE_PAD_*[3:0])															
			0	1	2	3	4	5	6	7	8	9	10	11	12	13	14	15
		AA28	ddr1_d31															
		H28	ddr2_dqsn1															
		AD23	ddr1_dqm0															
		E26	ddr2_d0															
		AE27	ddr1_dqs1															
		AF27	ddr1_d9															
		V24	ddr1_ecc_d5															
		K23	ddr2_dqm2															
		K20	ddr2_d17															
		T28	ddr2_ck															
		H24	ddr2_d10															
		AG27	ddr1_d10															
		R23	ddr2_odt0															
		U27	ddr2_ba1															
		AF22	ddr1_a8															
		AA2	mlbp_dat_n															
		U23	ddr2_ba0															
		AH21	ddr1_wen															
		AE21	ddr1_a7															
		AC12	usb1_dm															
		AH12	pcie_txp1															
		Y20	ddr1_d23															
		AC27	ddr1_d20															
		AE23	ddr1_d7															
		T27	ddr2_nck															
		AG22	ddr1_cke															
		AD27	ddr1_dqs2															
		AH14	pcie_txp0															
		AH26	ddr1_d3															
		AD21	ddr1_a10															
		N28	ddr2_a12															
		Y25	ddr1_ecc_d4															
		AE17	ddr1_a14															
		AH18	hdmi1_data1y															
		AH22	ddr1_a5															
		J26	ddr2_d14															

表 4-3. Multiplexing Characteristics (continued)

ADDRESS	REGISTER NAME	BALL NUMBER	MUXMODE FIELD SETTINGS (CTRL_CORE_PAD_*[3:0])															
			0	1	2	3	4	5	6	7	8	9	10	11	12	13	14	15
		W22	ddr1_ecc_d0															
		V23	ddr1_ecc_d1															
		AE12	usb_rxp0															
		AE14	rtc_osc_xi_clkin32															
		AH11	pcie_rxp1															
		AB2	mlbp_clk_n															
		AG23	ddr1_a6															
		H27	ddr2_dqs1															
		AB18	ddr1_ba2															
		AG17	hdmi1_data0x															
		AF26	ddr1_d1															
		H25	ddr2_d9															
		M25	ddr2_d30															
		AD11	usb_txp0															
		AC1	mlbp_sig_p															
		L27	ddr2_d24															
		V27	ddr1_dqs_ecc															
		AF17	ddr1_ba0															
		AE26	ddr1_d12															
		G24	ddr2_dqm1															
		K27	ddr2_dqs2															
		AC19	ddr1_a1															
		AG13	pcie_rxn0															
		L26	ddr2_d25															
		AB28	ddr1_d18															
		N23	ddr2_a10															
		M22	ddr2_dqm3															
		U26	ddr2_ba2															
		Y26	ddr1_ecc_d7															
		P24	ddr2_csn0															
		R22	ddr2_a14															
		AD22	ddr1_a11															
		N20	ddr2_a7															
		M23	ddr2_d28															
		AD28	ddr1_dqsn2															

Copyright © 2015–2019, Texas Instruments Incorporated

表 4-3. Multiplexing Characteristics (continued)

ADDRESS	REGISTER NAME	BALL NUMBER	MUXMODE FIELD SETTINGS (CTRL_CORE_PAD_*[3:0])															
			0	1	2	3	4	5	6	7	8	9	10	11	12	13	14	15
		U24	ddr2_cke															
		P22	ddr2_a5															
		AE18	ddr1_ba1															
		F26	ddr2_d4															
		AE20	ddr1_odt0															
		N22	ddr2_vref0															
		E28	ddr2_d7															
		F25	ddr2_d2															
		AF11	usb2_dm															
		R24	ddr2_rst															
		AD15	xo_osc0															
		R27	ddr2_a3															
		AE22	ddr1_a9															
		Y18	ddr1_vref0															
		AC13	xo_osc1															
		F28	ddr2_dqm0															
		J23	ddr2_d21															
		P26	ddr2_a11															
		M28	ddr2_dqs3															
		AC2	mlbp_sig_n															
		AD12	usb1_dp															
		Y22	ddr1_d25															
		T23	ddr2_rasn															
		AH17	hdmi1_data0y															
		N27	ddr2_a9															
		P23	ddr2_a4															
		AG26	ddr1_d2															
		AH25	ddr1_dqs0															
		AG12	pcie_txn1															
		AF18	ddr1_a13															
		K21	ddr2_d18															
		AC28	ddr1_d19															
		V28	ddr1_dqsn_ecc															
		P27	ddr2_a8															
		AC23	ddr1_d8															
		F22	porz															
		L25	ddr2_d26															

Copyright © 2015–2019, Texas Instruments Incorporated

表 4-3. Multiplexing Characteristics (continued)

ADDRESS	REGISTER NAME	BALL NUMBER	MUXMODE FIELD SETTINGS (CTRL_CORE_PAD_*[3:0])															
			0	1	2	3	4	5	6	7	8	9	10	11	12	13	14	15
		AG16	hdmi1_clockx															
		R28	ddr2_a2															
		AA26	ddr1_d29															
		AD25	ddr1_d15															
0x1400	CTRL_CORE_PAD_GPMC_AD0	M6	gpmc_ad0		vin3a_d0	vout3_d0											gpio1_6	sysboot0
0x1404	CTRL_CORE_PAD_GPMC_AD1	M2	gpmc_ad1		vin3a_d1	vout3_d1											gpio1_7	sysboot1
0x1408	CTRL_CORE_PAD_GPMC_AD2	L5	gpmc_ad2		vin3a_d2	vout3_d2											gpio1_8	sysboot2
0x140C	CTRL_CORE_PAD_GPMC_AD3	M1	gpmc_ad3		vin3a_d3	vout3_d3											gpio1_9	sysboot3
0x1410	CTRL_CORE_PAD_GPMC_AD4	L6	gpmc_ad4		vin3a_d4	vout3_d4											gpio1_10	sysboot4
0x1414	CTRL_CORE_PAD_GPMC_AD5	L4	gpmc_ad5		vin3a_d5	vout3_d5											gpio1_11	sysboot5
0x1418	CTRL_CORE_PAD_GPMC_AD6	L3	gpmc_ad6		vin3a_d6	vout3_d6											gpio1_12	sysboot6
0x141C	CTRL_CORE_PAD_GPMC_AD7	L2	gpmc_ad7		vin3a_d7	vout3_d7											gpio1_13	sysboot7
0x1420	CTRL_CORE_PAD_GPMC_AD8	L1	gpmc_ad8		vin3a_d8	vout3_d8											gpio7_18	sysboot8
0x1424	CTRL_CORE_PAD_GPMC_AD9	K2	gpmc_ad9		vin3a_d9	vout3_d9											gpio7_19	sysboot9
0x1428	CTRL_CORE_PAD_GPMC_AD10	J1	gpmc_ad10		vin3a_d10	vout3_d10											gpio7_28	sysboot10
0x142C	CTRL_CORE_PAD_GPMC_AD11	J2	gpmc_ad11		vin3a_d11	vout3_d11											gpio7_29	sysboot11
0x1430	CTRL_CORE_PAD_GPMC_AD12	H1	gpmc_ad12		vin3a_d12	vout3_d12											gpio1_18	sysboot12
0x1434	CTRL_CORE_PAD_GPMC_AD13	J3	gpmc_ad13		vin3a_d13	vout3_d13											gpio1_19	sysboot13
0x1438	CTRL_CORE_PAD_GPMC_AD14	H2	gpmc_ad14		vin3a_d14	vout3_d14											gpio1_20	sysboot14
0x143C	CTRL_CORE_PAD_GPMC_AD15	H3	gpmc_ad15		vin3a_d15	vout3_d15											gpio1_21	sysboot15
0x1440	CTRL_CORE_PAD_GPMC_A0	R6	gpmc_a0		vin3a_d16	vout3_d16	vin4a_d0		vin4b_d0	i2c4_scl	uart5_rxd						gpio7_3	Driver off
0x1444	CTRL_CORE_PAD_GPMC_A1	T9	gpmc_a1		vin3a_d17	vout3_d17	vin4a_d1		vin4b_d1	i2c4_sda	uart5_txd						gpio7_4	Driver off
0x1448	CTRL_CORE_PAD_GPMC_A2	T6	gpmc_a2		vin3a_d18	vout3_d18	vin4a_d2		vin4b_d2	uart7_rxd	uart5_ctsn						gpio7_5	Driver off
0x144C	CTRL_CORE_PAD_GPMC_A3	T7	gpmc_a3	qspi1_cs2	vin3a_d19	vout3_d19	vin4a_d3		vin4b_d3	uart7_txd	uart5_rtsn						gpio7_6	Driver off
0x1450	CTRL_CORE_PAD_GPMC_A4	P6	gpmc_a4	qspi1_cs3	vin3a_d20	vout3_d20	vin4a_d4		vin4b_d4	i2c5_scl	uart6_rxd						gpio1_26	Driver off

Copyright © 2015–2019, Texas Instruments Incorporated

表 4-3. Multiplexing Characteristics (continued)

ADDRESS	REGISTER NAME	BALL NUMBER	MUXMODE FIELD SETTINGS (CTRL_CORE_PAD_*[3:0])															
			0	1	2	3	4	5	6	7	8	9	10	11	12	13	14	15
0x1454	CTRL_CORE_PAD_GPMC_A5	R9	gpmc_a5		vin3a_d21	vout3_d21	vin4a_d5		vin4b_d5	i2c5_sda	uart6_txd						gpio1_27	Driver off
0x1458	CTRL_CORE_PAD_GPMC_A6	R5	gpmc_a6		vin3a_d22	vout3_d22	vin4a_d6		vin4b_d6	uart8_rxd	uart6_ctsn						gpio1_28	Driver off
0x145C	CTRL_CORE_PAD_GPMC_A7	P5	gpmc_a7		vin3a_d23	vout3_d23	vin4a_d7		vin4b_d7	uart8_txd	uart6_rtsn						gpio1_29	Driver off
0x1460	CTRL_CORE_PAD_GPMC_A8	N7	gpmc_a8		vin3a_hsync0	vout3_hsync			vin4b_hsync1	timer12	spi4_sclk						gpio1_30	Driver off
0x1464	CTRL_CORE_PAD_GPMC_A9	R4	gpmc_a9		vin3a_vsync0	vout3_vsync			vin4b_vsync1	timer11	spi4_d1						gpio1_31	Driver off
0x1468	CTRL_CORE_PAD_GPMC_A10	N9	gpmc_a10		vin3a_de0	vout3_de			vin4b_clk1	timer10	spi4_d0						gpio2_0	Driver off
0x146C	CTRL_CORE_PAD_GPMC_A11	P9	gpmc_a11		vin3a_fld0	vout3_fld	vin4a_fld0		vin4b_de1	timer9	spi4_cs0						gpio2_1	Driver off
0x1470	CTRL_CORE_PAD_GPMC_A12	P4	gpmc_a12				vin4a_clk0	gpmc_a0	vin4b_fld1	timer8	spi4_cs1	dma_evt1					gpio2_2	Driver off
0x1474	CTRL_CORE_PAD_GPMC_A13	R3	gpmc_a13	qspi1_rtclk			vin4a_hsync0			timer7	spi4_cs2	dma_evt2					gpio2_3	Driver off
0x1478	CTRL_CORE_PAD_GPMC_A14	T2	gpmc_a14	qspi1_d3			vin4a_vsync0			timer6	spi4_cs3						gpio2_4	Driver off
0x147C	CTRL_CORE_PAD_GPMC_A15	U2	gpmc_a15	qspi1_d2			vin4a_d8			timer5							gpio2_5	Driver off
0x1480	CTRL_CORE_PAD_GPMC_A16	U1	gpmc_a16	qspi1_d0			vin4a_d9										gpio2_6	Driver off
0x1484	CTRL_CORE_PAD_GPMC_A17	P3	gpmc_a17	qspi1_d1			vin4a_d10										gpio2_7	Driver off
0x1488	CTRL_CORE_PAD_GPMC_A18	R2	gpmc_a18	qspi1_sclk			vin4a_d11										gpio2_8	Driver off
0x148C	CTRL_CORE_PAD_GPMC_A19	K7	gpmc_a19	mmc2_dat4	gpmc_a13		vin4a_d12		vin3b_d0								gpio2_9	Driver off
0x1490	CTRL_CORE_PAD_GPMC_A20	M7	gpmc_a20	mmc2_dat5	gpmc_a14		vin4a_d13		vin3b_d1								gpio2_10	Driver off
0x1494	CTRL_CORE_PAD_GPMC_A21	J5	gpmc_a21	mmc2_dat6	gpmc_a15		vin4a_d14		vin3b_d2								gpio2_11	Driver off
0x1498	CTRL_CORE_PAD_GPMC_A22	K6	gpmc_a22	mmc2_dat7	gpmc_a16		vin4a_d15		vin3b_d3								gpio2_12	Driver off
0x149C	CTRL_CORE_PAD_GPMC_A23	J7	gpmc_a23	mmc2_clk	gpmc_a17		vin4a_fld0		vin3b_d4								gpio2_13	Driver off
0x14A0	CTRL_CORE_PAD_GPMC_A24	J4	gpmc_a24	mmc2_dat0	gpmc_a18				vin3b_d5								gpio2_14	Driver off
0x14A4	CTRL_CORE_PAD_GPMC_A25	J6	gpmc_a25	mmc2_dat1	gpmc_a19				vin3b_d6								gpio2_15	Driver off
0x14A8	CTRL_CORE_PAD_GPMC_A26	H4	gpmc_a26	mmc2_dat2	gpmc_a20				vin3b_d7								gpio2_16	Driver off
0x14AC	CTRL_CORE_PAD_GPMC_A27	H5	gpmc_a27	mmc2_dat3	gpmc_a21				vin3b_hsync1								gpio2_17	Driver off
0x14B0	CTRL_CORE_PAD_GPMC_CS1	H6	gpmc_cs1	mmc2_cmd	gpmc_a22		vin4a_de0		vin3b_vsync1								gpio2_18	Driver off

Copyright © 2015–2019, Texas Instruments Incorporated

表 4-3. Multiplexing Characteristics (continued)

ADDRESS	REGISTER NAME	BALL NUMBER	MUXMODE FIELD SETTINGS (CTRL_CORE_PAD_*[3:0])															
			0	1	2	3	4	5	6	7	8	9	10	11	12	13	14	15
0x14B4	CTRL_CORE_PAD_GPMC_CS0	T1	gpmc_cs0														gpio2_19	Driver off
0x14B8	CTRL_CORE_PAD_GPMC_CS2	P2	gpmc_cs2	qspi1_cs0													gpio2_20	Driver off
0x14BC	CTRL_CORE_PAD_GPMC_CS3	P1	gpmc_cs3	qspi1_cs1	vin3a_clk0	vout3_clk		gpmc_a1									gpio2_21	Driver off
0x14C0	CTRL_CORE_PAD_GPMC_CLK	P7	gpmc_clk	gpmc_cs7	clkout1	gpmc_wait1	vin4a_hsync0	vin4a_de0	vin3b_clk1	timer4	i2c3_scl	dma_evt1					gpio2_22	Driver off
0x14C4	CTRL_CORE_PAD_GPMC_ADVN_ALE	N1	gpmc_advn_ale	gpmc_cs6	clkout2	gpmc_wait1	vin4a_vsync0	gpmc_a2	gpmc_a23	timer3	i2c3_sda	dma_evt2					gpio2_23	Driver off
0x14C8	CTRL_CORE_PAD_GPMC_OEN_REN	M5	gpmc_oen_ren														gpio2_24	Driver off
0x14CC	CTRL_CORE_PAD_GPMC_WEN	M3	gpmc_wen														gpio2_25	Driver off
0x14D0	CTRL_CORE_PAD_GPMC_BEN0	N6	gpmc_ben0	gpmc_cs4		vin1b_hsync1			vin3b_de1	timer2		dma_evt3					gpio2_26	Driver off
0x14D4	CTRL_CORE_PAD_GPMC_BEN1	M4	gpmc_ben1	gpmc_cs5		vin1b_de1	vin3b_clk1	gpmc_a3	vin3b_fld1	timer1		dma_evt4					gpio2_27	Driver off
0x14D8	CTRL_CORE_PAD_GPMC_WAIT0	N2	gpmc_wait0														gpio2_28	Driver off
0x14DC	CTRL_CORE_PAD_VIN1A_CLK0	AG8	vin1a_clk0			vout3_d16	vout3_fld										gpio2_30	Driver off
0x14E0	CTRL_CORE_PAD_VIN1B_CLK1	AH7	vin1b_clk1						vin3a_clk0								gpio2_31	Driver off
0x14E4	CTRL_CORE_PAD_VIN1A_DE0	AD9	vin1a_de0	vin1b_hsync1		vout3_d17	vout3_de	uart7_rxd		timer16	spi3_sclk	kbd_row0	eQEP1A_in				gpio3_0	Driver off
0x14E8	CTRL_CORE_PAD_VIN1A_FLD0	AF9	vin1a_fld0	vin1b_vsync1			vout3_clk	uart7_txd		timer15	spi3_d1	kbd_row1	eQEP1B_in				gpio3_1	Driver off
0x14EC	CTRL_CORE_PAD_VIN1A_HSYNC0	AE9	vin1a_hsync0	vin1b_fld1			vout3_hsync	uart7_ctsn		timer14	spi3_d0		eQEP1_index				gpio3_2	Driver off
0x14F0	CTRL_CORE_PAD_VIN1A_VSYNC0	AF8	vin1a_vsync0	vin1b_de1			vout3_vsync	uart7_rtsn		timer13	spi3_cs0		eQEP1_strobe				gpio3_3	Driver off
0x14F4	CTRL_CORE_PAD_VIN1A_D0	AE8	vin1a_d0			vout3_d7	vout3_d23	uart8_rxd					ehrpwm1A				gpio3_4	Driver off
0x14F8	CTRL_CORE_PAD_VIN1A_D1	AD8	vin1a_d1			vout3_d6	vout3_d22	uart8_txd					ehrpwm1B				gpio3_5	Driver off
0x14FC	CTRL_CORE_PAD_VIN1A_D2	AG7	vin1a_d2			vout3_d5	vout3_d21	uart8_ctsn					ehrpwm1_tripzone_input				gpio3_6	Driver off
0x1500	CTRL_CORE_PAD_VIN1A_D3	AH6	vin1a_d3			vout3_d4	vout3_d20	uart8_rtsn					eCAP1_in_PWM1_out		pr1_pru0_gpi0	pr1_pru0_gpo0	gpio3_7	Driver off
0x1504	CTRL_CORE_PAD_VIN1A_D4	AH3	vin1a_d4			vout3_d3	vout3_d19						ehrpwm1_synci		pr1_pru0_gpi1	pr1_pru0_gpo1	gpio3_8	Driver off
0x1508	CTRL_CORE_PAD_VIN1A_D5	AH5	vin1a_d5			vout3_d2	vout3_d18						ehrpwm1_synco		pr1_pru0_gpi2	pr1_pru0_gpo2	gpio3_9	Driver off

Copyright © 2015–2019, Texas Instruments Incorporated

表 4-3. Multiplexing Characteristics (continued)

ADDRESS	REGISTER NAME	BALL NUMBER	MUXMODE FIELD SETTINGS (CTRL_CORE_PAD_*[3:0])															
			0	1	2	3	4	5	6	7	8	9	10	11	12	13	14	15
0x150C	CTRL_CORE_PAD_VIN1A_D6	AG6	vin1a_d6			vout3_d1	vout3_d17						eQEP2A_in		pr1_pru0_gpi3	pr1_pru0_gpo3	gpio3_10	Driver off
0x1510	CTRL_CORE_PAD_VIN1A_D7	AH4	vin1a_d7			vout3_d0	vout3_d16						eQEP2B_in		pr1_pru0_gpi4	pr1_pru0_gpo4	gpio3_11	Driver off
0x1514	CTRL_CORE_PAD_VIN1A_D8	AG4	vin1a_d8	vin1b_d7			vout3_d15					kbd_row2	eQEP2_index		pr1_pru0_gpi5	pr1_pru0_gpo5	gpio3_12	Driver off
0x1518	CTRL_CORE_PAD_VIN1A_D9	AG2	vin1a_d9	vin1b_d6			vout3_d14					kbd_row3	eQEP2_strobe		pr1_pru0_gpi6	pr1_pru0_gpo6	gpio3_13	Driver off
0x151C	CTRL_CORE_PAD_VIN1A_D10	AG3	vin1a_d10	vin1b_d5			vout3_d13					kbd_row4	pr1_edc_latch0_in		pr1_pru0_gpi7	pr1_pru0_gpo7	gpio3_14	Driver off
0x1520	CTRL_CORE_PAD_VIN1A_D11	AG5	vin1a_d11	vin1b_d4			vout3_d12	gpmc_a23				kbd_row5	pr1_edc_latch1_in		pr1_pru0_gpi8	pr1_pru0_gpo8	gpio3_15	Driver off
0x1524	CTRL_CORE_PAD_VIN1A_D12	AF2	vin1a_d12	vin1b_d3			vout3_d11	gpmc_a24				kbd_row6	pr1_edc_sync0_out		pr1_pru0_gpi9	pr1_pru0_gpo9	gpio3_16	Driver off
0x1528	CTRL_CORE_PAD_VIN1A_D13	AF6	vin1a_d13	vin1b_d2			vout3_d10	gpmc_a25				kbd_row7	pr1_edc_sync1_out		pr1_pru0_gpi10	pr1_pru0_gpo10	gpio3_17	Driver off
0x152C	CTRL_CORE_PAD_VIN1A_D14	AF3	vin1a_d14	vin1b_d1			vout3_d9	gpmc_a26				kbd_row8	pr1_edio_latch_in		pr1_pru0_gpi11	pr1_pru0_gpo11	gpio3_18	Driver off
0x1530	CTRL_CORE_PAD_VIN1A_D15	AF4	vin1a_d15	vin1b_d0			vout3_d8	gpmc_a27				kbd_col0	pr1_edio_sof		pr1_pru0_gpi12	pr1_pru0_gpo12	gpio3_19	Driver off
0x1534	CTRL_CORE_PAD_VIN1A_D16	AF1	vin1a_d16	vin1b_d7			vout3_d7		vin3a_d0			kbd_col1	pr1_edio_data_in0	pr1_edio_data_out0	pr1_pru0_gpi13	pr1_pru0_gpo13	gpio3_20	Driver off
0x1538	CTRL_CORE_PAD_VIN1A_D17	AE3	vin1a_d17	vin1b_d6			vout3_d6		vin3a_d1			kbd_col2	pr1_edio_data_in1	pr1_edio_data_out1	pr1_pru0_gpi14	pr1_pru0_gpo14	gpio3_21	Driver off
0x153C	CTRL_CORE_PAD_VIN1A_D18	AE5	vin1a_d18	vin1b_d5			vout3_d5		vin3a_d2			kbd_col3	pr1_edio_data_in2	pr1_edio_data_out2	pr1_pru0_gpi15	pr1_pru0_gpo15	gpio3_22	Driver off
0x1540	CTRL_CORE_PAD_VIN1A_D19	AE1	vin1a_d19	vin1b_d4			vout3_d4		vin3a_d3			kbd_col4	pr1_edio_data_in3	pr1_edio_data_out3	pr1_pru0_gpi16	pr1_pru0_gpo16	gpio3_23	Driver off
0x1544	CTRL_CORE_PAD_VIN1A_D20	AE2	vin1a_d20	vin1b_d3			vout3_d3		vin3a_d4			kbd_col5	pr1_edio_data_in4	pr1_edio_data_out4	pr1_pru0_gpi17	pr1_pru0_gpo17	gpio3_24	Driver off
0x1548	CTRL_CORE_PAD_VIN1A_D21	AE6	vin1a_d21	vin1b_d2			vout3_d2		vin3a_d5			kbd_col6	pr1_edio_data_in5	pr1_edio_data_out5	pr1_pru0_gpi18	pr1_pru0_gpo18	gpio3_25	Driver off
0x154C	CTRL_CORE_PAD_VIN1A_D22	AD2	vin1a_d22	vin1b_d1			vout3_d1		vin3a_d6			kbd_col7	pr1_edio_data_in6	pr1_edio_data_out6	pr1_pru0_gpi19	pr1_pru0_gpo19	gpio3_26	Driver off
0x1550	CTRL_CORE_PAD_VIN1A_D23	AD3	vin1a_d23	vin1b_d0			vout3_d0		vin3a_d7			kbd_col8	pr1_edio_data_in7	pr1_edio_data_out7	pr1_pru0_gpi20	pr1_pru0_gpo20	gpio3_27	Driver off
0x1554	CTRL_CORE_PAD_VIN2A_CLK0	E1	vin2a_clk0				vout2_fld	emu5				kbd_row0	eQEP1A_in		pr1_edio_data_in0	pr1_edio_data_out0	gpio3_28	Driver off
0x1558	CTRL_CORE_PAD_VIN2A_DE0	G2	vin2a_de0	vin2a_fld0	vin2b_fld1	vin2b_de1	vout2_de	emu6				kbd_row1	eQEP1B_in		pr1_edio_data_in1	pr1_edio_data_out1	gpio3_29	Driver off
0x155C	CTRL_CORE_PAD_VIN2A_FLD0	H7	vin2a_fld0		vin2b_clk1		vout2_clk	emu7					eQEP1_index		pr1_edio_data_in2	pr1_edio_data_out2	gpio3_30	Driver off
0x1560	CTRL_CORE_PAD_VIN2A_HSYNC0	G1	vin2a_hsync0			vin2b_hsync1	vout2_hsync	emu8		uart9_rxd	spi4_sclk	kbd_row2	eQEP1_strobe	pr1_uart0_cts_n	pr1_edio_data_in3	pr1_edio_data_out3	gpio3_31	Driver off
0x1564	CTRL_CORE_PAD_VIN2A_VSYNC0	G6	vin2a_vsync0			vin2b_vsync1	vout2_vsync	emu9		uart9_txd	spi4_d1	kbd_row3	ehrpwm1A	pr1_uart0_rts_n	pr1_edio_data_in4	pr1_edio_data_out4	gpio4_0	Driver off
0x1568	CTRL_CORE_PAD_VIN2A_D0	F2	vin2a_d0				vout2_d23	emu10		uart9_ctsn	spi4_d0	kbd_row4	ehrpwm1B	pr1_uart0_rxd	pr1_edio_data_in5	pr1_edio_data_out5	gpio4_1	Driver off

Copyright © 2015–2019, Texas Instruments Incorporated

表 4-3. Multiplexing Characteristics (continued)

ADDRESS	REGISTER NAME	BALL NUMBER	MUXMODE FIELD SETTINGS (CTRL_CORE_PAD_*[3:0])															
			0	1	2	3	4	5	6	7	8	9	10	11	12	13	14	15
0x156C	CTRL_CORE_PAD_VIN2A_D1	F3	vin2a_d1				vout2_d22	emu11		uart9_rtsn	spi4_cs0	kbd_row5	ehrpwm1_tripzone_input	pr1_uart0_txd	pr1_edio_data_in6	pr1_edio_data_out6	gpio4_2	Driver off
0x1570	CTRL_CORE_PAD_VIN2A_D2	D1	vin2a_d2				vout2_d21	emu12			uart10_rxd	kbd_row6	eCAP1_in_PWM1_out	pr1_ecap0_ecap_capin_apwm_o	pr1_edio_data_in7	pr1_edio_data_out7	gpio4_3	Driver off
0x1574	CTRL_CORE_PAD_VIN2A_D3	E2	vin2a_d3				vout2_d20	emu13			uart10_txd	kbd_col0	ehrpwm1_synci	pr1_edc_latch0_in	pr1_pru1_gpi0	pr1_pru1_gpo0	gpio4_4	Driver off
0x1578	CTRL_CORE_PAD_VIN2A_D4	D2	vin2a_d4				vout2_d19	emu14			uart10_ctsn	kbd_col1	ehrpwm1_synco	pr1_edc_sync0_out	pr1_pru1_gpi1	pr1_pru1_gpo1	gpio4_5	Driver off
0x157C	CTRL_CORE_PAD_VIN2A_D5	F4	vin2a_d5				vout2_d18	emu15			uart10_rtsn	kbd_col2	eQEP2A_in	pr1_edio_sof	pr1_pru1_gpi2	pr1_pru1_gpo2	gpio4_6	Driver off
0x1580	CTRL_CORE_PAD_VIN2A_D6	C1	vin2a_d6				vout2_d17	emu16			mii1_rxd1	kbd_col3	eQEP2B_in	pr1_mii_mt1_clk	pr1_pru1_gpi3	pr1_pru1_gpo3	gpio4_7	Driver off
0x1584	CTRL_CORE_PAD_VIN2A_D7	E4	vin2a_d7				vout2_d16	emu17			mii1_rxd2	kbd_col4	eQEP2_index	pr1_mii1_txen	pr1_pru1_gpi4	pr1_pru1_gpo4	gpio4_8	Driver off
0x1588	CTRL_CORE_PAD_VIN2A_D8	F5	vin2a_d8				vout2_d15	emu18			mii1_rxd3	kbd_col5	eQEP2_strobe	pr1_mii1_txd3	pr1_pru1_gpi5	pr1_pru1_gpo5	gpio4_9	Driver off
0x158C	CTRL_CORE_PAD_VIN2A_D9	E6	vin2a_d9				vout2_d14	emu19			mii1_rxd0	kbd_col6	ehrpwm2A	pr1_mii1_txd2	pr1_pru1_gpi6	pr1_pru1_gpo6	gpio4_10	Driver off
0x1590	CTRL_CORE_PAD_VIN2A_D10	D3	vin2a_d10			mdio_mclk	vout2_d13					kbd_col7	ehrpwm2B	pr1_mdio_mdclk	pr1_pru1_gpi7	pr1_pru1_gpo7	gpio4_11	Driver off
0x1594	CTRL_CORE_PAD_VIN2A_D11	F6	vin2a_d11			mdio_d	vout2_d12					kbd_row7	ehrpwm2_tripzone_input	pr1_mdio_data	pr1_pru1_gpi8	pr1_pru1_gpo8	gpio4_12	Driver off
0x1598	CTRL_CORE_PAD_VIN2A_D12	D5	vin2a_d12			rgmii1_txc	vout2_d11				mii1_rxclk	kbd_col8	eCAP2_in_PWM2_out	pr1_mii1_txd1	pr1_pru1_gpi9	pr1_pru1_gpo9	gpio4_13	Driver off
0x159C	CTRL_CORE_PAD_VIN2A_D13	C2	vin2a_d13			rgmii1_txctl	vout2_d10				mii1_rxdv	kbd_row8	eQEP3A_in	pr1_mii1_txd0	pr1_pru1_gpi10	pr1_pru1_gpo10	gpio4_14	Driver off
0x15A0	CTRL_CORE_PAD_VIN2A_D14	C3	vin2a_d14			rgmii1_txd3	vout2_d9				mii1_txclk		eQEP3B_in	pr1_mii_mr1_clk	pr1_pru1_gpi11	pr1_pru1_gpo11	gpio4_15	Driver off
0x15A4	CTRL_CORE_PAD_VIN2A_D15	C4	vin2a_d15			rgmii1_txd2	vout2_d8				mii1_txd0		eQEP3_index	pr1_mii1_rxdv	pr1_pru1_gpi12	pr1_pru1_gpo12	gpio4_16	Driver off
0x15A8	CTRL_CORE_PAD_VIN2A_D16	B2	vin2a_d16		vin2b_d7	rgmii1_txd1	vout2_d7		vin3a_d8		mii1_txd1		eQEP3_strobe	pr1_mii1_rxd3	pr1_pru1_gpi13	pr1_pru1_gpo13	gpio4_24	Driver off
0x15AC	CTRL_CORE_PAD_VIN2A_D17	D6	vin2a_d17		vin2b_d6	rgmii1_txd0	vout2_d6		vin3a_d9		mii1_txd2		ehrpwm3A	pr1_mii1_rxd2	pr1_pru1_gpi14	pr1_pru1_gpo14	gpio4_25	Driver off
0x15B0	CTRL_CORE_PAD_VIN2A_D18	C5	vin2a_d18		vin2b_d5	rgmii1_rxc	vout2_d5		vin3a_d10		mii1_txd3		ehrpwm3B	pr1_mii1_rxd1	pr1_pru1_gpi15	pr1_pru1_gpo15	gpio4_26	Driver off
0x15B4	CTRL_CORE_PAD_VIN2A_D19	A3	vin2a_d19		vin2b_d4	rgmii1_rxctl	vout2_d4		vin3a_d11		mii1_txer		ehrpwm3_tripzone_input	pr1_mii1_rxd0	pr1_pru1_gpi16	pr1_pru1_gpo16	gpio4_27	Driver off
0x15B8	CTRL_CORE_PAD_VIN2A_D20	B3	vin2a_d20		vin2b_d3	rgmii1_rxd3	vout2_d3	vin3a_de0	vin3a_d12		mii1_rxer		eCAP3_in_PWM3_out	pr1_mii1_rxer	pr1_pru1_gpi17	pr1_pru1_gpo17	gpio4_28	Driver off
0x15BC	CTRL_CORE_PAD_VIN2A_D21	B4	vin2a_d21		vin2b_d2	rgmii1_rxd2	vout2_d2	vin3a_fld0	vin3a_d13		mii1_col			pr1_mii1_rxlink	pr1_pru1_gpi18	pr1_pru1_gpo18	gpio4_29	Driver off
0x15C0	CTRL_CORE_PAD_VIN2A_D22	B5	vin2a_d22		vin2b_d1	rgmii1_rxd1	vout2_d1	vin3a_hsync0	vin3a_d14		mii1_crs			pr1_mii1_col	pr1_pru1_gpi19	pr1_pru1_gpo19	gpio4_30	Driver off

Copyright © 2015–2019, Texas Instruments Incorporated

表 4-3. Multiplexing Characteristics (continued)

ADDRESS	REGISTER NAME	BALL NUMBER	MUXMODE FIELD SETTINGS (CTRL_CORE_PAD_*[3:0])															
			0	1	2	3	4	5	6	7	8	9	10	11	12	13	14	15
0x15C4	CTRL_CORE_PAD_VIN2A_D23	A4	vin2a_d23		vin2b_d0	rgmii1_rxd0	vout2_d0	vin3a_vsync0	vin3a_d15		mii1_txen			pr1_mii1_crs	pr1_pru1_gpi20	pr1_pru1_gpo20	gpio4_31	Driver off
0x15C8	CTRL_CORE_PAD_VOUT1_CLK	D11	vout1_clk			vin4a_fld0	vin3a_fld0				spi3_cs0						gpio4_19	Driver off
0x15CC	CTRL_CORE_PAD_VOUT1_DE	B10	vout1_de			vin4a_de0	vin3a_de0				spi3_d1						gpio4_20	Driver off
0x15D0	CTRL_CORE_PAD_VOUT1_FLD	B11	vout1_fld			vin4a_clk0	vin3a_clk0				spi3_cs1						gpio4_21	Driver off
0x15D4	CTRL_CORE_PAD_VOUT1_HSYNC	C11	vout1_hsync			vin4a_hsync0	vin3a_hsync0				spi3_d0						gpio4_22	Driver off
0x15D8	CTRL_CORE_PAD_VOUT1_VSYNC	E11	vout1_vsync			vin4a_vsync0	vin3a_vsync0				spi3_sclk				pr2_pru1_gpi17	pr2_pru1_gpo17	gpio4_23	Driver off
0x15DC	CTRL_CORE_PAD_VOUT1_D0	F11	vout1_d0		uart5_rxd	vin4a_d16	vin3a_d16				spi3_cs2		pr1_uart0_cts_n		pr2_pru1_gpi18	pr2_pru1_gpo18	gpio8_0	Driver off
0x15E0	CTRL_CORE_PAD_VOUT1_D1	G10	vout1_d1		uart5_txd	vin4a_d17	vin3a_d17						pr1_uart0_rts_n		pr2_pru1_gpi19	pr2_pru1_gpo19	gpio8_1	Driver off
0x15E4	CTRL_CORE_PAD_VOUT1_D2	F10	vout1_d2		emu2	vin4a_d18	vin3a_d18	obs0	obs16	obs_irq1			pr1_uart0_rxd		pr2_pru1_gpi20	pr2_pru1_gpo20	gpio8_2	Driver off
0x15E8	CTRL_CORE_PAD_VOUT1_D3	G11	vout1_d3		emu5	vin4a_d19	vin3a_d19	obs1	obs17	obs_dmarq1			pr1_uart0_txd		pr2_pru0_gpi0	pr2_pru0_gpo0	gpio8_3	Driver off
0x15EC	CTRL_CORE_PAD_VOUT1_D4	E9	vout1_d4		emu6	vin4a_d20	vin3a_d20	obs2	obs18				pr1_ecap0_ecap_capin_apwm_o		pr2_pru0_gpi1	pr2_pru0_gpo1	gpio8_4	Driver off
0x15F0	CTRL_CORE_PAD_VOUT1_D5	F9	vout1_d5		emu7	vin4a_d21	vin3a_d21	obs3	obs19				pr2_edc_latch0_in		pr2_pru0_gpi2	pr2_pru0_gpo2	gpio8_5	Driver off
0x15F4	CTRL_CORE_PAD_VOUT1_D6	F8	vout1_d6		emu8	vin4a_d22	vin3a_d22	obs4	obs20				pr2_edc_latch1_in		pr2_pru0_gpi3	pr2_pru0_gpo3	gpio8_6	Driver off
0x15F8	CTRL_CORE_PAD_VOUT1_D7	E7	vout1_d7		emu9	vin4a_d23	vin3a_d23						pr2_edc_sync0_out		pr2_pru0_gpi4	pr2_pru0_gpo4	gpio8_7	Driver off
0x15FC	CTRL_CORE_PAD_VOUT1_D8	E8	vout1_d8		uart6_rxd	vin4a_d8	vin3a_d8						pr2_edc_sync1_out		pr2_pru0_gpi5	pr2_pru0_gpo5	gpio8_8	Driver off
0x1600	CTRL_CORE_PAD_VOUT1_D9	D9	vout1_d9		uart6_txd	vin4a_d9	vin3a_d9						pr2_edio_latch_in		pr2_pru0_gpi6	pr2_pru0_gpo6	gpio8_9	Driver off
0x1604	CTRL_CORE_PAD_VOUT1_D10	D7	vout1_d10		emu3	vin4a_d10	vin3a_d10	obs5	obs21	obs_irq2			pr2_edio_sof		pr2_pru0_gpi7	pr2_pru0_gpo7	gpio8_10	Driver off
0x1608	CTRL_CORE_PAD_VOUT1_D11	D8	vout1_d11		emu10	vin4a_d11	vin3a_d11	obs6	obs22	obs_dmarq2			pr2_uart0_cts_n		pr2_pru0_gpi8	pr2_pru0_gpo8	gpio8_11	Driver off
0x160C	CTRL_CORE_PAD_VOUT1_D12	A5	vout1_d12		emu11	vin4a_d12	vin3a_d12	obs7	obs23				pr2_uart0_rts_n		pr2_pru0_gpi9	pr2_pru0_gpo9	gpio8_12	Driver off
0x1610	CTRL_CORE_PAD_VOUT1_D13	C6	vout1_d13		emu12	vin4a_d13	vin3a_d13	obs8	obs24				pr2_uart0_rxd		pr2_pru0_gpi10	pr2_pru0_gpo10	gpio8_13	Driver off
0x1614	CTRL_CORE_PAD_VOUT1_D14	C8	vout1_d14		emu13	vin4a_d14	vin3a_d14	obs9	obs25				pr2_uart0_txd		pr2_pru0_gpi11	pr2_pru0_gpo11	gpio8_14	Driver off
0x1618	CTRL_CORE_PAD_VOUT1_D15	C7	vout1_d15		emu14	vin4a_d15	vin3a_d15	obs10	obs26				pr2_ecap0_ecap_capin_apwm_o		pr2_pru0_gpi12	pr2_pru0_gpo12	gpio8_15	Driver off
0x161C	CTRL_CORE_PAD_VOUT1_D16	B7	vout1_d16		uart7_rxd	vin4a_d0	vin3a_d0						pr2_edio_data_in0	pr2_edio_data_out0	pr2_pru0_gpi13	pr2_pru0_gpo13	gpio8_16	Driver off

Copyright © 2015–2019, Texas Instruments Incorporated

表 4-3. Multiplexing Characteristics (continued)

ADDRESS	REGISTER NAME	BALL NUMBER	MUXMODE FIELD SETTINGS (CTRL_CORE_PAD_*[3:0])															
			0	1	2	3	4	5	6	7	8	9	10	11	12	13	14	15
0x1620	CTRL_CORE_PAD_VOUT1_D17	B8	vout1_d17		uart7_txd	vin4a_d1	vin3a_d1						pr2_edio_data_in1	pr2_edio_data_out1	pr2_pru0_gpi14	pr2_pru0_gpo14	gpio8_17	Driver off
0x1624	CTRL_CORE_PAD_VOUT1_D18	A7	vout1_d18		emu4	vin4a_d2	vin3a_d2	obs11	obs27				pr2_edio_data_in2	pr2_edio_data_out2	pr2_pru0_gpi15	pr2_pru0_gpo15	gpio8_18	Driver off
0x1628	CTRL_CORE_PAD_VOUT1_D19	A8	vout1_d19		emu15	vin4a_d3	vin3a_d3	obs12	obs28				pr2_edio_data_in3	pr2_edio_data_out3	pr2_pru0_gpi16	pr2_pru0_gpo16	gpio8_19	Driver off
0x162C	CTRL_CORE_PAD_VOUT1_D20	C9	vout1_d20		emu16	vin4a_d4	vin3a_d4	obs13	obs29				pr2_edio_data_in4	pr2_edio_data_out4	pr2_pru0_gpi17	pr2_pru0_gpo17	gpio8_20	Driver off
0x1630	CTRL_CORE_PAD_VOUT1_D21	A9	vout1_d21		emu17	vin4a_d5	vin3a_d5	obs14	obs30				pr2_edio_data_in5	pr2_edio_data_out5	pr2_pru0_gpi18	pr2_pru0_gpo18	gpio8_21	Driver off
0x1634	CTRL_CORE_PAD_VOUT1_D22	B9	vout1_d22		emu18	vin4a_d6	vin3a_d6	obs15	obs31				pr2_edio_data_in6	pr2_edio_data_out6	pr2_pru0_gpi19	pr2_pru0_gpo19	gpio8_22	Driver off
0x1638	CTRL_CORE_PAD_VOUT1_D23	A10	vout1_d23		emu19	vin4a_d7	vin3a_d7				spi3_cs3		pr2_edio_data_in7	pr2_edio_data_out7	pr2_pru0_gpi20	pr2_pru0_gpo20	gpio8_23	Driver off
0x163C	CTRL_CORE_PAD_MDIO_MCLK	V1	mdio_mclk	uart3_rtsn		mii0_col	vin2a_clk0	vin4b_clk1						pr1_mii0_col	pr2_pru1_gpi0	pr2_pru1_gpo0	gpio5_15	Driver off
0x1640	CTRL_CORE_PAD_MDIO_D	U4	mdio_d	uart3_ctsn		mii0_txer	vin2a_d0	vin4b_d0						pr1_mii0_rxlink	pr2_pru1_gpi1	pr2_pru1_gpo1	gpio5_16	Driver off
0x1644	CTRL_CORE_PAD_RMII_MHZ_50_CLK	U3	RMII_MHZ_50_CLK				vin2a_d11								pr2_pru1_gpi2	pr2_pru1_gpo2	gpio5_17	Driver off
0x1648	CTRL_CORE_PAD_UART3_RXD	V2	uart3_rxd		rmii1_crs	mii0_rxdv	vin2a_d1	vin4b_d1		spi3_sclk				pr1_mii0_rxdv	pr2_pru1_gpi3	pr2_pru1_gpo3	gpio5_18	Driver off
0x164C	CTRL_CORE_PAD_UART3_TXD	Y1	uart3_txd		rmii1_rxer	mii0_rxclk	vin2a_d2	vin4b_d2		spi3_d1	spi4_cs1			pr1_mii_mr0_clk	pr2_pru1_gpi4	pr2_pru1_gpo4	gpio5_19	Driver off
0x1650	CTRL_CORE_PAD_RGMII0_TXC	W9	rgmii0_txc	uart3_ctsn	rmii1_rxd1	mii0_rxd3	vin2a_d3	vin4b_d3		spi3_d0	spi4_cs2			pr1_mii0_rxd3	pr2_pru1_gpi5	pr2_pru1_gpo5	gpio5_20	Driver off
0x1654	CTRL_CORE_PAD_RGMII0_TXCTL	V9	rgmii0_txctl	uart3_rtsn	rmii1_rxd0	mii0_rxd2	vin2a_d4	vin4b_d4		spi3_cs0	spi4_cs3			pr1_mii0_rxd2	pr2_pru1_gpi6	pr2_pru1_gpo6	gpio5_21	Driver off
0x1658	CTRL_CORE_PAD_RGMII0_TXD3	V7	rgmii0_txd3	rmii0_crs		mii0_crs	vin2a_de0	vin4b_de1		spi4_sclk	uart4_rxd			pr1_mii0_crs	pr2_pru1_gpi7	pr2_pru1_gpo7	gpio5_22	Driver off
0x165C	CTRL_CORE_PAD_RGMII0_TXD2	U7	rgmii0_txd2	rmii0_rxer		mii0_rxer	vin2a_hsync0	vin4b_hsync1		spi4_d1	uart4_txd			pr1_mii0_rxer	pr2_pru1_gpi8	pr2_pru1_gpo8	gpio5_23	Driver off
0x1660	CTRL_CORE_PAD_RGMII0_TXD1	V6	rgmii0_txd1	rmii0_rxd1		mii0_rxd1	vin2a_vsync0	vin4b_vsync1		spi4_d0	uart4_ctsn			pr1_mii0_rxd1	pr2_pru1_gpi9	pr2_pru1_gpo9	gpio5_24	Driver off
0x1664	CTRL_CORE_PAD_RGMII0_TXD0	U6	rgmii0_txd0	rmii0_rxd0		mii0_rxd0	vin2a_d10			spi4_cs0	uart4_rtsn			pr1_mii0_rxd0	pr2_pru1_gpi10	pr2_pru1_gpo10	gpio5_25	Driver off
0x1668	CTRL_CORE_PAD_RGMII0_RXC	U5	rgmii0_rxc		rmii1_txen	mii0_txclk	vin2a_d5	vin4b_d5						pr1_mii_mt0_clk	pr2_pru1_gpi11	pr2_pru1_gpo11	gpio5_26	Driver off
0x166C	CTRL_CORE_PAD_RGMII0_RXCTL	V5	rgmii0_rxctl		rmii1_txd1	mii0_txd3	vin2a_d6	vin4b_d6						pr1_mii0_txd3	pr2_pru1_gpi12	pr2_pru1_gpo12	gpio5_27	Driver off
0x1670	CTRL_CORE_PAD_RGMII0_RXD3	V4	rgmii0_rxd3		rmii1_txd0	mii0_txd2	vin2a_d7	vin4b_d7						pr1_mii0_txd2	pr2_pru1_gpi13	pr2_pru1_gpo13	gpio5_28	Driver off
0x1674	CTRL_CORE_PAD_RGMII0_RXD2	V3	rgmii0_rxd2	rmii0_txen		mii0_txen	vin2a_d8							pr1_mii0_txen	pr2_pru1_gpi14	pr2_pru1_gpo14	gpio5_29	Driver off
0x1678	CTRL_CORE_PAD_RGMII0_RXD1	Y2	rgmii0_rxd1	rmii0_txd1		mii0_txd1	vin2a_d9							pr1_mii0_txd1	pr2_pru1_gpi15	pr2_pru1_gpo15	gpio5_30	Driver off

Copyright © 2015–2019, Texas Instruments Incorporated

表 4-3. Multiplexing Characteristics (continued)

ADDRESS	REGISTER NAME	BALL NUMBER	MUXMODE FIELD SETTINGS (CTRL_CORE_PAD_*[3:0])															
			0	1	2	3	4	5	6	7	8	9	10	11	12	13	14	15
0x167C	CTRL_CORE_PAD_RGMII0_RXD0	W2	rgmii0_rxd0	rmii0_txd0		mii0_txd0	vin2a_fld0	vin4b_fld1						pr1_mii0_txd0	pr2_pru1_gpi16	pr2_pru1_gpo16	gpio5_31	Driver off
0x1680	CTRL_CORE_PAD_USB1_DRVVBUS	AB10	usb1_drvvbus							timer16							gpio6_12	Driver off
0x1684	CTRL_CORE_PAD_USB2_DRVVBUS	AC10	usb2_drvvbus							timer15							gpio6_13	Driver off
0x1688	CTRL_CORE_PAD_GPIO6_14	E21	gpio6_14	mcasp1_axr8	dcan2_tx	uart10_rxd			vout2_hsync		vin4a_hsync0	i2c3_sda	timer1				gpio6_14	Driver off
0x168C	CTRL_CORE_PAD_GPIO6_15	F20	gpio6_15	mcasp1_axr9	dcan2_rx	uart10_txd			vout2_vsync		vin4a_vsync0	i2c3_scl	timer2				gpio6_15	Driver off
0x1690	CTRL_CORE_PAD_GPIO6_16	F21	gpio6_16	mcasp1_axr10					vout2_fld		vin4a_fld0	clkout1	timer3				gpio6_16	Driver off
0x1694	CTRL_CORE_PAD_XREF_CLK0	D18	xref_clk0	mcasp2_axr8	mcasp1_axr4	mcasp1_ahclkx	mcasp5_ahclkx			vin6a_d0	hdq0	clkout2	timer13	pr2_mii1_col	pr2_pru1_gpi5	pr2_pru1_gpo5	gpio6_17	Driver off
0x1698	CTRL_CORE_PAD_XREF_CLK1	E17	xref_clk1	mcasp2_axr9	mcasp1_axr5	mcasp2_ahclkx	mcasp6_ahclkx			vin6a_clk0			timer14	pr2_mii1_crs	pr2_pru1_gpi6	pr2_pru1_gpo6	gpio6_18	Driver off
0x169C	CTRL_CORE_PAD_XREF_CLK2	B26	xref_clk2	mcasp2_axr10	mcasp1_axr6	mcasp3_ahclkx	mcasp7_ahclkx		vout2_clk		vin4a_clk0		timer15				gpio6_19	Driver off
0x16A0	CTRL_CORE_PAD_XREF_CLK3	C23	xref_clk3	mcasp2_axr11	mcasp1_axr7	mcasp4_ahclkx	mcasp8_ahclkx		vout2_de	hdq0	vin4a_de0	clkout3	timer16				gpio6_20	Driver off
0x16A4	CTRL_CORE_PAD_MCASP1_ACLKX	C14	mcasp1_aclkx							vin6a_fld0			i2c3_sda	pr2_mdio_mdclk	pr2_pru1_gpi7	pr2_pru1_gpo7	gpio7_31	Driver off
0x16A8	CTRL_CORE_PAD_MCASP1_FSX	D14	mcasp1_fsx							vin6a_de0			i2c3_scl	pr2_mdio_data			gpio7_30	Driver off
0x16AC	CTRL_CORE_PAD_MCASP1_ACLKR	B14	mcasp1_aclkr	mcasp7_axr2					vout2_d0		vin4a_d0		i2c4_sda				gpio5_0	Driver off
0x16B0	CTRL_CORE_PAD_MCASP1_FSR	J14	mcasp1_fsr	mcasp7_axr3					vout2_d1		vin4a_d1		i2c4_scl				gpio5_1	Driver off
0x16B4	CTRL_CORE_PAD_MCASP1_AXR0	G12	mcasp1_axr0			uart6_rxd				vin6a_vsync0			i2c5_sda	pr2_mii0_rxer	pr2_pru1_gpi8	pr2_pru1_gpo8	gpio5_2	Driver off
0x16B8	CTRL_CORE_PAD_MCASP1_AXR1	F12	mcasp1_axr1			uart6_txd				vin6a_hsync0			i2c5_scl	pr2_mii_mt0_clk	pr2_pru1_gpi9	pr2_pru1_gpo9	gpio5_3	Driver off
0x16BC	CTRL_CORE_PAD_MCASP1_AXR2	G13	mcasp1_axr2	mcasp6_axr2		uart6_ctsn			vout2_d2		vin4a_d2						gpio5_4	Driver off
0x16C0	CTRL_CORE_PAD_MCASP1_AXR3	J11	mcasp1_axr3	mcasp6_axr3		uart6_rtsn			vout2_d3		vin4a_d3						gpio5_5	Driver off
0x16C4	CTRL_CORE_PAD_MCASP1_AXR4	E12	mcasp1_axr4	mcasp4_axr2					vout2_d4		vin4a_d4						gpio5_6	Driver off
0x16C8	CTRL_CORE_PAD_MCASP1_AXR5	F13	mcasp1_axr5	mcasp4_axr3					vout2_d5		vin4a_d5						gpio5_7	Driver off
0x16CC	CTRL_CORE_PAD_MCASP1_AXR6	C12	mcasp1_axr6	mcasp5_axr2					vout2_d6		vin4a_d6						gpio5_8	Driver off
0x16D0	CTRL_CORE_PAD_MCASP1_AXR7	D12	mcasp1_axr7	mcasp5_axr3					vout2_d7		vin4a_d7		timer4				gpio5_9	Driver off
0x16D4	CTRL_CORE_PAD_MCASP1_AXR8	B12	mcasp1_axr8	mcasp6_axr0		spi3_sclk				vin6a_d15			timer5	pr2_mii0_txen	pr2_pru1_gpi10	pr2_pru1_gpo10	gpio5_10	Driver off
0x16D8	CTRL_CORE_PAD_MCASP1_AXR9	A11	mcasp1_axr9	mcasp6_axr1		spi3_d1				vin6a_d14			timer6	pr2_mii0_txd3	pr2_pru1_gpi11	pr2_pru1_gpo11	gpio5_11	Driver off

Copyright © 2015–2019, Texas Instruments Incorporated

表 4-3. Multiplexing Characteristics (continued)

ADDRESS	REGISTER NAME	BALL NUMBER	MUXMODE FIELD SETTINGS (CTRL_CORE_PAD_*[3:0])															
			0	1	2	3	4	5	6	7	8	9	10	11	12	13	14	15
0x16DC	CTRL_CORE_PAD_MCASP1_AXR10	B13	mcasp1_axr10	mcasp6_aclkx	mcasp6_aclkr	spi3_d0				vin6a_d13			timer7	pr2_mii0_txd2	pr2_pru1_gpi12	pr2_pru1_gpo12	gpio5_12	Driver off
0x16E0	CTRL_CORE_PAD_MCASP1_AXR11	A12	mcasp1_axr11	mcasp6_fsx	mcasp6_fsr	spi3_cs0				vin6a_d12			timer8	pr2_mii0_txd1	pr2_pru1_gpi13	pr2_pru1_gpo13	gpio4_17	Driver off
0x16E4	CTRL_CORE_PAD_MCASP1_AXR12	E14	mcasp1_axr12	mcasp7_axr0		spi3_cs1				vin6a_d11			timer9	pr2_mii0_txd0	pr2_pru1_gpi14	pr2_pru1_gpo14	gpio4_18	Driver off
0x16E8	CTRL_CORE_PAD_MCASP1_AXR13	A13	mcasp1_axr13	mcasp7_axr1						vin6a_d10			timer10	pr2_mii_mr0_clk	pr2_pru1_gpi15	pr2_pru1_gpo15	gpio6_4	Driver off
0x16EC	CTRL_CORE_PAD_MCASP1_AXR14	G14	mcasp1_axr14	mcasp7_aclkx	mcasp7_aclkr					vin6a_d9			timer11	pr2_mii0_rxdv	pr2_pru1_gpi16	pr2_pru1_gpo16	gpio6_5	Driver off
0x16F0	CTRL_CORE_PAD_MCASP1_AXR15	F14	mcasp1_axr15	mcasp7_fsx	mcasp7_fsr					vin6a_d8			timer12	pr2_mii0_rxd3	pr2_pru0_gpi20	pr2_pru0_gpo20	gpio6_6	Driver off
0x16F4	CTRL_CORE_PAD_MCASP2_ACLKX	A19	mcasp2_aclkx							vin6a_d7				pr2_mii0_rxd2	pr2_pru0_gpi18	pr2_pru0_gpo18		Driver off
0x16F8	CTRL_CORE_PAD_MCASP2_FSX	A18	mcasp2_fsx							vin6a_d6				pr2_mii0_rxd1	pr2_pru0_gpi19	pr2_pru0_gpo19		Driver off
0x16FC	CTRL_CORE_PAD_MCASP2_ACLKR	E15	mcasp2_aclkr	mcasp8_axr2					vout2_d8		vin4a_d8							Driver off
0x1700	CTRL_CORE_PAD_MCASP2_FSR	A20	mcasp2_fsr	mcasp8_axr3					vout2_d9		vin4a_d9							Driver off
0x1704	CTRL_CORE_PAD_MCASP2_AXR0	B15	mcasp2_axr0						vout2_d10		vin4a_d10							Driver off
0x1708	CTRL_CORE_PAD_MCASP2_AXR1	A15	mcasp2_axr1						vout2_d11		vin4a_d11							Driver off
0x170C	CTRL_CORE_PAD_MCASP2_AXR2	C15	mcasp2_axr2	mcasp3_axr2						vin6a_d5				pr2_mii0_rxd0	pr2_pru0_gpi16	pr2_pru0_gpo16	gpio6_8	Driver off
0x1710	CTRL_CORE_PAD_MCASP2_AXR3	A16	mcasp2_axr3	mcasp3_axr3						vin6a_d4				pr2_mii0_rxlink	pr2_pru0_gpi17	pr2_pru0_gpo17	gpio6_9	Driver off
0x1714	CTRL_CORE_PAD_MCASP2_AXR4	D15	mcasp2_axr4	mcasp8_axr0					vout2_d12		vin4a_d12						gpio1_4	Driver off
0x1718	CTRL_CORE_PAD_MCASP2_AXR5	B16	mcasp2_axr5	mcasp8_axr1					vout2_d13		vin4a_d13						gpio6_7	Driver off
0x171C	CTRL_CORE_PAD_MCASP2_AXR6	B17	mcasp2_axr6	mcasp8_aclkx	mcasp8_aclkr				vout2_d14		vin4a_d14						gpio2_29	Driver off
0x1720	CTRL_CORE_PAD_MCASP2_AXR7	A17	mcasp2_axr7	mcasp8_fsx	mcasp8_fsr				vout2_d15		vin4a_d15						gpio1_5	Driver off
0x1724	CTRL_CORE_PAD_MCASP3_ACLKX	B18	mcasp3_aclkx	mcasp3_aclkr	mcasp2_axr12	uart7_rxd				vin6a_d3				pr2_mii0_crs	pr2_pru0_gpi12	pr2_pru0_gpo12	gpio5_13	Driver off
0x1728	CTRL_CORE_PAD_MCASP3_FSX	F15	mcasp3_fsx	mcasp3_fsr	mcasp2_axr13	uart7_txd				vin6a_d2				pr2_mii0_col	pr2_pru0_gpi13	pr2_pru0_gpo13	gpio5_14	Driver off
0x172C	CTRL_CORE_PAD_MCASP3_AXR0	B19	mcasp3_axr0		mcasp2_axr14	uart7_ctsn	uart5_rxd			vin6a_d1				pr2_mii1_rxer	pr2_pru0_gpi14	pr2_pru0_gpo14		Driver off
0x1730	CTRL_CORE_PAD_MCASP3_AXR1	C17	mcasp3_axr1		mcasp2_axr15	uart7_rtsn	uart5_txd			vin6a_d0		vin5a_fld0		pr2_mii1_rxlink	pr2_pru0_gpi15	pr2_pru0_gpo15		Driver off
0x1734	CTRL_CORE_PAD_MCASP4_ACLKX	C18	mcasp4_aclkx	mcasp4_aclkr	spi3_sclk	uart8_rxd	i2c4_sda		vout2_d16		vin4a_d16	vin5a_d15						Driver off
0x1738	CTRL_CORE_PAD_MCASP4_FSX	A21	mcasp4_fsx	mcasp4_fsr	spi3_d1	uart8_txd	i2c4_scl		vout2_d17		vin4a_d17	vin5a_d14						Driver off

Copyright © 2015–2019, Texas Instruments Incorporated

表 4-3. Multiplexing Characteristics (continued)

ADDRESS	REGISTER NAME	BALL NUMBER	MUXMODE FIELD SETTINGS (CTRL_CORE_PAD_*[3:0])															
			0	1	2	3	4	5	6	7	8	9	10	11	12	13	14	15
0x173C	CTRL_CORE_PAD_MCASP4_AXR0	G16	mcasp4_axr0		spi3_d0	uart8_ctsn	uart4_rxd		vout2_d18		vin4a_d18	vin5a_d13						Driver off
0x1740	CTRL_CORE_PAD_MCASP4_AXR1	D17	mcasp4_axr1		spi3_cs0	uart8_rtsn	uart4_txd		vout2_d19		vin4a_d19	vin5a_d12			pr2_pru1_gpi0	pr2_pru1_gpo0		Driver off
0x1744	CTRL_CORE_PAD_MCASP5_ACLKX	AA3	mcasp5_aclkx	mcasp5_aclkr	spi4_sclk	uart9_rxd	i2c5_sda		vout2_d20		vin4a_d20	vin5a_d11			pr2_pru1_gpi1	pr2_pru1_gpo1		Driver off
0x1748	CTRL_CORE_PAD_MCASP5_FSX	AB9	mcasp5_fsx	mcasp5_fsr	spi4_d1	uart9_txd	i2c5_scl		vout2_d21		vin4a_d21	vin5a_d10			pr2_pru1_gpi2	pr2_pru1_gpo2		Driver off
0x174C	CTRL_CORE_PAD_MCASP5_AXR0	AB3	mcasp5_axr0		spi4_d0	uart9_ctsn	uart3_rxd		vout2_d22		vin4a_d22	vin5a_d9		pr2_mdio_mdclk	pr2_pru1_gpi3	pr2_pru1_gpo3		Driver off
0x1750	CTRL_CORE_PAD_MCASP5_AXR1	AA4	mcasp5_axr1		spi4_cs0	uart9_rtsn	uart3_txd		vout2_d23		vin4a_d23	vin5a_d8		pr2_mdio_data	pr2_pru1_gpi4	pr2_pru1_gpo4		Driver off
0x1754	CTRL_CORE_PAD_MMC1_CLK	W6	mmc1_clk														gpio6_21	Driver off
0x1758	CTRL_CORE_PAD_MMC1_CMD	Y6	mmc1_cmd														gpio6_22	Driver off
0x175C	CTRL_CORE_PAD_MMC1_DAT0	AA6	mmc1_dat0														gpio6_23	Driver off
0x1760	CTRL_CORE_PAD_MMC1_DAT1	Y4	mmc1_dat1														gpio6_24	Driver off
0x1764	CTRL_CORE_PAD_MMC1_DAT2	AA5	mmc1_dat2														gpio6_25	Driver off
0x1768	CTRL_CORE_PAD_MMC1_DAT3	Y3	mmc1_dat3														gpio6_26	Driver off
0x176C	CTRL_CORE_PAD_MMC1_SDCD	W7	mmc1_sdcd			uart6_rxd	i2c4_sda										gpio6_27	Driver off
0x1770	CTRL_CORE_PAD_MMC1_SDWP	Y9	mmc1_sdwp			uart6_txd	i2c4_scl										gpio6_28	Driver off
0x1774	CTRL_CORE_PAD_GPIO6_10	AC5	gpio6_10	mdio_mclk	i2c3_sda		vin2b_hsync1					vin5a_clk0	ehrpwm2A	pr2_mii_mt1_clk	pr2_pru0_gpi0	pr2_pru0_gpo0	gpio6_10	Driver off
0x1778	CTRL_CORE_PAD_GPIO6_11	AB4	gpio6_11	mdio_d	i2c3_scl		vin2b_vsync1					vin5a_de0	ehrpwm2B	pr2_mii1_txen	pr2_pru0_gpi1	pr2_pru0_gpo1	gpio6_11	Driver off
0x177C	CTRL_CORE_PAD_MMC3_CLK	AD4	mmc3_clk				vin2b_d7					vin5a_d7	ehrpwm2_tripzone_input	pr2_mii1_txd3	pr2_pru0_gpi2	pr2_pru0_gpo2	gpio6_29	Driver off
0x1780	CTRL_CORE_PAD_MMC3_CMD	AC4	mmc3_cmd	spi3_sclk			vin2b_d6					vin5a_d6	eCAP2_in_PWM2_out	pr2_mii1_txd2	pr2_pru0_gpi3	pr2_pru0_gpo3	gpio6_30	Driver off
0x1784	CTRL_CORE_PAD_MMC3_DAT0	AC7	mmc3_dat0	spi3_d1	uart5_rxd		vin2b_d5					vin5a_d5	eQEP3A_in	pr2_mii1_txd1	pr2_pru0_gpi4	pr2_pru0_gpo4	gpio6_31	Driver off
0x1788	CTRL_CORE_PAD_MMC3_DAT1	AC6	mmc3_dat1	spi3_d0	uart5_txd		vin2b_d4					vin5a_d4	eQEP3B_in	pr2_mii1_txd0	pr2_pru0_gpi5	pr2_pru0_gpo5	gpio7_0	Driver off
0x178C	CTRL_CORE_PAD_MMC3_DAT2	AC9	mmc3_dat2	spi3_cs0	uart5_ctsn		vin2b_d3					vin5a_d3	eQEP3_index	pr2_mii_mr1_clk	pr2_pru0_gpi6	pr2_pru0_gpo6	gpio7_1	Driver off
0x1790	CTRL_CORE_PAD_MMC3_DAT3	AC3	mmc3_dat3	spi3_cs1	uart5_rtsn		vin2b_d2					vin5a_d2	eQEP3_strobe	pr2_mii1_rxdv	pr2_pru0_gpi7	pr2_pru0_gpo7	gpio7_2	Driver off
0x1794	CTRL_CORE_PAD_MMC3_DAT4	AC8	mmc3_dat4	spi4_sclk	uart10_rxd		vin2b_d1					vin5a_d1	ehrpwm3A	pr2_mii1_rxd3	pr2_pru0_gpi8	pr2_pru0_gpo8	gpio1_22	Driver off

Copyright © 2015–2019, Texas Instruments Incorporated

表 4-3. Multiplexing Characteristics (continued)

ADDRESS	REGISTER NAME	BALL NUMBER	MUXMODE FIELD SETTINGS (CTRL_CORE_PAD_*[3:0])															
			0	1	2	3	4	5	6	7	8	9	10	11	12	13	14	15
0x1798	CTRL_CORE_PAD_MMC3_DAT5	AD6	mmc3_dat5	spi4_d1	uart10_txd		vin2b_d0					vin5a_d0	ehrpwm3B	pr2_mii1_rxd2	pr2_pru0_gpi9	pr2_pru0_gpo9	gpio1_23	Driver off
0x179C	CTRL_CORE_PAD_MMC3_DAT6	AB8	mmc3_dat6	spi4_d0	uart10_ctsn		vin2b_de1					vin5a_hsync0	ehrpwm3_tripzone_input	pr2_mii1_rxd1	pr2_pru0_gpi10	pr2_pru0_gpo10	gpio1_24	Driver off
0x17A0	CTRL_CORE_PAD_MMC3_DAT7	AB5	mmc3_dat7	spi4_cs0	uart10_rtsn		vin2b_clk1					vin5a_vsync0	eCAP3_in_PWM3_out	pr2_mii1_rxd0	pr2_pru0_gpi11	pr2_pru0_gpo11	gpio1_25	Driver off
0x17A4	CTRL_CORE_PAD_SPI1_SCLK	A25	spi1_sclk														gpio7_7	Driver off
0x17A8	CTRL_CORE_PAD_SPI1_D1	F16	spi1_d1														gpio7_8	Driver off
0x17AC	CTRL_CORE_PAD_SPI1_D0	B25	spi1_d0														gpio7_9	Driver off
0x17B0	CTRL_CORE_PAD_SPI1_CS0	A24	spi1_cs0														gpio7_10	Driver off
0x17B4	CTRL_CORE_PAD_SPI1_CS1	A22	spi1_cs1		sata1_led	spi2_cs1											gpio7_11	Driver off
0x17B8	CTRL_CORE_PAD_SPI1_CS2	B21	spi1_cs2	uart4_rxd	mmc3_sdcd	spi2_cs2	dcan2_tx	mdio_mclk	hdmi1_hpd								gpio7_12	Driver off
0x17BC	CTRL_CORE_PAD_SPI1_CS3	B20	spi1_cs3	uart4_txd	mmc3_sdwp	spi2_cs3	dcan2_rx	mdio_d	hdmi1_cec								gpio7_13	Driver off
0x17C0	CTRL_CORE_PAD_SPI2_SCLK	A26	spi2_sclk	uart3_rxd													gpio7_14	Driver off
0x17C4	CTRL_CORE_PAD_SPI2_D1	B22	spi2_d1	uart3_txd													gpio7_15	Driver off
0x17C8	CTRL_CORE_PAD_SPI2_D0	G17	spi2_d0	uart3_ctsn	uart5_rxd												gpio7_16	Driver off
0x17CC	CTRL_CORE_PAD_SPI2_CS0	B24	spi2_cs0	uart3_rtsn	uart5_txd												gpio7_17	Driver off
0x17D0	CTRL_CORE_PAD_DCAN1_TX	G20	dcan1_tx		uart8_rxd	mmc2_sdcd			hdmi1_hpd								gpio1_14	Driver off
0x17D4	CTRL_CORE_PAD_DCAN1_RX	G19	dcan1_rx		uart8_txd	mmc2_sdwp	sata1_led		hdmi1_cec								gpio1_15	Driver off
0x17E0	CTRL_CORE_PAD_UART1_RXD	B27	uart1_rxd			mmc4_sdcd											gpio7_22	Driver off
0x17E4	CTRL_CORE_PAD_UART1_TXD	C26	uart1_txd			mmc4_sdwp											gpio7_23	Driver off
0x17E8	CTRL_CORE_PAD_UART1_CTSN	E25	uart1_ctsn		uart9_rxd	mmc4_clk											gpio7_24	Driver off
0x17EC	CTRL_CORE_PAD_UART1_RTSN	C27	uart1_rtsn		uart9_txd	mmc4_cmd											gpio7_25	Driver off
0x17F0	CTRL_CORE_PAD_UART2_RXD	D28		uart3_ctsn	uart3_rctx	mmc4_dat0	uart2_rxd	uart1_dcdn									gpio7_26	Driver off
0x17F4	CTRL_CORE_PAD_UART2_TXD	D26	uart2_txd	uart3_rtsn	uart3_sd	mmc4_dat1	uart2_txd	uart1_dsrn									gpio7_27	Driver off
0x17F8	CTRL_CORE_PAD_UART2_CTSN	D27	uart2_ctsn		uart3_rxd	mmc4_dat2	uart10_rxd	uart1_dtrn									gpio1_16	Driver off

Copyright © 2015–2019, Texas Instruments Incorporated

表 4-3. Multiplexing Characteristics (continued)

ADDRESS	REGISTER NAME	BALL NUMBER	MUXMODE FIELD SETTINGS (CTRL_CORE_PAD_*[3:0])															
			0	1	2	3	4	5	6	7	8	9	10	11	12	13	14	15
0x17FC	CTRL_CORE_PAD_UART2_RTSN	C28	uart2_rtsn	uart3_txd	uart3_irtx	mmc4_dat3	uart10_txd	uart1_rin									gpio1_17	Driver off
0x1800	CTRL_CORE_PAD_I2C1_SDA	C21	i2c1_sda															
0x1804	CTRL_CORE_PAD_I2C1_SCL	C20	i2c1_scl															
0x1808	CTRL_CORE_PAD_I2C2_SDA	C25	i2c2_sda	hdmi1_ddc_scl														Driver off
0x180C	CTRL_CORE_PAD_I2C2_SCL	F17	i2c2_scl	hdmi1_ddc_sda														Driver off
0x1818	CTRL_CORE_PAD_WAKEUP0	AD17	Wakeup0	dcan1_rx													gpio1_0	Driver off
0x181C	CTRL_CORE_PAD_WAKEUP1	AC17	Wakeup1	dcan2_rx													gpio1_1	Driver off
0x1820	CTRL_CORE_PAD_WAKEUP2	AB16	Wakeup2	sys_nirq2													gpio1_2	Driver off
0x1824	CTRL_CORE_PAD_WAKEUP3	AC16	Wakeup3	sys_nirq1													gpio1_3	Driver off
0x1828	CTRL_CORE_PAD_ON_OFF	Y11	on_off															
0x182C	CTRL_CORE_PAD_RTC_PORZ	AB17	rtc_porz															
0x1830	CTRL_CORE_PAD_TMS	F18	tms															
0x1834	CTRL_CORE_PAD_TDI	D23	tdi														gpio8_27	
0x1838	CTRL_CORE_PAD_TDO	F19	tdo														gpio8_28	
0x183C	CTRL_CORE_PAD_TCLK	E20	tclk															
0x1840	CTRL_CORE_PAD_TRSTN	D20	trstn															
0x1844	CTRL_CORE_PAD_RTCK	E18	rtck														gpio8_29	
0x1848	CTRL_CORE_PAD_EMU0	G21	emu0														gpio8_30	
0x184C	CTRL_CORE_PAD_EMU1	D24	emu1														gpio8_31	
0x185C	CTRL_CORE_PAD_RESETN	E23	resetn															
0x1860	CTRL_CORE_PAD_NMIN_DSP	D21	nmin_dsp															
0x1864	CTRL_CORE_PAD_RSTOUTN	F23	rstoutn															

Copyright © 2015–2019, Texas Instruments Incorporated

1. NA in table stands for Not Applicable.

Copyright © 2015–2019, Texas Instruments Incorporated

4.4 Signal Descriptions

Many signals are available on multiple pins, according to the software configuration of the pin multiplexing options.

Texas Instruments has developed an application called Pin Mux Utility that helps a system designer select the appropriate pin-multiplexing configuration for their device-based product design. The Pin Mux Utility provides a way to select valid IO Sets of specific peripheral interfaces to ensure the pinmultiplexing configuration selected for a design only uses valid IO Sets supported by the device.

1. **SIGNAL NAME:** The name of the signal passing through the pin.

   注: The subsystem multiplexing signals are not described in 表 4-2 and 表 4-3.

2. **DESCRIPTION:** Description of the signal
3. **TYPE:** Signal direction and type:
   - I = Input
   - O = Output
   - IO = Input or output
   - D = Open Drain
   - DS = Differential
   - A = Analog
   - PWR = Power
   - GND = Ground
4. **BALL:** Associated ball(s) bottom

   注: For more information, see the Control Module / Control Module Register Manual section of the device TRM.

4.4.1 *Video Input Port (VIP)*

注意

The I/O timings provided in 7, *Timing Requirements and Switching Characteristics* are applicable for all combinations of signals for vin1, vin5 and vin6. However, the timings are valid only for vin2, vin3, and vin4 if signals within a single IOSET are used. The IOSETs are defined in the 表 7-4.

注: For more information, see the Video Input Port (VIP) section of the device TRM.

表 4-4. VIP Signal Descriptions

SIGNAL NAME	DESCRIPTION	TYPE	BALL
Video Input 1			
vin1a_clk0	Video Input 1 Port A Clock input. Input clock for 8-bit 16-bit or 24-bit Port A video capture. Input data is sampled on the CLK0 edge.	I	AG8
vin1a_de0	Video Input 1 Data Enable input	I	AD9
vin1a_fld0	Video Input 1 Port A Field ID input	I	AF9
vin1a_hsync0	Video Input 1 Port A Horizontal Sync input	I	AE9
vin1a_vsync0	Video Input 1 Port A Vertical Sync input	I	AF8
vin1a_d0	Video Input 1 Port A Data input	I	AE8
vin1a_d1	Video Input 1 Port A Data input	I	AD8
vin1a_d2	Video Input 1 Port A Data input	I	AG7

表 4-4. VIP Signal Descriptions (continued)

SIGNAL NAME	DESCRIPTION	TYPE	BALL
vin1a_d3	Video Input 1 Port A Data input	I	AH6
vin1a_d4	Video Input 1 Port A Data input	I	AH3
vin1a_d5	Video Input 1 Port A Data input	I	AH5
vin1a_d6	Video Input 1 Port A Data input	I	AG6
vin1a_d7	Video Input 1 Port A Data input	I	AH4
vin1a_d8	Video Input 1 Port A Data input	I	AG4
vin1a_d9	Video Input 1 Port A Data input	I	AG2
vin1a_d10	Video Input 1 Port A Data input	I	AG3
vin1a_d11	Video Input 1 Port A Data input	I	AG5
vin1a_d12	Video Input 1 Port A Data input	I	AF2
vin1a_d13	Video Input 1 Port A Data input	I	AF6
vin1a_d14	Video Input 1 Port A Data input	I	AF3
vin1a_d15	Video Input 1 Port A Data input	I	AF4
vin1a_d16	Video Input 1 Port A Data input	I	AF1
vin1a_d17	Video Input 1 Port A Data input	I	AE3
vin1a_d18	Video Input 1 Port A Data input	I	AE5
vin1a_d19	Video Input 1 Port A Data input	I	AE1
vin1a_d20	Video Input 1 Port A Data input	I	AE2
vin1a_d21	Video Input 1 Port A Data input	I	AE6
vin1a_d22	Video Input 1 Port A Data input	I	AD2
vin1a_d23	Video Input 1 Port A Data input	I	AD3
vin1b_hsync1	Video Input 1 Port B Horizontal Sync input	I	N6 / AD9
vin1b_vsync1	Video Input 1 Port B Vertical Sync input	I	AF9
vin1b_fld1	Video Input 1 Port B Field ID input	I	AE9
vin1b_de1	Video Input 1 Port B Data Enable input	I	AF8 / M4
vin1b_clk1	Video Input 1 Port B Clock input	I	AH7
vin1b_d0	Video Input 1 Port B Data input	I	AF4 / AD3
vin1b_d1	Video Input 1 Port B Data input	I	AF3 / AD2
vin1b_d2	Video Input 1 Port B Data input	I	AF6 / AE6
vin1b_d3	Video Input 1 Port B Data input	I	AF2 / AE2
vin1b_d4	Video Input 1 Port B Data input	I	AG5 / AE1
vin1b_d5	Video Input 1 Port B Data input	I	AG3 / AE5
vin1b_d6	Video Input 1 Port B Data input	I	AG2 / AE3
vin1b_d7	Video Input 1 Port B Data input	I	AG4 / AF1
Video Input 2			
vin2a_clk0	Video Input 2 Port A Clock input.	I	E1 / V1
vin2a_de0	Video Input 2 Port A Data Enable input	I	G2 / V7
vin2a_fld0	Video Input 2 Port A Field ID input	I	H7 / G2 / W2
vin2a_hsync0	Video Input 2 Port A Horizontal Sync input	I	G1 / U7
vin2a_vsync0	Video Input 2 Port A Vertical Sync input	I	G6 / V6
vin2a_d0	Video Input 2 Port A Data input	I	F2 / U4
vin2a_d1	Video Input 2 Port A Data input	I	F3 / V2
vin2a_d2	Video Input 2 Port A Data input	I	D1 / Y1
vin2a_d3	Video Input 2 Port A Data input	I	E2 / W9
vin2a_d4	Video Input 2 Port A Data input	I	D2 / V9
vin2a_d5	Video Input 2 Port A Data input	I	F4 / U5
vin2a_d6	Video Input 2 Port A Data input	I	C1 / V5

Copyright © 2015–2019, Texas Instruments Incorporated

表 4-4. VIP Signal Descriptions (continued)

SIGNAL NAME	DESCRIPTION	TYPE	BALL
vin2a_d7	Video Input 2 Port A Data input	I	E4 / V4
vin2a_d8	Video Input 2 Port A Data input	I	F5 / V3
vin2a_d9	Video Input 2 Port A Data input	I	E6 / Y2
vin2a_d10	Video Input 2 Port A Data input	I	D3 / U6
vin2a_d11	Video Input 2 Port A Data input	I	F6 / U3
vin2a_d12	Video Input 2 Port A Data input	I	D5
vin2a_d13	Video Input 2 Port A Data input	I	C2
vin2a_d14	Video Input 2 Port A Data input	I	C3
vin2a_d15	Video Input 2 Port A Data input	I	C4
vin2a_d16	Video Input 2 Port A Data input	I	B2
vin2a_d17	Video Input 2 Port A Data input	I	D6
vin2a_d18	Video Input 2 Port A Data input	I	C5
vin2a_d19	Video Input 2 Port A Data input	I	A3
vin2a_d20	Video Input 2 Port A Data input	I	B3
vin2a_d21	Video Input 2 Port A Data input	I	B4
vin2a_d22	Video Input 2 Port A Data input	I	B5
vin2a_d23	Video Input 2 Port A Data input	I	A4
vin2b_clk1	Video Input 2 Port B Clock input	I	AB5 / H7
vin2b_de1	Video Input 2 Port B Data Enable input	I	AB8 / G2
vin2b_fld1	Video Input 2 Port B Field ID input	I	G2
vin2b_hsync1	Video Input 2 Port B Horizontal Sync input	I	AC5 / G1
vin2b_vsync1	Video Input 2 Port B Vertical Sync input	I	AB4 / G6
vin2b_d0	Video Input 2 Port B Data input	I	AD6 / A4
vin2b_d1	Video Input 2 Port B Data input	I	AC8 / B5
vin2b_d2	Video Input 2 Port B Data input	I	AC3 / B4
vin2b_d3	Video Input 2 Port B Data input	I	AC9 / B3
vin2b_d4	Video Input 2 Port B Data input	I	AC6 / A3
vin2b_d5	Video Input 2 Port B Data input	I	AC7 / C5
vin2b_d6	Video Input 2 Port B Data input	I	AC4 / D6
vin2b_d7	Video Input 2 Port B Data input	I	AD4 / B2
Video Input 3			
vin3a_clk0	Video Input 3 Port A Clock input	I	B11 / AH7 / P1
vin3a_de0	Video Input 3 Port A Data Enable input	I	N9 / B3 / B10
vin3a_fld0	Video Input 3 Port A Field ID input	I	P9 / B4 / D11
vin3a_hsync0	Video Input 3 Port A Horizontal Sync input	I	N7 / B5 / C11
vin3a_vsync0	Video Input 3 Port A Vertical Sync input	I	R4 / A4 / E11
vin3a_d0	Video Input 3 Port A Data input	I	M6 / AF1 / B7
vin3a_d1	Video Input 3 Port A Data input	I	M2 / AE3 / B8
vin3a_d2	Video Input 3 Port A Data input	I	L5 / AE5 / A7
vin3a_d3	Video Input 3 Port A Data input	I	M1 / AE1 / A8
vin3a_d4	Video Input 3 Port A Data input	I	L6 / AE2 / C9
vin3a_d5	Video Input 3 Port A Data input	I	L4 / AE6 / A9
vin3a_d6	Video Input 3 Port A Data input	I	L3 / AD2 / B9
vin3a_d7	Video Input 3 Port A Data input	I	L2 / AD3 / A10
vin3a_d8	Video Input 3 Port A Data input	I	L1 / B2 / E8
vin3a_d9	Video Input 3 Port A Data input	I	K2 / D6 / D9
vin3a_d10	Video Input 3 Port A Data input	I	J1 / C5 / D7

Copyright © 2015–2019, Texas Instruments Incorporated

表 4-4. VIP Signal Descriptions (continued)

SIGNAL NAME	DESCRIPTION	TYPE	BALL
vin3a_d11	Video Input 3 Port A Data input	I	J2 / A3 / D8
vin3a_d12	Video Input 3 Port A Data input	I	H1 / B3 / A5
vin3a_d13	Video Input 3 Port A Data input	I	J3 / B4 / C6
vin3a_d14	Video Input 3 Port A Data input	I	H2 / B5 / C8
vin3a_d15	Video Input 3 Port A Data input	I	H3 / A4 / C7
vin3a_d16	Video Input 3 Port A Data input	I	R6 / F11
vin3a_d17	Video Input 3 Port A Data input	I	T9 / G10
vin3a_d18	Video Input 3 Port A Data input	I	T6 / F10
vin3a_d19	Video Input 3 Port A Data input	I	T7 / G11
vin3a_d20	Video Input 3 Port A Data input	I	P6 / E9
vin3a_d21	Video Input 3 Port A Data input	I	R9 / F9
vin3a_d22	Video Input 3 Port A Data input	I	R5 / F8
vin3a_d23	Video Input 3 Port A Data input	I	P5 / E7
vin3b_clk1	Video Input 3 Port B Clock input	I	P7 / M4
vin3b_de1	Video Input 3 Port B Data Enable input	I	N6
vin3b_fld1	Video Input 3 Port A Field ID input	I	M4
vin3b_hsync1	Video Input 3 Port A Horizontal Sync input	I	H5
vin3b_vsync1	Video Input 3 Port A Vertical Sync input	I	H6
vin3b_d0	Video Input 3 Port B Data input	I	K7
vin3b_d1	Video Input 3 Port B Data input	I	M7
vin3b_d2	Video Input 3 Port B Data input	I	J5
vin3b_d3	Video Input 3 Port B Data input	I	K6
vin3b_d4	Video Input 3 Port B Data input	I	J7
vin3b_d5	Video Input 3 Port B Data input	I	J4
vin3b_d6	Video Input 3 Port B Data input	I	J6
vin3b_d7	Video Input 3 Port B Data input	I	H4
Video Input 4			
vin4a_clk0	Video Input 4 Port A Clock input	I	P4 / B26 / B11
vin4a_de0	Video Input 4 Port A Data Enable input	I	H6 / C23 / B10 / P7
vin4a_fld0	Video Input 4 Port A Field ID input	I	J7 / F21 / P9 / D11
vin4a_hsync0	Video Input 4 Port A Horizontal Sync input	I	R3 / E21 / C11 / P7
vin4a_vsync0	Video Input 4 Port A Vertical Sync input	I	T2 / F20 / E11 / N1
vin4a_d0	Video Input 4 Port A Data input	I	R6 / B7 / B14
vin4a_d1	Video Input 4 Port A Data input	I	T9 / B8 / J14
vin4a_d2	Video Input 4 Port A Data input	I	T6 / A7 / G13
vin4a_d3	Video Input 4 Port A Data input	I	T7 / A8 / J11
vin4a_d4	Video Input 4 Port A Data input	I	P6 / C9 / E12
vin4a_d5	Video Input 4 Port A Data input	I	R9 / A9 / F13
vin4a_d6	Video Input 4 Port A Data input	I	R5 / B9 / C12
vin4a_d7	Video Input 4 Port A Data input	I	P5 / A10 / D12
vin4a_d8	Video Input 4 Port A Data input	I	E8 / U2 / E15
vin4a_d9	Video Input 4 Port A Data input	I	D9 / U1 / A20
vin4a_d10	Video Input 4 Port A Data input	I	D7 / P3 / B15
vin4a_d11	Video Input 4 Port A Data input	I	D8 / R2 / A15
vin4a_d12	Video Input 4 Port A Data input	I	A5 / K7 / D15
vin4a_d13	Video Input 4 Port A Data input	I	C6 / M7 / B16
vin4a_d14	Video Input 4 Port A Data input	I	C8 / J5 / B17

Copyright © 2015–2019, Texas Instruments Incorporated

表 4-4. VIP Signal Descriptions (continued)

SIGNAL NAME	DESCRIPTION	TYPE	BALL
vin4a_d15	Video Input 4 Port A Data input	I	C7 / K6 / A17
vin4a_d16	Video Input 4 Port A Data input	I	C18 / F11
vin4a_d17	Video Input 4 Port A Data input	I	A21 / G10
vin4a_d18	Video Input 4 Port A Data input	I	G16 / F10
vin4a_d19	Video Input 4 Port A Data input	I	D17 / G11
vin4a_d20	Video Input 4 Port A Data input	I	AA3 / E9
vin4a_d21	Video Input 4 Port A Data input	I	AB9 / F9
vin4a_d22	Video Input 4 Port A Data input	I	AB3 / F8
vin4a_d23	Video Input 4 Port A Data input	I	AA4 / E7
vin4b_clk1	Video Input 4 Port B Clock input	I	N9 / V1
vin4b_de1	Video Input 4 Port B Data Enable input	I	P9 / V7
vin4b_fld1	Video Input 4 Port B Field ID input	I	P4 / W2
vin4b_hsync1	Video Input 4 Port B Horizontal Sync input	I	N7 / U7
vin4b_vsync1	Video Input 4 Port B Vertical Sync input	I	R4 / V6
vin4b_d0	Video Input 4 Port B Data input	I	R6 / U4
vin4b_d1	Video Input 4 Port B Data input	I	T9 / V2
vin4b_d2	Video Input 4 Port B Data input	I	T6 / Y1
vin4b_d3	Video Input 4 Port B Data input	I	T7 / W9
vin4b_d4	Video Input 4 Port B Data input	I	P6 / V9
vin4b_d5	Video Input 4 Port B Data input	I	R9 / U5
vin4b_d6	Video Input 4 Port B Data input	I	R5 / V5
vin4b_d7	Video Input 4 Port B Data input	I	P5 / V4
Video Input 5			
vin5a_clk0	Video Input 5 Port A Clock input	I	AC5
vin5a_de0	Video Input 5 Port A Data Enable input	I	AB4
vin5a_fld0	Video Input 5 Port A Field ID input	I	C17
vin5a_hsync0	Video Input 5 Port A Horizontal Sync input	I	AB8
vin5a_vsync0	Video Input 5 Port A Vertical Sync input	I	AB5
vin5a_d0	Video Input 5 Port A Data input	I	AD6
vin5a_d1	Video Input 5 Port A Data input	I	AC8
vin5a_d2	Video Input 5 Port A Data input	I	AC3
vin5a_d3	Video Input 5 Port A Data input	I	AC9
vin5a_d4	Video Input 5 Port A Data input	I	AC6
vin5a_d5	Video Input 5 Port A Data input	I	AC7
vin5a_d6	Video Input 5 Port A Data input	I	AC4
vin5a_d7	Video Input 5 Port A Data input	I	AD4
vin5a_d8	Video Input 5 Port A Data input	I	AA4
vin5a_d9	Video Input 5 Port A Data input	I	AB3
vin5a_d10	Video Input 5 Port A Data input	I	AB9
vin5a_d11	Video Input 5 Port A Data input	I	AA3
vin5a_d12	Video Input 5 Port A Data input	I	D17
vin5a_d13	Video Input 5 Port A Data input	I	G16
vin5a_d14	Video Input 5 Port A Data input	I	A21
vin5a_d15	Video Input 5 Port A Data input	I	C18
Video Input 6			
vin6a_clk0	Video Input 6 Port A Clock input	I	E17
vin6a_de0	Video Input 6 Port B Data Enable input	I	D14

Copyright © 2015–2019, Texas Instruments Incorporated

表 4-4. VIP Signal Descriptions (continued)

SIGNAL NAME	DESCRIPTION	TYPE	BALL
vin6a_fld0	Video Input 6 Port A Field ID input	I	C14
vin6a_hsync0	Video Input 6 Port A Horizontal Sync input	I	F12
vin6a_vsync0	Video Input 6 Port A Vertical Sync input	I	G12
vin6a_d0	Video Input 6 Port A Data input	I	C17 / D18
vin6a_d1	Video Input 6 Port A Data input	I	B19
vin6a_d2	Video Input 6 Port A Data input	I	F15
vin6a_d3	Video Input 6 Port A Data input	I	B18
vin6a_d4	Video Input 6 Port A Data input	I	A16
vin6a_d5	Video Input 6 Port A Data input	I	C15
vin6a_d6	Video Input 6 Port A Data input	I	A18
vin6a_d7	Video Input 6 Port A Data input	I	A19
vin6a_d8	Video Input 6 Port A Data input	I	F14
vin6a_d9	Video Input 6 Port A Data input	I	G14
vin6a_d10	Video Input 6 Port A Data input	I	A13
vin6a_d11	Video Input 6 Port A Data input	I	E14
vin6a_d12	Video Input 6 Port A Data input	I	A12
vin6a_d13	Video Input 6 Port A Data input	I	B13
vin6a_d14	Video Input 6 Port A Data input	I	A11
vin6a_d15	Video Input 6 Port A Data input	I	B12

4.4.2 Display Subsystem – Video Output Ports

注意

The I/O timings provided in 7, *Timing Requirements and Switching Characteristics* are valid only if signals within a single IOSET are used. The IOSETs are defined in the 表 7-19 and 表 7-20.

表 4-5. DSS Signal Descriptions

SIGNAL NAME	DESCRIPTION	TYPE	BALL
DPI Video Output 1			
vout1_clk	Video Output 1 Clock output	O	D11
vout1_de	Video Output 1 Data Enable output	O	B10
vout1_fld	Video Output 1 Field ID output.This signal is not used for embedded sync modes.	O	B11
vout1_hsync	Video Output 1 Horizontal Sync output.This signal is not used for embedded sync modes.	O	C11
vout1_vsync	Video Output 1 Vertical Sync output.This signal is not used for embedded sync modes.	O	E11
vout1_d0	Video Output 1 Data output	O	F11
vout1_d1	Video Output 1 Data output	O	G10
vout1_d2	Video Output 1 Data output	O	F10
vout1_d3	Video Output 1 Data output	O	G11
vout1_d4	Video Output 1 Data output	O	E9
vout1_d5	Video Output 1 Data output	O	F9
vout1_d6	Video Output 1 Data output	O	F8
vout1_d7	Video Output 1 Data output	O	E7
vout1_d8	Video Output 1 Data output	O	E8
vout1_d9	Video Output 1 Data output	O	D9

Copyright © 2015–2019, Texas Instruments Incorporated

表 4-5. DSS Signal Descriptions (continued)

SIGNAL NAME	DESCRIPTION	TYPE	BALL
vout1_d10	Video Output 1 Data output	O	D7
vout1_d11	Video Output 1 Data output	O	D8
vout1_d12	Video Output 1 Data output	O	A5
vout1_d13	Video Output 1 Data output	O	C6
vout1_d14	Video Output 1 Data output	O	C8
vout1_d15	Video Output 1 Data output	O	C7
vout1_d16	Video Output 1 Data output	O	B7
vout1_d17	Video Output 1 Data output	O	B8
vout1_d18	Video Output 1 Data output	O	A7
vout1_d19	Video Output 1 Data output	O	A8
vout1_d20	Video Output 1 Data output	O	C9
vout1_d21	Video Output 1 Data output	O	A9
vout1_d22	Video Output 1 Data output	O	B9
vout1_d23	Video Output 1 Data output	O	A10
DPI Video Output 2			
vout2_clk	Video Output 2 Clock output	O	H7/ B26
vout2_de	Video Output 2 Data Enable output	O	G2/ C23
vout2_fld	Video Output 2 Field ID output.This signal is not used for embedded sync modes.	O	E1/ F21
vout2_hsync	Video Output 2 Horizontal Sync output.This signal is not used for embedded sync modes.	O	G1/ E21
vout2_vsync	Video Output 2 Vertical Sync output.This signal is not used for embedded sync modes.	O	G6/ F20
vout2_d0	Video Output 2 Data output	O	A4/ B14
vout2_d1	Video Output 2 Data output	O	B5/ J14
vout2_d2	Video Output 2 Data output	O	B4/ G13
vout2_d3	Video Output 2 Data output	O	B3/ J11
vout2_d4	Video Output 2 Data output	O	A3/ E12
vout2_d5	Video Output 2 Data output	O	C5/ F13
vout2_d6	Video Output 2 Data output	O	D6/ C12
vout2_d7	Video Output 2 Data output	O	B2/ D12
vout2_d8	Video Output 2 Data output	O	C4/ E15
vout2_d9	Video Output 2 Data output	O	C3/ A20
vout2_d10	Video Output 2 Data output	O	C2/ B15
vout2_d11	Video Output 2 Data output	O	D5/ A15
vout2_d12	Video Output 2 Data output	O	F6/ D15
vout2_d13	Video Output 2 Data output	O	D3/ B16
vout2_d14	Video Output 2 Data output	O	E6/ B17
vout2_d15	Video Output 2 Data output	O	F5/ A17
vout2_d16	Video Output 2 Data output	O	E4/ C18
vout2_d17	Video Output 2 Data output	O	C1/ A21
vout2_d18	Video Output 2 Data output	O	F4/ G16
vout2_d19	Video Output 2 Data output	O	D2/ D17
vout2_d20	Video Output 2 Data output	O	E2/ AA3
vout2_d21	Video Output 2 Data output	O	D1/ AB9
vout2_d22	Video Output 2 Data output	O	F3/ AB3
vout2_d23	Video Output 2 Data output	O	F2/ AA4
DPI Video Output 3			
vout3_clk	Video Output 3 Clock output	O	P1/ AF9 (1)
vout3_de	Video Output 3 Data Enable output	O	N9/ AD9 (1)

表 4-5. DSS Signal Descriptions (continued)

SIGNAL NAME	DESCRIPTION	TYPE	BALL
vout3_fld	Video Output 3 Field ID output.This signal is not used for embedded sync modes.	O	P9/ AG8 (1)
vout3_hsync	Video Output 3 Horizontal Sync output.This signal is not used for embedded sync modes.	O	N7/ AE9 (1)
vout3_vsync	Video Output 3 Vertical Sync output.This signal is not used for embedded sync modes.	O	R4/ AF8 (1)
vout3_d0	Video Output 3 Data output	O	M6/ AH4 (1)/ AD3 (1)
vout3_d1	Video Output 3 Data output	O	M2/ AG6 (1)/ AD2 (1)
vout3_d2	Video Output 3 Data output	O	L5/ AH5 (1)/ AE6 (1)
vout3_d3	Video Output 3 Data output	O	M1/ AH3 (1)/ AE2 (1)
vout3_d4	Video Output 3 Data output	O	L6/ AH6 (1)/ AE1 (1)
vout3_d5	Video Output 3 Data output	O	L4/ AG7 (1)/ AE5 (1)
vout3_d6	Video Output 3 Data output	O	L3/ AD8 (1)/ AE3 (1)
vout3_d7	Video Output 3 Data output	O	L2/ AE8 (1)/ AF1 (1)
vout3_d8	Video Output 3 Data output	O	L1/ AF4 (1)
vout3_d9	Video Output 3 Data output	O	K2/ AF3 (1)
vout3_d10	Video Output 3 Data output	O	J1/ AF6 (1)
vout3_d11	Video Output 3 Data output	O	J2/ AF2 (1)
vout3_d12	Video Output 3 Data output	O	H1/ AG5 (1)
vout3_d13	Video Output 3 Data output	O	J3/ AG3 (1)
vout3_d14	Video Output 3 Data output	O	H2/ AG2 (1)
vout3_d15	Video Output 3 Data output	O	H3/ AG4 (1)
vout3_d16	Video Output 3 Data output	O	R6/ AG8 (1)/ AH4 (1)
vout3_d17	Video Output 3 Data output	O	T9/ AD9 (1)/ AG6 (1)
vout3_d18	Video Output 3 Data output	O	T6/ AH5 (1)
vout3_d19	Video Output 3 Data output	O	T7/ AH3 (1)
vout3_d20	Video Output 3 Data output	O	P6/ AH6 (1)
vout3_d21	Video Output 3 Data output	O	R9/ AG7 (1)
vout3_d22	Video Output 3 Data output	O	R5/ AD8 (1)
vout3_d23	Video Output 3 Data output	O	P5/ AE8 (1)

(1) The VOUT3 interface when multiplexed onto balls mapped to the VDDSHV6 supply rail is restricted to operating in 1.8V mode only (VDDSHV6 must be supplied with 1.8V). 3.3V mode is not supported. This must be considered in the pin mux programming and VDDSHVx supply connections.

4.4.3 Display Subsystem – High-Definition Multimedia Interface (HDMI)

注: For more information, see the Display Subsystem / Display Subsystem Overview of the device TRM.

表 4-6. HDMI Signal Descriptions

SIGNAL NAME	DESCRIPTION	TYPE	BALL
hdmi1_cec	HDMI consumer electronic control	IOD	B20/ G19
hdmi1_hpd	HDMI display hot plug detect	I	B21/ G20
hdmi1_ddc_scl	HDMI display data channel clock	IOD	C25
hdmi1_ddc_sda	HDMI display data channel data	IOD	F17
hdmi1_clockx	HDMI clock differential positive or negative	ODS	AG16

Copyright © 2015–2019, Texas Instruments Incorporated

表 4-6. HDMI Signal Descriptions (continued)

SIGNAL NAME	DESCRIPTION	TYPE	BALL
hdmi1_clocky	HDMI clock differential positive or negative	ODS	AH16
hdmi1_data2x	HDMI data 2 differential positive or negative	ODS	AG19
hdmi1_data2y	HDMI data 2 differential positive or negative	ODS	AH19
hdmi1_data1x	HDMI data 1 differential positive or negative	ODS	AG18
hdmi1_data1y	HDMI data 1 differential positive or negative	ODS	AH18
hdmi1_data0x	HDMI data 0 differential positive or negative	ODS	AG17
hdmi1_data0y	HDMI data 0 differential positive or negative	ODS	AH17

4.4.4 External Memory Interface - (EMIF)

注: For more information, see the Memory Subsystem / EMIF Controller section of the device TRM.

表 4-7. EMIF Signal Descriptions

SIGNAL NAME	DESCRIPTION	TYPE	BALL
EMIF Channel 1			
ddr1_csn0	EMIF1 Chip Select 0	O	AH23
ddr1_cke	EMIF1 Clock Enable	O	AG22
ddr1_ck	EMIF1 Clock	O	AG24
ddr1_nck	EMIF1 Negative Clock	O	AH24
ddr1_odt0	EMIF1 On-Die Termination for Chip Select 0	O	AE20
ddr1_casn	EMIF1 Column Address Strobe	O	AC18
ddr1_rasn	EMIF1 Row Address Strobe	O	AF20
ddr1_wen	EMIF1 Write Enable	O	AH21
ddr1_rst	EMIF1 Reset output (DDR3-SDRAM only)	O	AG21
ddr1_ba0	EMIF1 Bank Address	O	AF17
ddr1_ba1	EMIF1 Bank Address	O	AE18
ddr1_ba2	EMIF1 Bank Address	O	AB18
ddr1_a0	EMIF1 Address Bus	O	AD20
ddr1_a1	EMIF1 Address Bus	O	AC19
ddr1_a2	EMIF1 Address Bus	O	AC20
ddr1_a3	EMIF1 Address Bus	O	AB19
ddr1_a4	EMIF1 Address Bus	O	AF21
ddr1_a5	EMIF1 Address Bus	O	AH22
ddr1_a6	EMIF1 Address Bus	O	AG23
ddr1_a7	EMIF1 Address Bus	O	AE21
ddr1_a8	EMIF1 Address Bus	O	AF22
ddr1_a9	EMIF1 Address Bus	O	AE22
ddr1_a10	EMIF1 Address Bus	O	AD21
ddr1_a11	EMIF1 Address Bus	O	AD22
ddr1_a12	EMIF1 Address Bus	O	AC21
ddr1_a13	EMIF1 Address Bus	O	AF18
ddr1_a14	EMIF1 Address Bus	O	AE17
ddr1_a15	EMIF1 Address Bus	O	AD18
ddr1_d0	EMIF1 Data Bus	IO	AF25
ddr1_d1	EMIF1 Data Bus	IO	AF26

表 4-7. EMIF Signal Descriptions (continued)

SIGNAL NAME	DESCRIPTION	TYPE	BALL
ddr1_d2	EMIF1 Data Bus	IO	AG26
ddr1_d3	EMIF1 Data Bus	IO	AH26
ddr1_d4	EMIF1 Data Bus	IO	AF24
ddr1_d5	EMIF1 Data Bus	IO	AE24
ddr1_d6	EMIF1 Data Bus	IO	AF23
ddr1_d7	EMIF1 Data Bus	IO	AE23
ddr1_d8	EMIF1 Data Bus	IO	AC23
ddr1_d9	EMIF1 Data Bus	IO	AF27
ddr1_d10	EMIF1 Data Bus	IO	AG27
ddr1_d11	EMIF1 Data Bus	IO	AF28
ddr1_d12	EMIF1 Data Bus	IO	AE26
ddr1_d13	EMIF1 Data Bus	IO	AC25
ddr1_d14	EMIF1 Data Bus	IO	AC24
ddr1_d15	EMIF1 Data Bus	IO	AD25
ddr1_d16	EMIF1 Data Bus	IO	V20
ddr1_d17	EMIF1 Data Bus	IO	W20
ddr1_d18	EMIF1 Data Bus	IO	AB28
ddr1_d19	EMIF1 Data Bus	IO	AC28
ddr1_d20	EMIF1 Data Bus	IO	AC27
ddr1_d21	EMIF1 Data Bus	IO	Y19
ddr1_d22	EMIF1 Data Bus	IO	AB27
ddr1_d23	EMIF1 Data Bus	IO	Y20
ddr1_d24	EMIF1 Data Bus	IO	AA23
ddr1_d25	EMIF1 Data Bus	IO	Y22
ddr1_d26	EMIF1 Data Bus	IO	Y23
ddr1_d27	EMIF1 Data Bus	IO	AA24
ddr1_d28	EMIF1 Data Bus	IO	Y24
ddr1_d29	EMIF1 Data Bus	IO	AA26
ddr1_d30	EMIF1 Data Bus	IO	AA25
ddr1_d31	EMIF1 Data Bus	IO	AA28
ddr1_ecc_d0	EMIF1 ECC Data Bus	IO	W22
ddr1_ecc_d1	EMIF1 ECC Data Bus	IO	V23
ddr1_ecc_d2	EMIF1 ECC Data Bus	IO	W19
ddr1_ecc_d3	EMIF1 ECC Data Bus	IO	W23
ddr1_ecc_d4	EMIF1 ECC Data Bus	IO	Y25
ddr1_ecc_d5	EMIF1 ECC Data Bus	IO	V24
ddr1_ecc_d6	EMIF1 ECC Data Bus	IO	V25
ddr1_ecc_d7	EMIF1 ECC Data Bus	IO	Y26
ddr1_dqm0	EMIF1 Data Mask	O	AD23
ddr1_dqm1	EMIF1 Data Mask	O	AB23
ddr1_dqm2	EMIF1 Data Mask	O	AC26
ddr1_dqm3	EMIF1 Data Mask	O	AA27
ddr1_dqm_ecc	EMIF1 ECC Data Mask	O	V26
ddr1_dqs0	Data strobe 0 input/output for byte 0 of the 32-bit data bus. This signal is output to the EMIF1 memory when writing and input when reading.	IO	AH25
ddr1_dqsn0	Data strobe 0 invert	IO	AG25
ddr1_dqs1	Data strobe 1 input/output for byte 1 of the 32-bit data bus. This signal is output to the EMIF1 memory when writing and input when reading.	IO	AE27

Copyright © 2015–2019, Texas Instruments Incorporated

表 4-7. EMIF Signal Descriptions (continued)

SIGNAL NAME	DESCRIPTION	TYPE	BALL
ddr1_dqsn1	Data strobe 1 invert	IO	AE28
ddr1_dqs2	Data strobe 2 input/output for byte 2 of the 32-bit data bus. This signal is output to the EMIF1 memory when writing and input when reading.	IO	AD27
ddr1_dqsn2	Data strobe 2 invert	IO	AD28
ddr1_dqs3	Data strobe 3 input/output for byte 3 of the 32-bit data bus. This signal is output to the EMIF1 memory when writing and input when reading.	IO	Y28
ddr1_dqsn3	Data strobe 3 invert	IO	Y27
ddr1_dqs_ecc	EMIF1 ECC Data strobe input/output. This signal is output to the EMIF1 memory when writing and input when reading.	IO	V27
ddr1_dqsn_ecc	EMIF1 ECC Complementary Data strobe	IO	V28
ddr1_vref0	Reference Power Supply EMIF1	A	Y18
EMIF Channel 2			
ddr2_csn0	EMIF2 Chip Select 0	O	P24
ddr2_cke	EMIF2 Clock Enable	O	U24
ddr2_ck	EMIF2 Clock	O	T28
ddr2_nck	EMIF2 Negative Clock	O	T27
ddr2_odt0	EMIF2 On-Die Termination for Chip Select 0	O	R23
ddr2_casn	EMIF2 Column Address Strobe	O	U28
ddr2_rasn	EMIF2 Row Address Strobe	O	T23
ddr2_wen	EMIF2 Write Enable	O	U25
ddr2_rst	EMIF2 Reset output (DDR3-SDRAM only)	O	R24
ddr2_ba0	EMIF2 Bank Address	O	U23
ddr2_ba1	EMIF2 Bank Address	O	U27
ddr2_ba2	EMIF2 Bank Address	O	U26
ddr2_a0	EMIF2 Address Bus	O	R25
ddr2_a1	EMIF2 Address Bus	O	R26
ddr2_a2	EMIF2 Address Bus	O	R28
ddr2_a3	EMIF2 Address Bus	O	R27
ddr2_a4	EMIF2 Address Bus	O	P23
ddr2_a5	EMIF2 Address Bus	O	P22
ddr2_a6	EMIF2 Address Bus	O	P25
ddr2_a7	EMIF2 Address Bus	O	N20
ddr2_a8	EMIF2 Address Bus	O	P27
ddr2_a9	EMIF2 Address Bus	O	N27
ddr2_a10	EMIF2 Address Bus	O	N23
ddr2_a11	EMIF2 Address Bus	O	P26
ddr2_a12	EMIF2 Address Bus	O	N28
ddr2_a13	EMIF2 Address Bus	O	T22
ddr2_a14	EMIF2 Address Bus	O	R22
ddr2_a15	EMIF2 Address Bus	O	U22
ddr2_d0	EMIF2 Data Bus	IO	E26
ddr2_d1	EMIF2 Data Bus	IO	G25
ddr2_d2	EMIF2 Data Bus	IO	F25
ddr2_d3	EMIF2 Data Bus	IO	F24
ddr2_d4	EMIF2 Data Bus	IO	F26
ddr2_d5	EMIF2 Data Bus	IO	F27
ddr2_d6	EMIF2 Data Bus	IO	E27
ddr2_d7	EMIF2 Data Bus	IO	E28

Copyright © 2015–2019, Texas Instruments Incorporated

表 4-7. EMIF Signal Descriptions (continued)

SIGNAL NAME	DESCRIPTION	TYPE	BALL
ddr2_d8	EMIF2 Data Bus	IO	H23
ddr2_d9	EMIF2 Data Bus	IO	H25
ddr2_d10	EMIF2 Data Bus	IO	H24
ddr2_d11	EMIF2 Data Bus	IO	H26
ddr2_d12	EMIF2 Data Bus	IO	G26
ddr2_d13	EMIF2 Data Bus	IO	J25
ddr2_d14	EMIF2 Data Bus	IO	J26
ddr2_d15	EMIF2 Data Bus	IO	J24
ddr2_d16	EMIF2 Data Bus	IO	L22
ddr2_d17	EMIF2 Data Bus	IO	K20
ddr2_d18	EMIF2 Data Bus	IO	K21
ddr2_d19	EMIF2 Data Bus	IO	L23
ddr2_d20	EMIF2 Data Bus	IO	L24
ddr2_d21	EMIF2 Data Bus	IO	J23
ddr2_d22	EMIF2 Data Bus	IO	K22
ddr2_d23	EMIF2 Data Bus	IO	J20
ddr2_d24	EMIF2 Data Bus	IO	L27
ddr2_d25	EMIF2 Data Bus	IO	L26
ddr2_d26	EMIF2 Data Bus	IO	L25
ddr2_d27	EMIF2 Data Bus	IO	L28
ddr2_d28	EMIF2 Data Bus	IO	M23
ddr2_d29	EMIF2 Data Bus	IO	M24
ddr2_d30	EMIF2 Data Bus	IO	M25
ddr2_d31	EMIF2 Data Bus	IO	M26
ddr2_dqm0	EMIF2 Data Mask	O	F28
ddr2_dqm1	EMIF2 Data Mask	O	G24
ddr2_dqm2	EMIF2 Data Mask	O	K23
ddr2_dqm3	EMIF2 Data Mask	O	M22
ddr2_dqs0	Data strobe 0 input/output for byte 0 of the 32-bit data bus. This signal is output to the EMIF2 memory when writing and input when reading.	IO	G28
ddr2_dqsn0	Data strobe 0 invert	IO	G27
ddr2_dqs1	Data strobe 1 input/output for byte 1 of the 32-bit data bus. This signal is output to the EMIF2 memory when writing and input when reading.	IO	H27
ddr2_dqsn1	Data strobe 1 invert	IO	H28
ddr2_dqs2	Data strobe 2 input/output for byte 2 of the 32-bit data bus. This signal is output to the EMIF2 memory when writing and input when reading.	IO	K27
ddr2_dqsn2	Data strobe 2 invert	IO	K28
ddr2_dqs3	Data strobe 3 input/output for byte 3 of the 32-bit data bus. This signal is output to the EMIF2 memory when writing and input when reading.	IO	M28
ddr2_dqsn3	Data strobe 3 invert	IO	M27
ddr2_vref0	Reference Power Supply EMIF2	A	N22

Copyright © 2015–2019, Texas Instruments Incorporated

注: The index numbers 1 and 2 which are part of the EMIF1 and EMIF2 signal prefixes (ddr1_* and ddr2_*) listed in 表 4-7, EMIF Signal Descriptions, not to be confused with DDR1 and DDR2 types of SDRAM memories.

4.4.5 General-Purpose Memory Controller (GPMC)

注: For more information, see the Memory Subsystem / General-Purpose Memory Controller section of the device TRM.

表 4-8. GPMC Signal Descriptions

SIGNAL NAME	DESCRIPTION	TYPE	BALL
gpmc_ad0	GPMC Data 0 in A/D nonmultiplexed mode and additionally Address 1 in A/D multiplexed mode	IO	M6
gpmc_ad1	GPMC Data 1 in A/D nonmultiplexed mode and additionally Address 2 in A/D multiplexed mode	IO	M2
gpmc_ad2	GPMC Data 2 in A/D nonmultiplexed mode and additionally Address 3 in A/D multiplexed mode	IO	L5
gpmc_ad3	GPMC Data 3 in A/D nonmultiplexed mode and additionally Address 4 in A/D multiplexed mode	IO	M1
gpmc_ad4	GPMC Data 4 in A/D nonmultiplexed mode and additionally Address 5 in A/D multiplexed mode	IO	L6
gpmc_ad5	GPMC Data 5 in A/D nonmultiplexed mode and additionally Address 6 in A/D multiplexed mode	IO	L4
gpmc_ad6	GPMC Data 6 in A/D nonmultiplexed mode and additionally Address 7 in A/D multiplexed mode	IO	L3
gpmc_ad7	GPMC Data 7 in A/D nonmultiplexed mode and additionally Address 8 in A/D multiplexed mode	IO	L2
gpmc_ad8	GPMC Data 8 in A/D nonmultiplexed mode and additionally Address 9 in A/D multiplexed mode	IO	L1
gpmc_ad9	GPMC Data 9 in A/D nonmultiplexed mode and additionally Address 10 in A/D multiplexed mode	IO	K2
gpmc_ad10	GPMC Data 10 in A/D nonmultiplexed mode and additionally Address 11 in A/D multiplexed mode	IO	J1
gpmc_ad11	GPMC Data 11 in A/D nonmultiplexed mode and additionally Address 12 in A/D multiplexed mode	IO	J2
gpmc_ad12	GPMC Data 12 in A/D nonmultiplexed mode and additionally Address 13 in A/D multiplexed mode	IO	H1
gpmc_ad13	GPMC Data 13 in A/D nonmultiplexed mode and additionally Address 14 in A/D multiplexed mode	IO	J3
gpmc_ad14	GPMC Data 14 in A/D nonmultiplexed mode and additionally Address 15 in A/D multiplexed mode	IO	H2
gpmc_ad15	GPMC Data 15 in A/D nonmultiplexed mode and additionally Address 16 in A/D multiplexed mode	IO	H3
gpmc_a0	GPMC Address 0. Only used to effectively address 8-bit data nonmultiplexed memories	O	R6/ P4
gpmc_a1	GPMC address 1 in A/D nonmultiplexed mode and Address 17 in A/D multiplexed mode	O	T9/ P1
gpmc_a2	GPMC address 2 in A/D nonmultiplexed mode and Address 18 in A/D multiplexed mode	O	T6/ N1
gpmc_a3	GPMC address 3 in A/D nonmultiplexed mode and Address 19 in A/D multiplexed mode	O	T7/ M4
gpmc_a4	GPMC address 4 in A/D nonmultiplexed mode and Address 20 in A/D multiplexed mode	O	P6

表 4-8. GPMC Signal Descriptions (continued)

SIGNAL NAME	DESCRIPTION	TYPE	BALL
gpmc_a5	GPMC address 5 in A/D nonmultiplexed mode and Address 21 in A/D multiplexed mode	O	R9
gpmc_a6	GPMC address 6 in A/D nonmultiplexed mode and Address 22 in A/D multiplexed mode	O	R5
gpmc_a7	GPMC address 7 in A/D nonmultiplexed mode and Address 23 in A/D multiplexed mode	O	P5
gpmc_a8	GPMC address 8 in A/D nonmultiplexed mode and Address 24 in A/D multiplexed mode	O	N7
gpmc_a9	GPMC address 9 in A/D nonmultiplexed mode and Address 25 in A/D multiplexed mode	O	R4
gpmc_a10	GPMC address 10 in A/D nonmultiplexed mode and Address 26 in A/D multiplexed mode	O	N9
gpmc_a11	GPMC address 11 in A/D nonmultiplexed mode and unused in A/D multiplexed mode	O	P9
gpmc_a12	GPMC address 12 in A/D nonmultiplexed mode and unused in A/D multiplexed mode	O	P4
gpmc_a13	GPMC address 13 in A/D nonmultiplexed mode and unused in A/D multiplexed mode	O	R3/ K7
gpmc_a14	GPMC address 14 in A/D nonmultiplexed mode and unused in A/D multiplexed mode	O	T2/ M7
gpmc_a15	GPMC address 15 in A/D nonmultiplexed mode and unused in A/D multiplexed mode	O	U2/ J5
gpmc_a16	GPMC address 16 in A/D nonmultiplexed mode and unused in A/D multiplexed mode	O	U1/ K6
gpmc_a17	GPMC address 17 in A/D nonmultiplexed mode and unused in A/D multiplexed mode	O	P3/ J7
gpmc_a18	GPMC address 18 in A/D nonmultiplexed mode and unused in A/D multiplexed mode	O	R2/ J4
gpmc_a19	GPMC address 19 in A/D nonmultiplexed mode and unused in A/D multiplexed mode	O	K7(3) / J6
gpmc_a20	GPMC address 20 in A/D nonmultiplexed mode and unused in A/D multiplexed mode	O	M7(3) / H4
gpmc_a21	GPMC address 21 in A/D nonmultiplexed mode and unused in A/D multiplexed mode	O	J5(3) / H5
gpmc_a22	GPMC address 22 in A/D nonmultiplexed mode and unused in A/D multiplexed mode	O	K6(3) / H6
gpmc_a23	GPMC address 23 in A/D nonmultiplexed mode and unused in A/D multiplexed mode	O	J7/ AG5/ N1
gpmc_a24	GPMC address 24 in A/D nonmultiplexed mode and unused in A/D multiplexed mode	O	J4(3) / AF2
gpmc_a25	GPMC address 25 in A/D nonmultiplexed mode and unused in A/D multiplexed mode	O	J6(3) / AF6
gpmc_a26	GPMC address 26 in A/D nonmultiplexed mode and unused in A/D multiplexed mode	O	H4(3) / AF3
gpmc_a27	GPMC address 27 in A/D nonmultiplexed mode and Address 27 in A/D multiplexed mode	O	H5(3) / AF4
gpmc_cs0	GPMC Chip Select 0 (active low)	O	T1
gpmc_cs1	GPMC Chip Select 1 (active low)	O	H6
gpmc_cs2	GPMC Chip Select 2 (active low)	O	P2
gpmc_cs3	GPMC Chip Select 3 (active low)	O	P1
gpmc_cs4	GPMC Chip Select 4 (active low)	O	N6
gpmc_cs5	GPMC Chip Select 5 (active low)	O	M4
gpmc_cs6	GPMC Chip Select 6 (active low)	O	N1
gpmc_cs7	GPMC Chip Select 7 (active low)	O	P7
gpmc_clk(1) (2)	GPMC Clock output	IO	P7

Copyright © 2015–2019, Texas Instruments Incorporated

表 4-8. GPMC Signal Descriptions (continued)

SIGNAL NAME	DESCRIPTION	TYPE	BALL
gpmc_advn_ale	GPMC address valid active low or address latch enable	O	N1
gpmc_oen_ren	GPMC output enable active low or read enable	O	M5
gpmc_wen	GPMC write enable active low	O	M3
gpmc_ben0	GPMC lower-byte enable active low	O	N6
gpmc_ben1	GPMC upper-byte enable active low	O	M4
gpmc_wait0	GPMC external indication of wait 0	I	N2
gpmc_wait1	GPMC external indication of wait 1	I	P7/ N1

(1) This clock signal is implemented as 'pad loopback' inside the device - the output signal is looped back through the input buffer to serve as the internal reference signal. Series termination is recommended (as close to device pin as possible) to improve signal integrity of the clock input. Any nonmonotonicity in voltage that occurs at the pad loopback clock pin between V_{IH} and V_{IL} must be less than V_{HYS}.

(2) The gpio6_16.clkout1 signal can be used as an “always-on” alternative to gpmc_clk provided that the external device can support the associated timing. See 表 7-26 *GPMC/NOR Flash Interface Switching Characteristics - Synchronous Mode - Default* and 表 7-28 *GPMC/NOR Flash Interface Switching Characteristics - Synchronous Mode - Alternate* for timing information.

(3) The internal pull resistors for balls K7, M7, J5, K6, J4, J6, H4, H5 are permanently disabled when sysboot15 is set to 1 as described in the section *Sysboot Configuration* of the Device TRM. If internal pull-up/down resistors are desired on these balls then sysboot15 should be set to 0. If gpmc boot mode is used with SYSBOOT15=1 (not recommended) then external pull-downs should be implemented to keep the address bus at logic-0 value during boot since the gpmc ms-address bits are high-z during boot.

4.4.6 Timer

注: For more information, see the Timers section of the device TRM.

表 4-9. Timer Signal Descriptions

SIGNAL NAME	DESCRIPTION	TYPE	BALL
timer1	PWM output/event trigger input	IO	M4/ E21
timer2	PWM output/event trigger input	IO	N6/ F20
timer3	PWM output/event trigger input	IO	N1/ F21
timer4	PWM output/event trigger input	IO	P7/ D12
timer5	PWM output/event trigger input	IO	U2/ B12
timer6	PWM output/event trigger input	IO	T2/ A11
timer7	PWM output/event trigger input	IO	R3/ B13
timer8	PWM output/event trigger input	IO	P4/ A12
timer9	PWM output/event trigger input	IO	P9/ E14
timer10	PWM output/event trigger input	IO	N9/ A13
timer11	PWM output/event trigger input	IO	R4/ G14
timer12	PWM output/event trigger input	IO	N7/ F14
timer13	PWM output/event trigger input	IO	D18/ AF8
timer14	PWM output/event trigger input	IO	E17/ AE9
timer15	PWM output/event trigger input	IO	B26/ AF9/ AC10
timer16	PWM output/event trigger input	IO	C23/ AD9/ AB10

4.4.7 Inter-Integrated Circuit Interface (I^2C)

注: For more information, see the Serial Communication Interface / Multimaster High-Speed I2C Controller / HS I2C Environment / HS I2C in I2C Mode section of the device TRM.

注: I2C1 and I2C2 do NOT support HS-mode.

表 4-10. I²C Signal Descriptions

SIGNAL NAME	DESCRIPTION	TYPE	BALL
Inter-Integrated Circuit Interface 1 (I2C1)			
i2c1_scl	I2C1 Clock	IOD	C20
i2c1_sda	I2C1 Data	IOD	C21
Inter-Integrated Circuit Interface 2 (I2C2)			
i2c2_scl	I2C2 Clock	IOD	F17
i2c2_sda	I2C2 Data	IOD	C25
Inter-Integrated Circuit Interface 3 (I2C3)			
i2c3_scl	I2C3 Clock	IOD	P7/ D14/ AB4/ F20
i2c3_sda	I2C3 Data	IOD	N1/ C14/ AC5/ E21
Inter-Integrated Circuit Interface 4 (I2C4)			
i2c4_scl	I2C4 Clock	IOD	R6/ J14/ A21/ Y9
i2c4_sda	I2C4 Data	IOD	T9/ B14/ C18/ W7
Inter-Integrated Circuit Interface 5 (I2C5)			
i2c5_scl	I2C5 Clock	IOD	AB9/ P6/ F12
i2c5_sda	I2C5 Data	IOD	AA3/ R9/ G12

4.4.8 HDQ / 1-Wire Interface (HDQ1W)

注: For more information, see the Serial Communication Interface / HDQ/1-Wire section of the device TRM.

表 4-11. HDQ / 1-Wire Signal Descriptions

SIGNAL NAME	DESCRIPTION	TYPE	BALL
hdq0	HDQ or 1-wire protocol single interface pin	IOD	D18/ C23

4.4.9 Universal Asynchronous Receiver Transmitter (UART)

注: For more information see the Serial Communication Interface / UART/IrDA/CIR section of the device TRM.

表 4-12. UART Signal Descriptions

SIGNAL NAME	DESCRIPTION	TYPE	BALL
Universal Asynchronous Receiver/Transmitter 1 (UART1)			
uart1_dcdn	UART1 Data Carrier Detect active low	I	D28
uart1_dsrn	UART1 Data Set Ready Active Low	I	D26
uart1_dtrn	UART1 Data Terminal Ready Active Low	O	D27
uart1_rin	UART1 Ring Indicator	I	C28
uart1_rxd	UART1 Receive Data	I	B27
uart1_txd	UART1 Transmit Data	O	C26
uart1_ctsn	UART1 clear to send active low	I	E25
uart1_rtsn	UART1 request to send active low	O	C27
Universal Asynchronous Receiver/Transmitter 2 (UART2)			
uart2_rxd	UART2 Receive Data	I	D28
uart2_txd	UART2 Transmit Data	O	D26
uart2_ctsn	UART2 clear to send active low	I	D27
uart2_rtsn	UART2 request to send active low	O	C28

Copyright © 2015–2019, Texas Instruments Incorporated

表 4-12. UART Signal Descriptions (continued)

SIGNAL NAME	DESCRIPTION	TYPE	BALL
Universal Asynchronous Receiver/Transmitter 3 (UART3)/IrDA			
uart3_rxd	UART3 Receive Data for both normal UART mode and IrDA mode.	I	V2/ AB3/ A26 / D27
uart3_txd	UART3 Transmit Data	O	Y1/ AA4/ B22/ C28
uart3_ctsn	UART3 clear to send active low	I	U4/ W9/ G17/ D28
uart3_rtsn	UART3 request to send active low	O	V1/ V9/ D26/ B24
uart3_rctx	Remote control data	O	D28
uart3_sd	Infrared transceiver configure/shutdown	O	D26
uart3_irtx	Infrared data output	O	C28
Universal Asynchronous Receiver/Transmitter 4 (UART4)			
uart4_rxd	UART4 Receive Data	I	V7/ G16/ B21
uart4_txd	UART4 Transmit Data	O	U7/ D17/ B20
uart4_ctsn	UART4 clear to send active low	I	V6
uart4_rtsn	UART4 request to send active low	O	U6
Universal Asynchronous Receiver/Transmitter 5 (UART5)			
uart5_rxd	UART5 Receive Data	I	R6/ F11/ B19/ AC7/ G17
uart5_txd	UART5 Transmit Data	O	T9/ G10/ C17/ AC6/ B24
uart5_ctsn	UART5 clear to send active low	I	T6/ AC9
uart5_rtsn	UART5 request to send active low	O	T7/ AC3
Universal Asynchronous Receiver/Transmitter 6 (UART6)			
uart6_rxd	UART6 Receive Data	I	P6/ E8/ G12/ W7
uart6_txd	UART6 Transmit Data	O	R9/ D9/ F12/ Y9
uart6_ctsn	UART6 clear to send active low	I	R5/ G13
uart6_rtsn	UART6 request to send active low	O	P5/ J11
Universal Asynchronous Receiver/Transmitter 7 (UART7)			
uart7_rxd	UART7 Receive Data	I	T6/ AD9/ B7/ B18
uart7_txd	UART7 Transmit Data	O	T7/ AF9/ B8/ F15
uart7_ctsn	UART7 clear to send active low	I	AE9/ B19
uart7_rtsn	UART7 request to send active low	O	AF8/ C17
Universal Asynchronous Receiver/Transmitter 8 (UART8)			
uart8_rxd	UART8 Receive Data	I	AE8/ R5/ C18/ G20
uart8_txd	UART8 Transmit Data	O	AD8/ P5/ A21/ G19
uart8_ctsn	UART8 clear to send active low	I	AG7/ G16
uart8_rtsn	UART8 request to send active low	O	AH6/ D17
Universal Asynchronous Receiver/Transmitter 9 (UART9)			
uart9_rxd	UART9 Receive Data	I	G1/ AA3/ E25
uart9_txd	UART9 Transmit Data	O	G6/ AB9/ C27
uart9_ctsn	UART9 clear to send active low	I	F2/ AB3
uart9_rtsn	UART9 request to send active low	O	F3/ AA4
Universal Asynchronous Receiver/Transmitter 10 (UART10)			
uart10_rxd	UART10 Receive Data	I	D1/ E21/ AC8/ D27
uart10_txd	UART10 Transmit Data	O	E2/ F20/ AD6/ C28
uart10_ctsn	UART10 clear to send active low	I	D2/ AB8
uart10_rtsn	UART10 request to send active low	O	F4/ AB5

Copyright © 2015–2019, Texas Instruments Incorporated

4.4.10 Multichannel Serial Peripheral Interface (McSPI)

> 注意
>
> The I/O timings provided in 7, *Timing Requirements and Switching Characteristics* are applicable for all combinations of signals for SPI1 and SPI2. However, the timings are valid only for SPI3 and SPI4 if signals within a single IOSET are used. The IOSETS are defined in the 表 7-45.

注: For more information, see the Serial Communication Interface / Multichannel Serial Peripheral Interface (McSPI) section of the device TRM.

表 4-13. SPI Signal Descriptions

SIGNAL NAME	DESCRIPTION	TYPE	BALL
Serial Peripheral Interface 1			
spi1_sclk(1)	SPI1 Clock	IO	A25
spi1_d1	SPI1 Data. Can be configured as either MISO or MOSI.	IO	F16
spi1_d0	SPI1 Data. Can be configured as either MISO or MOSI.	IO	B25
spi1_cs0	SPI1 Chip Select	IO	A24
spi1_cs1	SPI1 Chip Select	IO	A22
spi1_cs2	SPI1 Chip Select	IO	B21
spi1_cs3	SPI1 Chip Select	IO	B20
Serial Peripheral Interface 2			
spi2_sclk(1)	SPI2 Clock	IO	A26
spi2_d1	SPI2 Data. Can be configured as either MISO or MOSI.	IO	B22
spi2_d0	SPI2 Data. Can be configured as either MISO or MOSI.	IO	G17
spi2_cs0	SPI2 Chip Select	IO	B24
spi2_cs1	SPI2 Chip Select	IO	A22
spi2_cs2	SPI2 Chip Select	IO	B21
spi2_cs3	SPI2 Chip Select	IO	B20
Serial Peripheral Interface 3			
spi3_sclk(1)	SPI3 Clock	IO	AD9/ V2/ B12/ E11/ AC4/ C18
spi3_d1	SPI3 Data. Can be configured as either MISO or MOSI.	IO	AF9/ Y1/ B10/ A11/ A21/ AC7
spi3_d0	SPI3 Data. Can be configured as either MISO or MOSI.	IO	AE9/ W9/ C11/ B13/ AC6/ G16
spi3_cs0	SPI3 Chip Select	IO	AF8/ V9/ D11/ A12/ AC9/ D17
spi3_cs1	SPI3 Chip Select	IO	B11/ AC3/ E14
spi3_cs2	SPI3 Chip Select	IO	F11
spi3_cs3	SPI3 Chip Select	IO	A10
Serial Peripheral Interface 4			
spi4_sclk(1)	SPI4 Clock	IO	N7/ G1/ AA3/ V7/ AC8
spi4_d1	SPI4 Data. Can be configured as either MISO or MOSI.	IO	R4/ G6/ AB9/ U7/ AD6
spi4_d0	SPI4 Data. Can be configured as either MISO or MOSI.	IO	N9/ F2/ AB3/ V6/ AB8
spi4_cs0	SPI4 Chip Select	IO	P9/ F3/ AA4/ U6/ AB5

Copyright © 2015–2019, Texas Instruments Incorporated

表 4-13. SPI Signal Descriptions (continued)

SIGNAL NAME	DESCRIPTION	TYPE	BALL
spi4_cs1	SPI4 Chip Select	IO	P4/ Y1
spi4_cs2	SPI4 Chip Select	IO	R3/ W9
spi4_cs3	SPI4 Chip Select	IO	T2/ V9

(1) This clock signal is implemented as 'pad loopback' inside the device - the output signal is looped back through the input buffer to serve as the internal reference signal. Series termination is recommended (as close to device pin as possible) to improve signal integrity of the clock input. Any nonmonotonicity in voltage that occurs at the pad loopback clock pin between V_{IH} and V_{IL} must be less than V_{HYS}.

4.4.11 Quad Serial Peripheral Interface (QSPI)

注: For more information see the Serial Communication Interface / Quad Serial Peripheral Interface section of the device TRM.

表 4-14. QSPI Signal Descriptions

SIGNAL NAME	DESCRIPTION	TYPE	BALL
qspi1_sclk	QSPI1 Serial Clock	O	R2
qspi1_rtclk	QSPI1 Return Clock Input. Must be connected from QSPI1_SCLK on PCB. Refer to PCB Guidelines for QSPI1.	I	R3
qspi1_d0	QSPI1 Data[0]. This pin is output data for all commands/writes and for dual read and quad read modes it becomes input data pin during read phase.	IO	U1
qspi1_d1	QSPI1 Data[1]. Input read data in all modes.	I	P3
qspi1_d2	QSPI1 Data[2]. This pin is used only in quad read mode as input data pin during read phase	I	U2
qspi1_d3	QSPI1 Data[3]. This pin is used only in quad read mode as input data pin during read phase	I	T2
qspi1_cs0	QSPI1 Chip Select[0]. This pin is Used for QSPI1 boot modes.	O	P2
qspi1_cs1	QSPI1 Chip Select[1]	O	P1
qspi1_cs2	QSPI1 Chip Select[2]	O	T7
qspi1_cs3	QSPI1 Chip Select[3]	O	P6

4.4.12 Multichannel Audio Serial Port (McASP)

注: For more information, see the Serial Communication Interface / Multichannel Audio Serial Port (McASP) section of the device TRM.

表 4-15. McASP Signal Descriptions

SIGNAL NAME	DESCRIPTION	TYPE	BALL
Multichannel Audio Serial Port 1			
mcasp1_axr0	McASP1 Transmit/Receive Data	IO	G12
mcasp1_axr1	McASP1 Transmit/Receive Data	IO	F12
mcasp1_axr2	McASP1 Transmit/Receive Data	IO	G13
mcasp1_axr3	McASP1 Transmit/Receive Data	IO	J11
mcasp1_axr4	McASP1 Transmit/Receive Data	IO	D18/ E12
mcasp1_axr5	McASP1 Transmit/Receive Data	IO	E17/ F13
mcasp1_axr6	McASP1 Transmit/Receive Data	IO	B26/ C12
mcasp1_axr7	McASP1 Transmit/Receive Data	IO	C23/ D12
mcasp1_axr8	McASP1 Transmit/Receive Data	IO	E21/ B12
mcasp1_axr9	McASP1 Transmit/Receive Data	IO	F20/ A11
mcasp1_axr10	McASP1 Transmit/Receive Data	IO	F21/ B13

表 4-15. McASP Signal Descriptions (continued)

SIGNAL NAME	DESCRIPTION	TYPE	BALL
mcasp1_axr11	McASP1 Transmit/Receive Data	IO	A12
mcasp1_axr12	McASP1 Transmit/Receive Data	IO	E14
mcasp1_axr13	McASP1 Transmit/Receive Data	IO	A13
mcasp1_axr14	McASP1 Transmit/Receive Data	IO	G14
mcasp1_axr15	McASP1 Transmit/Receive Data	IO	F14
mcasp1_fsx	McASP1 Transmit Frame Sync	IO	D14
mcasp1_aclkr(1)	McASP1 Receive Bit Clock	IO	B14
mcasp1_fsr	McASP1 Receive Frame Sync	IO	J14
mcasp1_ahclkx	McASP1 Transmit High-Frequency Master Clock	O	D18
mcasp1_aclkx(1)	McASP1 Transmit Bit Clock	IO	C14
Multichannel Audio Serial Port 2			
mcasp2_axr0	McASP2 Transmit/Receive Data	IO	B15
mcasp2_axr1	McASP2 Transmit/Receive Data	IO	A15
mcasp2_axr2	McASP2 Transmit/Receive Data	IO	C15
mcasp2_axr3	McASP2 Transmit/Receive Data	IO	A16
mcasp2_axr4	McASP2 Transmit/Receive Data	IO	D15
mcasp2_axr5	McASP2 Transmit/Receive Data	IO	B16
mcasp2_axr6	McASP2 Transmit/Receive Data	IO	B17
mcasp2_axr7	McASP2 Transmit/Receive Data	IO	A17
mcasp2_axr8	McASP2 Transmit/Receive Data	IO	D18
mcasp2_axr9	McASP2 Transmit/Receive Data	IO	E17
mcasp2_axr10	McASP2 Transmit/Receive Data	IO	B26
mcasp2_axr11	McASP2 Transmit/Receive Data	IO	C23
mcasp2_axr12	McASP2 Transmit/Receive Data	IO	B18
mcasp2_axr13	McASP2 Transmit/Receive Data	IO	F15
mcasp2_axr14	McASP2 Transmit/Receive Data	IO	B19
mcasp2_axr15	McASP2 Transmit/Receive Data	IO	C17
mcasp2_fsx	McASP2 Transmit Frame Sync	IO	A18
mcasp2_aclkr(1)	McASP2 Receive Bit Clock	IO	E15
mcasp2_fsr	McASP2 Receive Frame Sync	IO	A20
mcasp2_ahclkx	McASP2 Transmit High-Frequency Master Clock	O	E17
mcasp2_aclkx(1)	McASP2 Transmit Bit Clock	IO	A19
Multichannel Audio Serial Port 3			
mcasp3_axr0	McASP3 Transmit/Receive Data	IO	B19
mcasp3_axr1	McASP3 Transmit/Receive Data	IO	C17
mcasp3_axr2	McASP3 Transmit/Receive Data	IO	C15
mcasp3_axr3	McASP3 Transmit/Receive Data	IO	A16
mcasp3_fsx	McASP3 Transmit Frame Sync	IO	F15
mcasp3_ahclkx	McASP3 Transmit High-Frequency Master Clock	O	B26
mcasp3_aclkx(1)	McASP3 Transmit Bit Clock	IO	B18
mcasp3_aclkr(1)	McASP3 Receive Bit Clock	IO	B18
mcasp3_fsr	McASP3 Receive Frame Sync	IO	F15
Multichannel Audio Serial Port 4			
mcasp4_axr0	McASP4 Transmit/Receive Data	IO	G16
mcasp4_axr1	McASP4 Transmit/Receive Data	IO	D17
mcasp4_axr2	McASP4 Transmit/Receive Data	IO	E12
mcasp4_axr3	McASP4 Transmit/Receive Data	IO	F13

Copyright © 2015–2019, Texas Instruments Incorporated

表 4-15. McASP Signal Descriptions (continued)

SIGNAL NAME	DESCRIPTION	TYPE	BALL
mcasp4_fsx	McASP4 Transmit Frame Sync	IO	A21
mcasp4_ahclkx	McASP4 Transmit High-Frequency Master Clock	O	C23
mcasp4_aclkx(1)	McASP4 Transmit Bit Clock	IO	C18
mcasp4_aclkr(1)	McASP4 Receive Bit Clock	IO	C18
mcasp4_fsr	McASP4 Receive Frame Sync	IO	A21
Multichannel Audio Serial Port 5			
mcasp5_axr0	McASP5 Transmit/Receive Data	IO	AB3
mcasp5_axr1	McASP5 Transmit/Receive Data	IO	AA4
mcasp5_axr2	McASP5 Transmit/Receive Data	IO	C12
mcasp5_axr3	McASP5 Transmit/Receive Data	IO	D12
mcasp5_fsx	McASP5 Transmit Frame Sync	IO	AB9
mcasp5_ahclkx	McASP5 Transmit High-Frequency Master Clock	O	D18
mcasp5_aclkx(1)	McASP5 Transmit Bit Clock	IO	AA3
mcasp5_aclkr(1)	McASP5 Receive Bit Clock	IO	AA3
mcasp5_fsr	McASP5 Receive Frame Sync	IO	AB9
Multichannel Audio Serial Port 6			
mcasp6_axr0	McASP6 Transmit/Receive Data	IO	B12
mcasp6_axr1	McASP6 Transmit/Receive Data	IO	A11
mcasp6_axr2	McASP6 Transmit/Receive Data	IO	G13
mcasp6_axr3	McASP6 Transmit/Receive Data	IO	J11
mcasp6_ahclkx	McASP6 Transmit High-Frequency Master Clock	O	E17
mcasp6_aclkx(1)	McASP6 Transmit Bit Clock	IO	B13
mcasp6_fsx	McASP6 Transmit Frame Sync	IO	A12
mcasp6_aclkr(1)	McASP6 Receive Bit Clock	IO	B13
mcasp6_fsr	McASP6 Receive Frame Sync	IO	A12
Multichannel Audio Serial Port 7			
mcasp7_axr0	McASP7 Transmit/Receive Data	IO	E14
mcasp7_axr1	McASP7 Transmit/Receive Data	IO	A13
mcasp7_axr2	McASP7 Transmit/Receive Data	IO	B14
mcasp7_axr3	McASP7 Transmit/Receive Data	IO	J14
mcasp7_ahclkx	McASP7 Transmit High-Frequency Master Clock	O	B26
mcasp7_aclkx(1)	McASP7 Transmit Bit Clock	IO	G14
mcasp7_fsx	McASP7 Transmit Frame Sync	IO	F14
mcasp7_aclkr(1)	McASP7 Receive Bit Clock	IO	G14
mcasp7_fsr	McASP7 Receive Frame Sync	IO	F14
Multichannel Audio Serial Port 8			
mcasp8_axr0	McASP8 Transmit/Receive Data	IO	D15
mcasp8_axr1	McASP8 Transmit/Receive Data	IO	B16
mcasp8_axr2	McASP8 Transmit/Receive Data	IO	E15
mcasp8_axr3	McASP8 Transmit/Receive Data	IO	A20
mcasp8_ahclkx	McASP8 Transmit High-Frequency Master Clock	O	C23
mcasp8_aclkx(1)	McASP8 Transmit Bit Clock	IO	B17
mcasp8_fsx	McASP8 Transmit Frame Sync	IO	A17
mcasp8_aclkr(1)	McASP8 Receive Bit Clock	IO	B17
mcasp8_fsr	McASP8 Receive Frame Sync	IO	A17

Copyright © 2015–2019, Texas Instruments Incorporated

(1) This clock signal is implemented as 'pad loopback' inside the device - the output signal is looped back through the input buffer to serve as the internal reference signal. Series termination is recommended (as close to device pin as possible) to improve signal integrity of the clock input. Any nonmonotonicity in voltage that occurs at the pad loopback clock pin between V_{IH} and V_{IL} must be less than V_{HYS}.

4.4.13 Universal Serial Bus (USB)

注: For more information, see: Serial Communication Interface / SuperSpeed USB DRD Subsystem section of the device TRM.

表 4-16. USB Signal Descriptions

SIGNAL NAME	DESCRIPTION	TYPE	BALL
Universal Serial Bus 1			
usb1_dp	USB1 USB2.0 differential signal pair (positive)	IODS	AD12
usb1_dm	USB1 USB2.0 differential signal pair (negative)	IODS	AC12
usb1_drvvbus	USB1 Drive VBUS signal	O	AB10
usb_rxn0	USB1 USB3.0 receiver negative lane	IDS	AF12
usb_rxp0	USB1 USB3.0 receiver positive lane	IDS	AE12
usb_txn0	USB1 USB3.0 transmitter negative lane	ODS	AC11
usb_txp0	USB1 USB3.0 transmitter positive lane	ODS	AD11
Universal Serial Bus 2			
usb2_dp	USB2 USB2.0 differential signal pair (positive)	IODS	AE11
usb2_dm	USB2 USB2.0 differential signal pair (negative)	IODS	AF11
usb2_drvvbus	USB2 Drive VBUS signal	O	AC10

4.4.14 Serial Advanced Technology Attachment (SATA)

注: For more information, see the Serial Communication Interfaces / SATA section of the device TRM.

表 4-17. SATA Signal Descriptions

SIGNAL NAME	DESCRIPTION	TYPE	BALL
sata1_rxn0	SATA differential negative receiver lane 0	IDS	AH9
sata1_rxp0	SATA differential positive receiver lane 0	IDS	AG9
sata1_txn0	SATA differential negative transmitter lane 0	ODS	AG10
sata1_txp0	SATA differential positive transmitter lane 0	ODS	AH10
sata1_led	SATA channel activity indicator	O	A22/ G19

4.4.15 Peripheral Component Interconnect Express (PCIe)

注: For more information, see the *Serial Communication Interfaces / PCIe Controllers* and the *Shared PHY Component Subsystems / PCIe Shared PHY Subsystem* sections of the device TRM.

表 4-18. PCIe Signal Descriptions

SIGNAL NAME	DESCRIPTION	TYPE	BALL
pcie_rxn0	PCIe1_PHY_RX Receive Data Lane 0 (negative) - mapped to PCIe_SS1 only.	IDS	AG13
pcie_rxp0	PCIe1_PHY_RX Receive Data Lane 0 (positive) - mapped to PCIe_SS1 only.	IDS	AH13
pcie_txn0	PCIe1_PHY_TX Transmit Data Lane 0 (negative) - mapped to PCIe_SS1 only.	ODS	AG14

Copyright © 2015–2019, Texas Instruments Incorporated

表 4-18. PCIe Signal Descriptions (continued)

SIGNAL NAME	DESCRIPTION	TYPE	BALL
pcie_txp0	PCIe1_PHY_TX Transmit Data Lane 0 (positive) - mapped to PCIe_SS1 only.	ODS	AH14
pcie_rxn1	PCIe2_PHY_RX Receive Data Lane 1 (negative) - mapped to either PCIe_SS1 (dual lane- mode) or PCIe_SS2 (single lane- mode)	IDS	AG11
pcie_rxp1	PCIe2_PHY_RX Receive Data Lane 1 (positive) - mapped to either PCIe_SS1 (dual lane- mode) or PCIe_SS2 (single lane- mode)	IDS	AH11
pcie_txn1	PCIe2_PHY_TX Transmit Data Lane 1 (negative) - mapped to either PCIe_SS1 (dual lane- mode) or PCIe_SS2 (single lane- mode)	ODS	AG12
pcie_txp1	PCIe2_PHY_TX Transmit Data Lane 1 (positive) - mapped to either PCIe_SS1 (dual lane- mode) or PCIe_SS2 (single lane- mode)	ODS	AH12
ljcb_clkp	PCIe1_PHY / PCIe2_PHY shared Reference Clock Input / Output Differential Pair (positive)	IODS	AG15
ljcb_clkn	PCIe1_PHY / PCIe2_PHY shared Reference Clock Input / Output Differential Pair (negative)	IODS	AH15

4.4.16 Controller Area Network Interface (DCAN)

注: For more information, see the Serial Communication Interface / DCAN section of the device TRM.

表 4-19. DCAN Signal Descriptions

SIGNAL NAME	DESCRIPTION	TYPE	BALL
DCAN 1			
dcan1_tx	DCAN1 transmit data pin	IO	G20
dcan1_rx	DCAN1 receive data pin	IO	G19/ AD17
DCAN 2			
dcan2_tx	DCAN2 transmit data pin	IO	E21/ B21
dcan2_rx	DCAN2 receive data pin	IO	F20/ AC17/ B20

4.4.17 Ethernet Interface (GMAC_SW)

注意

The I/O timings provided in 7, *Timing Requirements and Switching Characteristics* are valid only if signals within a single IOSET are used. The IOSETs are defined in the 表 7-72, 表 7-75, 表 7-80 and 表 7-87.

注: For more information, see the Serial Communication Interfaces / Ethernet Controller section of the device TRM.

表 4-20. GMAC Signal Descriptions

SIGNAL NAME	DESCRIPTION	TYPE	BALL
rgmii0_txc	RGMII0 Transmit Clock	O	W9
rgmii0_txctl	RGMII0 Transmit Enable	O	V9
rgmii0_txd3	RGMII0 Transmit Data	O	V7
rgmii0_txd2	RGMII0 Transmit Data	O	U7
rgmii0_txd1	RGMII0 Transmit Data	O	V6
rgmii0_txd0	RGMII0 Transmit Data	O	U6

表 4-20. GMAC Signal Descriptions (continued)

SIGNAL NAME	DESCRIPTION	TYPE	BALL
rgmii0_rxc	RGMII0 Receive Clock	I	U5
rgmii0_rxctl	RGMII0 Receive Control	I	V5
rgmii0_rxd3	RGMII0 Receive Data	I	V4
rgmii0_rxd2	RGMII0 Receive Data	I	V3
rgmii0_rxd1	RGMII0 Receive Data	I	Y2
rgmii0_rxd0	RGMII0 Receive Data	I	W2
rgmii1_txc	RGMII1 Transmit Clock	O	D5
rgmii1_txctl	RGMII1 Transmit Enable	O	C2
rgmii1_txd3	RGMII1 Transmit Data	O	C3
rgmii1_txd2	RGMII1 Transmit Data	O	C4
rgmii1_txd1	RGMII1 Transmit Data	O	B2
rgmii1_txd0	RGMII1 Transmit Data	O	D6
rgmii1_rxc	RGMII1 Receive Clock	I	C5
rgmii1_rxctl	RGMII1 Receive Control	I	A3
rgmii1_rxd3	RGMII1 Receive Data	I	B3
rgmii1_rxd2	RGMII1 Receive Data	I	B4
rgmii1_rxd1	RGMII1 Receive Data	I	B5
rgmii1_rxd0	RGMII1 Receive Data	I	A4
mii1_rxd1	MII1 Receive Data	I	C1
mii1_rxd2	MII1 Receive Data	I	E4
mii1_rxd3	MII1 Receive Data	I	F5
mii1_rxd0	MII1 Receive Data	I	E6
mii1_rxclk	MII1 Receive Clock	I	D5
mii1_rxdv	MII1 Receive Data Valid	I	C2
mii1_txclk	MII1 Transmit Clock	I	C3
mii1_txd0	MII1 Transmit Data	O	C4
mii1_txd1	MII1 Transmit Data	O	B2
mii1_txd2	MII1 Transmit Data	O	D6
mii1_txd3	MII1 Transmit Data	O	C5
mii1_txer	MII1 Transmit Error	O	A3
mii1_rxer	MII1 Receive Data Error	I	B3
mii1_col	MII1 Collision Detect (Sense)	I	B4
mii1_crs	MII1 Carrier Sense	I	B5
mii1_txen	MII1 Transmit Data Enable	O	A4
mii0_rxd1	MII0 Receive Data	I	V6
mii0_rxd2	MII0 Receive Data	I	V9
mii0_rxd3	MII0 Receive Data	I	W9
mii0_rxd0	MII0 Receive Data	I	U6
mii0_rxclk	MII0 Receive Clock	I	Y1
mii0_rxdv	MII0 Receive Data Valid	I	V2
mii0_txclk	MII0 Transmit Clock	I	U5
mii0_txd0	MII0 Transmit Data	O	W2
mii0_txd1	MII0 Transmit Data	O	Y2
mii0_txd2	MII0 Transmit Data	O	V4
mii0_txd3	MII0 Transmit Data	O	V5
mii0_txer	MII0 Transmit Error	O	U4
mii0_rxer	MII0 Receive Data Error	I	U7

Copyright © 2015–2019, Texas Instruments Incorporated

表 4-20. GMAC Signal Descriptions (continued)

SIGNAL NAME	DESCRIPTION	TYPE	BALL
mii0_col	MII0 Collision Detect (Sense)	I	V1
mii0_crs	MII0 Carrier Sense	I	V7
mii0_txen	MII0 Transmit Data Enable	O	V3
rmii0_crs	RMII0 Carrier Sense	I	V7
rmii0_rxer	RMII0 Receive Data Error	I	U7
rmii0_rxd1	RMII0 Receive Data	I	V6
rmii0_rxd0	RMII0 Receive Data	I	U6
rmii0_txen	RMII0 Transmit Data Enable	O	V3
rmii1_crs	RMII1 Carrier Sense	I	V2
rmii1_rxer	RMII1 Receive Data Error	I	Y1
rmii1_rxd1	RMII1 Receive Data	I	W9
rmii1_rxd0	RMII1 Receive Data	I	V9
rmii1_txen	RMII1 Transmit Data Enable	O	U5
rmii1_txd1	RMII1 Transmit Data	O	V5
rmii1_txd0	RMII1 Transmit Data	O	V4
rmii0_txd1	RMII0 Transmit Data	O	Y2
rmii0_txd0	RMII0 Transmit Data	O	W2
mdio_d	MDIO Data	O	AB4/ B20/ F6/ U4
mdio_mclk	MDIO Clock	O	AC5/ B21/ D3/ V1

4.4.18 Media Local Bus (MLB) Interface

注: Media Local Bus (MLB) is not available on this device, and balls listed in 表 4-21 must be left unconnected.

表 4-21. MLB Signal Descriptions

SIGNAL NAME	DESCRIPTION	TYPE	BALL
mlbp_sig_p	Media Local Bus (MLB) Subsystem signal differential pair (positive)	IODS	AC1
mlbp_sig_n	Media Local Bus (MLB) Subsystem signal differential pair (negative)	IODS	AC2
mlbp_dat_p	Media Local Bus (MLB) Subsystem data differential pair (positive)	IODS	AA1
mlbp_dat_n	Media Local Bus (MLB) Subsystem data differential pair (negative)	IODS	AA2
mlbp_clk_p	Media Local Bus (MLB) Subsystem clock differential pair (positive)	IDS	AB1
mlbp_clk_n	Media Local Bus (MLB) Subsystem clock differential pair (negative)	IDS	AB2

4.4.19 eMMC/SD/SDIO

注: For more information, see the HS MMC/SDIO section of the device TRM.

表 4-22. eMMC/SD/SDIO Signal Descriptions

SIGNAL NAME	DESCRIPTION	TYPE	BALL
Multi Media Card 1			
mmc1_clk(1)	MMC1 clock	IO	W6
mmc1_cmd	MMC1 command	IO	Y6
mmc1_sdcd	MMC1 Card Detect	I	W7
mmc1_sdwp	MMC1 Write Protect	I	Y9
mmc1_dat0	MMC1 data bit 0	IO	AA6

表 4-22. eMMC/SD/SDIO Signal Descriptions (continued)

SIGNAL NAME	DESCRIPTION	TYPE	BALL
mmc1_dat1	MMC1 data bit 1	IO	Y4
mmc1_dat2	MMC1 data bit 2	IO	AA5
mmc1_dat3	MMC1 data bit 3	IO	Y3
Multi Media Card 2			
mmc2_clk(1)	MMC2 clock	IO	J7
mmc2_cmd	MMC2 command	IO	H6
mmc2_sdcd	MMC2 Card Detect	I	G20
mmc2_sdwp	MMC2 Write Protect	I	G19
mmc2_dat0	MMC2 data bit 0	IO	J4
mmc2_dat1	MMC2 data bit 1	IO	J6
mmc2_dat2	MMC2 data bit 2	IO	H4
mmc2_dat3	MMC2 data bit 3	IO	H5
mmc2_dat4	MMC2 data bit 4	IO	K7
mmc2_dat5	MMC2 data bit 5	IO	M7
mmc2_dat6	MMC2 data bit 6	IO	J5
mmc2_dat7	MMC2 data bit 7	IO	K6
Multi Media Card 3			
mmc3_clk(1)	MMC3 clock	IO	AD4
mmc3_cmd	MMC3 command	IO	AC4
mmc3_sdcd	MMC3 Card Detect	I	B21
mmc3_sdwp	MMC3 Write Protect	I	B20
mmc3_dat0	MMC3 data bit 0	IO	AC7
mmc3_dat1	MMC3 data bit 1	IO	AC6
mmc3_dat2	MMC3 data bit 2	IO	AC9
mmc3_dat3	MMC3 data bit 3	IO	AC3
mmc3_dat4	MMC3 data bit 4	IO	AC8
mmc3_dat5	MMC3 data bit 5	IO	AD6
mmc3_dat6	MMC3 data bit 6	IO	AB8
mmc3_dat7	MMC3 data bit 7	IO	AB5
Multi Media Card 4			
mmc4_clk(1)	MMC4 clock	IO	E25
mmc4_cmd	MMC4 command	IO	C27
mmc4_sdcd	MMC4 Card Detect	I	B27
mmc4_sdwp	MMC4 Write Protect	I	C26
mmc4_dat0	MMC4 data bit 0	IO	D28
mmc4_dat1	MMC4 data bit 1	IO	D26
mmc4_dat2	MMC4 data bit 2	IO	D27
mmc4_dat3	MMC4 data bit 3	IO	C28

(1) By default, this clock signal is implemented as 'pad loopback' inside the device - the output signal is looped back through the input buffer to serve as the internal reference signal. mmc1_clk and mmc2_clk have an optional software programmable setting to use an 'internal loopback clock' instead of the default 'pad loopback clock'. If the 'pad loopback clock' is used, series termination is recommended (as close to device pin as possible) to improve signal integrity of the clock input. Any nonmonotonicity in voltage that occurs at the pad loopback clock pin between V_{IH} and V_{IL} must be less than V_{HYS}.

4.4.20 General-Purpose Interface (GPIO)

注: For more information, see the General-Purpose Interface section of the device TRM.

Copyright © 2015–2019, Texas Instruments Incorporated

表 4-23. GPIOs Signal Descriptions

SIGNAL NAME	DESCRIPTION	TYPE	BALL
GPIO 1			
gpio1_0	General-Purpose Input	I	AD17
gpio1_1	General-Purpose Input	I	AC17
gpio1_2	General-Purpose Input	I	AB16
gpio1_3	General-Purpose Input	I	AC16
gpio1_4	General-Purpose Input/Output	IO	D15
gpio1_5	General-Purpose Input/Output	IO	A17
gpio1_6	General-Purpose Input/Output	IO	M6
gpio1_7	General-Purpose Input/Output	IO	M2
gpio1_8	General-Purpose Input/Output	IO	L5
gpio1_9	General-Purpose Input/Output	IO	M1
gpio1_10	General-Purpose Input/Output	IO	L6
gpio1_11	General-Purpose Input/Output	IO	L4
gpio1_12	General-Purpose Input/Output	IO	L3
gpio1_13	General-Purpose Input/Output	IO	L2
gpio1_14	General-Purpose Input/Output	IO	G20
gpio1_15	General-Purpose Input/Output	IO	G19
gpio1_16	General-Purpose Input/Output	IO	D27
gpio1_17	General-Purpose Input/Output	IO	C28
gpio1_18	General-Purpose Input/Output	IO	H1
gpio1_19	General-Purpose Input/Output	IO	J3
gpio1_20	General-Purpose Input/Output	IO	H2
gpio1_21	General-Purpose Input/Output	IO	H3
gpio1_22	General-Purpose Input/Output	IO	AC8
gpio1_23	General-Purpose Input/Output	IO	AD6
gpio1_24	General-Purpose Input/Output	IO	AB8
gpio1_25	General-Purpose Input/Output	IO	AB5
gpio1_26	General-Purpose Input/Output	IO	P6
gpio1_27	General-Purpose Input/Output	IO	R9
gpio1_28	General-Purpose Input/Output	IO	R5
gpio1_29	General-Purpose Input/Output	IO	P5
gpio1_30	General-Purpose Input/Output	IO	N7
gpio1_31	General-Purpose Input/Output	IO	R4
GPIO 2			
gpio2_0	General-Purpose Input/Output	IO	N9
gpio2_1	General-Purpose Input/Output	IO	P9
gpio2_2	General-Purpose Input/Output	IO	P4
gpio2_3	General-Purpose Input/Output	IO	R3
gpio2_4	General-Purpose Input/Output	IO	T2
gpio2_5	General-Purpose Input/Output	IO	U2
gpio2_6	General-Purpose Input/Output	IO	U1
gpio2_7	General-Purpose Input/Output	IO	P3
gpio2_8	General-Purpose Input/Output	IO	R2
gpio2_9	General-Purpose Input/Output	IO	K7
gpio2_10	General-Purpose Input/Output	IO	M7
gpio2_11	General-Purpose Input/Output	IO	J5
gpio2_12	General-Purpose Input/Output	IO	K6

Copyright © 2015–2019, Texas Instruments Incorporated

表 4-23. GPIOs Signal Descriptions (continued)

SIGNAL NAME	DESCRIPTION	TYPE	BALL
gpio2_13	General-Purpose Input/Output	IO	J7
gpio2_14	General-Purpose Input/Output	IO	J4
gpio2_15	General-Purpose Input/Output	IO	J6
gpio2_16	General-Purpose Input/Output	IO	H4
gpio2_17	General-Purpose Input/Output	IO	H5
gpio2_18	General-Purpose Input/Output	IO	H6
gpio2_19	General-Purpose Input/Output	IO	T1
gpio2_20	General-Purpose Input/Output	IO	P2
gpio2_21	General-Purpose Input/Output	IO	P1
gpio2_22	General-Purpose Input/Output	IO	P7
gpio2_23	General-Purpose Input/Output	IO	N1
gpio2_24	General-Purpose Input/Output	IO	M5
gpio2_25	General-Purpose Input/Output	IO	M3
gpio2_26	General-Purpose Input/Output	IO	N6
gpio2_27	General-Purpose Input/Output	IO	M4
gpio2_28	General-Purpose Input/Output	IO	N2
gpio2_29	General-Purpose Input/Output	IO	B17
gpio2_30	General-Purpose Input/Output	IO	AG8
gpio2_31	General-Purpose Input/Output	IO	AH7
GPIO 3			
gpio3_0	General-Purpose Input/Output	IO	AD9
gpio3_1	General-Purpose Input/Output	IO	AF9
gpio3_2	General-Purpose Input/Output	IO	AE9
gpio3_3	General-Purpose Input/Output	IO	AF8
gpio3_4	General-Purpose Input/Output	IO	AE8
gpio3_5	General-Purpose Input/Output	IO	AD8
gpio3_6	General-Purpose Input/Output	IO	AG7
gpio3_7	General-Purpose Input/Output	IO	AH6
gpio3_8	General-Purpose Input/Output	IO	AH3
gpio3_9	General-Purpose Input/Output	IO	AH5
gpio3_10	General-Purpose Input/Output	IO	AG6
gpio3_11	General-Purpose Input/Output	IO	AH4
gpio3_12	General-Purpose Input/Output	IO	AG4
gpio3_13	General-Purpose Input/Output	IO	AG2
gpio3_14	General-Purpose Input/Output	IO	AG3
gpio3_15	General-Purpose Input/Output	IO	AG5
gpio3_16	General-Purpose Input/Output	IO	AF2
gpio3_17	General-Purpose Input/Output	IO	AF6
gpio3_18	General-Purpose Input/Output	IO	AF3
gpio3_19	General-Purpose Input/Output	IO	AF4
gpio3_20	General-Purpose Input/Output	IO	AF1
gpio3_21	General-Purpose Input/Output	IO	AE3
gpio3_22	General-Purpose Input/Output	IO	AE5
gpio3_23	General-Purpose Input/Output	IO	AE1
gpio3_24	General-Purpose Input/Output	IO	AE2
gpio3_25	General-Purpose Input/Output	IO	AE6
gpio3_26	General-Purpose Input/Output	IO	AD2

Copyright © 2015–2019, Texas Instruments Incorporated

表 4-23. GPIOs Signal Descriptions (continued)

SIGNAL NAME	DESCRIPTION	TYPE	BALL
gpio3_27	General-Purpose Input/Output	IO	AD3
gpio3_28	General-Purpose Input/Output	IO	E1
gpio3_29	General-Purpose Input/Output	IO	G2
gpio3_30	General-Purpose Input/Output	IO	H7
gpio3_31	General-Purpose Input/Output	IO	G1
GPIO 4			
gpio4_0	General-Purpose Input/Output	IO	G6
gpio4_1	General-Purpose Input/Output	IO	F2
gpio4_2	General-Purpose Input/Output	IO	F3
gpio4_3	General-Purpose Input/Output	IO	D1
gpio4_4	General-Purpose Input/Output	IO	E2
gpio4_5	General-Purpose Input/Output	IO	D2
gpio4_6	General-Purpose Input/Output	IO	F4
gpio4_7	General-Purpose Input/Output	IO	C1
gpio4_8	General-Purpose Input/Output	IO	E4
gpio4_9	General-Purpose Input/Output	IO	F5
gpio4_10	General-Purpose Input/Output	IO	E6
gpio4_11	General-Purpose Input/Output	IO	D3
gpio4_12	General-Purpose Input/Output	IO	F6
gpio4_13	General-Purpose Input/Output	IO	D5
gpio4_14	General-Purpose Input/Output	IO	C2
gpio4_15	General-Purpose Input/Output	IO	C3
gpio4_16	General-Purpose Input/Output	IO	C4
gpio4_17	General-Purpose Input/Output	IO	A12
gpio4_18	General-Purpose Input/Output	IO	E14
gpio4_19	General-Purpose Input/Output	IO	D11
gpio4_20	General-Purpose Input/Output	IO	B10
gpio4_21	General-Purpose Input/Output	IO	B11
gpio4_22	General-Purpose Input/Output	IO	C11
gpio4_23	General-Purpose Input/Output	IO	E11
gpio4_24	General-Purpose Input/Output	IO	B2
gpio4_25	General-Purpose Input/Output	IO	D6
gpio4_26	General-Purpose Input/Output	IO	C5
gpio4_27	General-Purpose Input/Output	IO	A3
gpio4_28	General-Purpose Input/Output	IO	B3
gpio4_29	General-Purpose Input/Output	IO	B4
gpio4_30	General-Purpose Input/Output	IO	B5
gpio4_31	General-Purpose Input/Output	IO	A4
GPIO 5			
gpio5_0	General-Purpose Input/Output	IO	B14
gpio5_1	General-Purpose Input/Output	IO	J14
gpio5_2	General-Purpose Input/Output	IO	G12
gpio5_3	General-Purpose Input/Output	IO	F12
gpio5_4	General-Purpose Input/Output	IO	G13
gpio5_5	General-Purpose Input/Output	IO	J11
gpio5_6	General-Purpose Input/Output	IO	E12
gpio5_7	General-Purpose Input/Output	IO	F13

Copyright © 2015–2019, Texas Instruments Incorporated

表 4-23. GPIOs Signal Descriptions (continued)

SIGNAL NAME	DESCRIPTION	TYPE	BALL
gpio5_8	General-Purpose Input/Output	IO	C12
gpio5_9	General-Purpose Input/Output	IO	D12
gpio5_10	General-Purpose Input/Output	IO	B12
gpio5_11	General-Purpose Input/Output	IO	A11
gpio5_12	General-Purpose Input/Output	IO	B13
gpio5_13	General-Purpose Input/Output	IO	B18
gpio5_14	General-Purpose Input/Output	IO	F15
gpio5_15	General-Purpose Input/Output	IO	V1
gpio5_16	General-Purpose Input/Output	IO	U4
gpio5_17	General-Purpose Input/Output	IO	U3
gpio5_18	General-Purpose Input/Output	IO	V2
gpio5_19	General-Purpose Input/Output	IO	Y1
gpio5_20	General-Purpose Input/Output	IO	W9
gpio5_21	General-Purpose Input/Output	IO	V9
gpio5_22	General-Purpose Input/Output	IO	V7
gpio5_23	General-Purpose Input/Output	IO	U7
gpio5_24	General-Purpose Input/Output	IO	V6
gpio5_25	General-Purpose Input/Output	IO	U6
gpio5_26	General-Purpose Input/Output	IO	U5
gpio5_27	General-Purpose Input/Output	IO	V5
gpio5_28	General-Purpose Input/Output	IO	V4
gpio5_29	General-Purpose Input/Output	IO	V3
gpio5_30	General-Purpose Input/Output	IO	Y2
gpio5_31	General-Purpose Input/Output	IO	W2
GPIO 6			
gpio6_4	General-Purpose Input/Output	IO	A13
gpio6_5	General-Purpose Input/Output	IO	G14
gpio6_6	General-Purpose Input/Output	IO	F14
gpio6_7	General-Purpose Input/Output	IO	B16
gpio6_8	General-Purpose Input/Output	IO	C15
gpio6_9	General-Purpose Input/Output	IO	A16
gpio6_10	General-Purpose Input/Output	IO	AC5
gpio6_11	General-Purpose Input/Output	IO	AB4
gpio6_12	General-Purpose Input/Output	IO	AB10
gpio6_13	General-Purpose Input/Output	IO	AC10
gpio6_14	General-Purpose Input/Output	IO	E21
gpio6_15	General-Purpose Input/Output	IO	F20
gpio6_16	General-Purpose Input/Output	IO	F21
gpio6_17	General-Purpose Input/Output	IO	D18
gpio6_18	General-Purpose Input/Output	IO	E17
gpio6_19	General-Purpose Input/Output	IO	B26
gpio6_20	General-Purpose Input/Output	IO	C23
gpio6_21	General-Purpose Input/Output	IO	W6
gpio6_22	General-Purpose Input/Output	IO	Y6
gpio6_23	General-Purpose Input/Output	IO	AA6
gpio6_24	General-Purpose Input/Output	IO	Y4
gpio6_25	General-Purpose Input/Output	IO	AA5

Copyright © 2015–2019, Texas Instruments Incorporated

表 4-23. GPIOs Signal Descriptions (continued)

SIGNAL NAME	DESCRIPTION	TYPE	BALL
gpio6_26	General-Purpose Input/Output	IO	Y3
gpio6_27	General-Purpose Input/Output	IO	W7
gpio6_28	General-Purpose Input/Output	IO	Y9
gpio6_29	General-Purpose Input/Output	IO	AD4
gpio6_30	General-Purpose Input/Output	IO	AC4
gpio6_31	General-Purpose Input/Output	IO	AC7
GPIO 7			
gpio7_0	General-Purpose Input/Output	IO	AC6
gpio7_1	General-Purpose Input/Output	IO	AC9
gpio7_2	General-Purpose Input/Output	IO	AC3
gpio7_3	General-Purpose Input/Output	IO	R6
gpio7_4	General-Purpose Input/Output	IO	T9
gpio7_5	General-Purpose Input/Output	IO	T6
gpio7_6	General-Purpose Input/Output	IO	T7
gpio7_7	General-Purpose Input/Output	IO	A25
gpio7_8	General-Purpose Input/Output	IO	F16
gpio7_9	General-Purpose Input/Output	IO	B25
gpio7_10	General-Purpose Input/Output	IO	A24
gpio7_11	General-Purpose Input/Output	IO	A22
gpio7_12	General-Purpose Input/Output	IO	B21
gpio7_13	General-Purpose Input/Output	IO	B20
gpio7_14	General-Purpose Input/Output	IO	A26
gpio7_15	General-Purpose Input/Output	IO	B22
gpio7_16	General-Purpose Input/Output	IO	G17
gpio7_17	General-Purpose Input/Output	IO	B24
gpio7_18	General-Purpose Input/Output	IO	L1
gpio7_19	General-Purpose Input/Output	IO	K2
gpio7_22	General-Purpose Input/Output	IO	B27
gpio7_23	General-Purpose Input/Output	IO	C26
gpio7_24	General-Purpose Input/Output	IO	E25
gpio7_25	General-Purpose Input/Output	IO	C27
gpio7_26	General-Purpose Input/Output	IO	D28
gpio7_27	General-Purpose Input/Output	IO	D26
gpio7_28	General-Purpose Input/Output	IO	J1
gpio7_29	General-Purpose Input/Output	IO	J2
gpio7_30	General-Purpose Input/Output	IO	D14
gpio7_31	General-Purpose Input/Output	IO	C14
GPIO 8			
gpio8_0	General-Purpose Input/Output	IO	F11
gpio8_1	General-Purpose Input/Output	IO	G10
gpio8_2	General-Purpose Input/Output	IO	F10
gpio8_3	General-Purpose Input/Output	IO	G11
gpio8_4	General-Purpose Input/Output	IO	E9
gpio8_5	General-Purpose Input/Output	IO	F9
gpio8_6	General-Purpose Input/Output	IO	F8
gpio8_7	General-Purpose Input/Output	IO	E7
gpio8_8	General-Purpose Input/Output	IO	E8

Copyright © 2015–2019, Texas Instruments Incorporated

表 4-23. GPIOs Signal Descriptions (continued)

SIGNAL NAME	DESCRIPTION	TYPE	BALL
gpio8_9	General-Purpose Input/Output	IO	D9
gpio8_10	General-Purpose Input/Output	IO	D7
gpio8_11	General-Purpose Input/Output	IO	D8
gpio8_12	General-Purpose Input/Output	IO	A5
gpio8_13	General-Purpose Input/Output	IO	C6
gpio8_14	General-Purpose Input/Output	IO	C8
gpio8_15	General-Purpose Input/Output	IO	C7
gpio8_16	General-Purpose Input/Output	IO	B7
gpio8_17	General-Purpose Input/Output	IO	B8
gpio8_18	General-Purpose Input/Output	IO	A7
gpio8_19	General-Purpose Input/Output	IO	A8
gpio8_20	General-Purpose Input/Output	IO	C9
gpio8_21	General-Purpose Input/Output	IO	A9
gpio8_22	General-Purpose Input/Output	IO	B9
gpio8_23	General-Purpose Input/Output	IO	A10
gpio8_27	General-Purpose Input	I	D23
gpio8_28	General-Purpose Input/Output	IO	F19
gpio8_29	General-Purpose Input/Output	IO	E18
gpio8_30(1)	General-Purpose Input/Output	IO	G21
gpio8_31(1)	General-Purpose Input/Output	IO	D24

(1) gpio8_30 is multiplexed with EMU0 and gpio8_31 is multiplexed with EMU1. These pins will be sampled at reset release by the test and emulation logic. Therefore, if they are used as GPIO pins, they must return to the high state whenever the device enters reset. This can be controlled by logic driven from rstoutn. After the device exits reset (indicated by rstoutn rising), these can return to GPIO mode.

4.4.21 Keyboard controller (KBD)

注: For more information, see Keyboard Controller section of the device TRM.

表 4-24. Keyboard Signal Descriptions

SIGNAL NAME	DESCRIPTION	TYPE	BALL
kbd_row0	Keypad row 0	I	AD9/ E1
kbd_row1	Keypad row 1	I	AF9/ G2
kbd_row2	Keypad row 2	I	AG4/ G1
kbd_row3	Keypad row 3	I	AG2/ G6
kbd_row4	Keypad row 4	I	AG3/ F2
kbd_row5	Keypad row 5	I	AG5/ F3
kbd_row6	Keypad row 6	I	AF2/ D1
kbd_row7	Keypad row 7	I	AF6/ F6
kbd_row8	Keypad row 8	I	AF3/ C2
kbd_col0	Keypad column 0	O	AF4/ E2
kbd_col1	Keypad column 1	O	AF1/ D2
kbd_col2	Keypad column 2	O	AE3/ F4
kbd_col3	Keypad column 3	O	AE5/ C1
kbd_col4	Keypad column 4	O	AE1/ E4
kbd_col5	Keypad column 5	O	AE2/ F5
kbd_col6	Keypad column 6	O	AE6/ E6
kbd_col7	Keypad column 7	O	AD2/ D3

Copyright © 2015–2019, Texas Instruments Incorporated

表 4-24. Keyboard Signal Descriptions (continued)

SIGNAL NAME	DESCRIPTION	TYPE	BALL
kbd_col8	Keypad column 8	O	AD3/ D5

4.4.22 Pulse Width Modulation (PWM)

注: For more information, see the Pulse-Width Modulation (PWM) subsystem section of the device TRM.

表 4-25. PWM Signal Descriptions

SIGNAL NAME	DESCRIPTION	TYPE	BALL
PWMSS1			
eQEP1A_in	EQEP1 Quadrature Input A	I	E1/ AD9
eQEP1B_in	EQEP1 Quadrature Input B	I	G2/ AF9
eQEP1_index	EQEP1 Index Input	IO	AE9/ H7
eQEP1_strobe	EQEP1 Strobe Input	IO	G1/ AF8
ehrpwm1A	EHRPWM1 Output A	O	AE8/ G6
ehrpwm1B	EHRPWM1 Output B	O	AD8/ F2
ehrpwm1_tripzone_input	EHRPWM1 Trip Zone Input	IO	AG7/ F3
eCAP1_in_PWM1_out	ECAP1 Capture Input / PWM Output	IO	AH6/ D1
ehrpwm1_synci	EHRPWM1 Sync Input	I	AH3/ E2
ehrpwm1_synco	EHRPWM1 Sync Output	O	AH5/ D2
PWMSS2			
eQEP2A_in	EQEP2 Quadrature Input A	I	AG6/ F4
eQEP2B_in	EQEP2 Quadrature Input B	I	AH4/ C1
eQEP2_index	EQEP2 Index Input	IO	AG4/ E4
eQEP2_strobe	EQEP2 Strobe Input	IO	AG2/ F5
ehrpwm2A	EHRPWM2 Output A	O	AC5/ E6
ehrpwm2B	EHRPWM2 Output B	O	AB4/ D3
ehrpwm2_tripzone_input	EHRPWM2 Trip Zone Input	IO	AD4/ F6
eCAP2_in_PWM2_out	ECAP2 Capture Input / PWM Output	IO	AC4/ D5
PWMSS3			
eQEP3A_in	EQEP3 Quadrature Input A	I	AC7/ C2
eQEP3B_in	EQEP3 Quadrature Input B	I	AC6/ C3
eQEP3_index	EQEP3 Index Input	IO	AC9/ C4
eQEP3_strobe	EQEP3 Strobe Input	IO	AC3/ B2
ehrpwm3A	EHRPWM3 Output A	O	AC8/ D6
ehrpwm3B	EHRPWM3 Output B	O	AD6/ C5
ehrpwm3_tripzone_input	EHRPWM3 Trip Zone Input	IO	AB8/ A3
eCAP3_in_PWM3_out	ECAP3 Capture Input / PWM Output	IO	AB5/ B3

Copyright © 2015–2019, Texas Instruments Incorporated

4.4.23 Programmable Real-Time Unit Subsystem and Industrial Communication Subsystem (PRU-ICSS)

> 注意
>
> The I/O timings provided in 7, *Timing Requirements and Switching Characteristics* are valid only if signals within a single IOSET are used. The IOSETs are defined in the 表 7-154 and 表 7-155.

注: For more information see the Programmable Real-Time Unit Subsystem and Industrial Communication Subsystem section of the device TRM.

表 4-26. PRU-ICSS Signal Descriptions

SIGNAL NAME	DESCRIPTION	TYPE	BALL BOTTOM
PRU-ICSS 1			
pr1_pru0_gpo0	PRU0 General-Purpose Output	O	AH6
pr1_pru0_gpo1	PRU0 General-Purpose Output	O	AH3
pr1_pru0_gpo2	PRU0 General-Purpose Output	O	AH5
pr1_pru0_gpo3	PRU0 General-Purpose Output	O	AG6
pr1_pru0_gpo4	PRU0 General-Purpose Output	O	AH4
pr1_pru0_gpo5	PRU0 General-Purpose Output	O	AG4
pr1_pru0_gpo6	PRU0 General-Purpose Output	O	AG2
pr1_pru0_gpo7	PRU0 General-Purpose Output	O	AG3
pr1_pru0_gpo8	PRU0 General-Purpose Output	O	AG5
pr1_pru0_gpo9	PRU0 General-Purpose Output	O	AF2
pr1_pru0_gpo10	PRU0 General-Purpose Output	O	AF6
pr1_pru0_gpo11	PRU0 General-Purpose Output	O	AF3
pr1_pru0_gpo12	PRU0 General-Purpose Output	O	AF4
pr1_pru0_gpo13	PRU0 General-Purpose Output	O	AF1
pr1_pru0_gpo14	PRU0 General-Purpose Output	O	AE3
pr1_pru0_gpo15	PRU0 General-Purpose Output	O	AE5
pr1_pru0_gpo16	PRU0 General-Purpose Output	O	AE1
pr1_pru0_gpo17	PRU0 General-Purpose Output	O	AE2
pr1_pru0_gpo18	PRU0 General-Purpose Output	O	AE6
pr1_pru0_gpo19	PRU0 General-Purpose Output	O	AD2
pr1_pru0_gpo20	PRU0 General-Purpose Output	O	AD3
pr1_pru0_gpi0	PRU0 General-Purpose Input	I	AH6
pr1_pru0_gpi1	PRU0 General-Purpose Input	I	AH3
pr1_pru0_gpi2	PRU0 General-Purpose Input	I	AH5
pr1_pru0_gpi3	PRU0 General-Purpose Input	I	AG6
pr1_pru0_gpi4	PRU0 General-Purpose Input	I	AH4
pr1_pru0_gpi5	PRU0 General-Purpose Input	I	AG4
pr1_pru0_gpi6	PRU0 General-Purpose Input	I	AG2
pr1_pru0_gpi7	PRU0 General-Purpose Input	I	AG3
pr1_pru0_gpi8	PRU0 General-Purpose Input	I	AG5
pr1_pru0_gpi9	PRU0 General-Purpose Input	I	AF2
pr1_pru0_gpi10	PRU0 General-Purpose Input	I	AF6

Copyright © 2015–2019, Texas Instruments Incorporated

表 4-26. PRU-ICSS Signal Descriptions (continued)

SIGNAL NAME	DESCRIPTION	TYPE	BALL BOTTOM
pr1_pru0_gpi11	PRU0 General-Purpose Input	I	AF3
pr1_pru0_gpi12	PRU0 General-Purpose Input	I	AF4
pr1_pru0_gpi13	PRU0 General-Purpose Input	I	AF1
pr1_pru0_gpi14	PRU0 General-Purpose Input	I	AE3
pr1_pru0_gpi15	PRU0 General-Purpose Input	I	AE5
pr1_pru0_gpi16	PRU0 General-Purpose Input	I	AE1
pr1_pru0_gpi17	PRU0 General-Purpose Input	I	AE2
pr1_pru0_gpi18	PRU0 General-Purpose Input	I	AE6
pr1_pru0_gpi19	PRU0 General-Purpose Input	I	AD2
pr1_pru0_gpi20	PRU0 General-Purpose Input	I	AD3
pr1_pru1_gpo0	PRU1 General-Purpose Output	O	E2
pr1_pru1_gpo1	PRU1 General-Purpose Output	O	D2
pr1_pru1_gpo2	PRU1 General-Purpose Output	O	F4
pr1_pru1_gpo3	PRU1 General-Purpose Output	O	C1
pr1_pru1_gpo4	PRU1 General-Purpose Output	O	E4
pr1_pru1_gpo5	PRU1 General-Purpose Output	O	F5
pr1_pru1_gpo6	PRU1 General-Purpose Output	O	E6
pr1_pru1_gpo7	PRU1 General-Purpose Output	O	D3
pr1_pru1_gpo8	PRU1 General-Purpose Output	O	F6
pr1_pru1_gpo9	PRU1 General-Purpose Output	O	D5
pr1_pru1_gpo10	PRU1 General-Purpose Output	O	C2
pr1_pru1_gpo11	PRU1 General-Purpose Output	O	C3
pr1_pru1_gpo12	PRU1 General-Purpose Output	O	C4
pr1_pru1_gpo13	PRU1 General-Purpose Output	O	B2
pr1_pru1_gpo14	PRU1 General-Purpose Output	O	D6
pr1_pru1_gpo15	PRU1 General-Purpose Output	O	C5
pr1_pru1_gpo16	PRU1 General-Purpose Output	O	A3
pr1_pru1_gpo17	PRU1 General-Purpose Output	O	B3
pr1_pru1_gpo18	PRU1 General-Purpose Output	O	B4
pr1_pru1_gpo19	PRU1 General-Purpose Output	O	B5
pr1_pru1_gpo20	PRU1 General-Purpose Output	O	A4
pr1_pru1_gpi0	PRU1 General-Purpose Input	I	E2
pr1_pru1_gpi1	PRU1 General-Purpose Input	I	D2
pr1_pru1_gpi2	PRU1 General-Purpose Input	I	F4
pr1_pru1_gpi3	PRU1 General-Purpose Input	I	C1
pr1_pru1_gpi4	PRU1 General-Purpose Input	I	E4
pr1_pru1_gpi5	PRU1 General-Purpose Input	I	F5
pr1_pru1_gpi6	PRU1 General-Purpose Input	I	E6
pr1_pru1_gpi7	PRU1 General-Purpose Input	I	D3
pr1_pru1_gpi8	PRU1 General-Purpose Input	I	F6
pr1_pru1_gpi9	PRU1 General-Purpose Input	I	D5
pr1_pru1_gpi10	PRU1 General-Purpose Input	I	C2
pr1_pru1_gpi11	PRU1 General-Purpose Input	I	C3
pr1_pru1_gpi12	PRU1 General-Purpose Input	I	C4
pr1_pru1_gpi13	PRU1 General-Purpose Input	I	B2
pr1_pru1_gpi14	PRU1 General-Purpose Input	I	D6
pr1_pru1_gpi15	PRU1 General-Purpose Input	I	C5

Copyright © 2015–2019, Texas Instruments Incorporated

表 4-26. PRU-ICSS Signal Descriptions (continued)

SIGNAL NAME	DESCRIPTION	TYPE	BALL BOTTOM
pr1_pru1_gpi16	PRU1 General-Purpose Input	I	A3
pr1_pru1_gpi17	PRU1 General-Purpose Input	I	B3
pr1_pru1_gpi18	PRU1 General-Purpose Input	I	B4
pr1_pru1_gpi19	PRU1 General-Purpose Input	I	B5
pr1_pru1_gpi20	PRU1 General-Purpose Input	I	A4
pr1_mii_mt0_clk	MII0 Transmit Clock	I	U5
pr1_mii0_txen	MII0 Transmit Enable	O	V3
pr1_mii0_txd3	MII0 Transmit Data	O	V5
pr1_mii0_txd2	MII0 Transmit Data	O	V4
pr1_mii0_txd1	MII0 Transmit Data	O	Y2
pr1_mii0_txd0	MII0 Transmit Data	O	W2
pr1_mii0_rxdv	MII0 Data Valid	I	V2
pr1_mii_mr0_clk	MII0 Receive Clock	I	Y1
pr1_mii0_rxd3	MII0 Receive Data	I	W9
pr1_mii0_rxd2	MII0 Receive Data	I	V9
pr1_mii0_crs	MII0 Carrier Sense	I	V7
pr1_mii0_rxer	MII0 Receive Error	I	U7
pr1_mii0_rxd1	MII0 Receive Data	I	V6
pr1_mii0_rxd0	MII0 Receive Data	I	U6
pr1_mii0_col	MII0 Collision Detect	I	V1
pr1_mii0_rxlink	MII0 Receive Link	I	U4
pr1_mii_mt1_clk	MII1 Transmit Clock	I	C1
pr1_mii1_txen	MII1 Transmit Enable	O	E4
pr1_mii1_txd3	MII1 Transmit Data	O	F5
pr1_mii1_txd2	MII1 Transmit Data	O	E6
pr1_mii1_txd1	MII1 Transmit Data	O	D5
pr1_mii1_txd0	MII1 Transmit Data	O	C2
pr1_mii_mr1_clk	MII1 Receive Clock	I	C3
pr1_mii1_rxdv	MII1 Data Valid	I	C4
pr1_mii1_rxd3	MII1 Receive Data	I	B2
pr1_mii1_rxd2	MII1 Receive Data	I	D6
pr1_mii1_rxd1	MII1 Receive Data	I	C5
pr1_mii1_rxd0	MII1 Receive Data	I	A3
pr1_mii1_rxer	MII1 Receive Error	I	B3
pr1_mii1_rxlink	MII1 Receive Link	I	B4
pr1_mii1_col	MII1 Collision Detect	I	B5
pr1_mii1_crs	MII1 Carrier Sense	I	A4
pr1_mdio_mdclk	MDIO Clock	O	D3
pr1_mdio_data	MDIO Data	IO	F6
pr1_edc_latch0_in	Latch Input 0	I	AG3/ E2
pr1_edc_latch1_in	Latch Input 1	I	AG5
pr1_edc_sync0_out	SYNC 0 Output	O	AF2/ D2
pr1_edc_sync1_out	SYNC 1 Output	O	AF6
pr1_edio_latch_in	Latch Input	I	AF3
pr1_edio_sof	Start Of Frame	O	AF4/ F4
pr1_edio_data_in0	Ethernet Digital Input	I	AF1/ E1
pr1_edio_data_in1	Ethernet Digital Input	I	AE3/ G2

Copyright © 2015–2019, Texas Instruments Incorporated

表 4-26. PRU-ICSS Signal Descriptions (continued)

SIGNAL NAME	DESCRIPTION	TYPE	BALL BOTTOM
pr1_edio_data_in2	Ethernet Digital Input	I	AE5/ H7
pr1_edio_data_in3	Ethernet Digital Input	I	AE1/ G1
pr1_edio_data_in4	Ethernet Digital Input	I	AE2/ G6
pr1_edio_data_in5	Ethernet Digital Input	I	AE6/ F2
pr1_edio_data_in6	Ethernet Digital Input	I	AD2/ F3
pr1_edio_data_in7	Ethernet Digital Input	I	AD3/ D1
pr1_edio_data_out0	Ethernet Digital Output	O	AF1/ E1
pr1_edio_data_out1	Ethernet Digital Output	O	AE3/ G2
pr1_edio_data_out2	Ethernet Digital Output	O	AE5/ H7
pr1_edio_data_out3	Ethernet Digital Output	O	AE1/ G1
pr1_edio_data_out4	Ethernet Digital Output	O	AE2/ G6
pr1_edio_data_out5	Ethernet Digital Output	O	AE6/ F2
pr1_edio_data_out6	Ethernet Digital Output	O	AD2/ F3
pr1_edio_data_out7	Ethernet Digital Output	O	AD3/ D1
pr1_uart0_cts_n	UART Clear-To-Send	I	G1/ F11
pr1_uart0_rts_n	UART Ready-To-Send	O	G6/ G10
pr1_uart0_rxd	UART Receive Data	I	F2/ F10
pr1_uart0_txd	UART Transmit Data	O	F3/ G11
pr1_ecap0_ecap_capin_apwm_o	Capture Input / PWM output	IO	D1/ E9
PRU-ICSS 2			
pr2_pru0_gpo0	PRU0 General-Purpose Output	O	G11/ AC5
pr2_pru0_gpo1	PRU0 General-Purpose Output	O	E9/ AB4
pr2_pru0_gpo2	PRU0 General-Purpose Output	O	F9/ AD4
pr2_pru0_gpo3	PRU0 General-Purpose Output	O	F8/ AC4
pr2_pru0_gpo4	PRU0 General-Purpose Output	O	E7/ AC7
pr2_pru0_gpo5	PRU0 General-Purpose Output	O	E8/ AC6
pr2_pru0_gpo6	PRU0 General-Purpose Output	O	D9/ AC9
pr2_pru0_gpo7	PRU0 General-Purpose Output	O	D7/ AC3
pr2_pru0_gpo8	PRU0 General-Purpose Output	O	D8/ AC8
pr2_pru0_gpo9	PRU0 General-Purpose Output	O	A5/ AD6
pr2_pru0_gpo10	PRU0 General-Purpose Output	O	C6/ AB8
pr2_pru0_gpo11	PRU0 General-Purpose Output	O	C8/ AB5
pr2_pru0_gpo12	PRU0 General-Purpose Output	O	C7/ B18
pr2_pru0_gpo13	PRU0 General-Purpose Output	O	B7/ F15
pr2_pru0_gpo14	PRU0 General-Purpose Output	O	B8/ B19
pr2_pru0_gpo15	PRU0 General-Purpose Output	O	A7/ C17
pr2_pru0_gpo16	PRU0 General-Purpose Output	O	A8/ C15
pr2_pru0_gpo17	PRU0 General-Purpose Output	O	C9/ A16
pr2_pru0_gpo18	PRU0 General-Purpose Output	O	A9/ A19
pr2_pru0_gpo19	PRU0 General-Purpose Output	O	B9/ A18
pr2_pru0_gpo20	PRU0 General-Purpose Output	O	A10/ F14
pr2_pru0_gpi0	PRU0 General-Purpose Input	I	G11/ AC5
pr2_pru0_gpi1	PRU0 General-Purpose Input	I	E9/ AB4
pr2_pru0_gpi2	PRU0 General-Purpose Input	I	F9/ AD4
pr2_pru0_gpi3	PRU0 General-Purpose Input	I	F8/ AC4
pr2_pru0_gpi4	PRU0 General-Purpose Input	I	E7/ AC7
pr2_pru0_gpi5	PRU0 General-Purpose Input	I	E8/ AC6

Copyright © 2015–2019, Texas Instruments Incorporated

表 4-26. PRU-ICSS Signal Descriptions (continued)

SIGNAL NAME	DESCRIPTION	TYPE	BALL BOTTOM
pr2_pru0_gpi6	PRU0 General-Purpose Input	I	D9/ AC9
pr2_pru0_gpi7	PRU0 General-Purpose Input	I	D7/ AC3
pr2_pru0_gpi8	PRU0 General-Purpose Input	I	D8/ AC8
pr2_pru0_gpi9	PRU0 General-Purpose Input	I	A5/ AD6
pr2_pru0_gpi10	PRU0 General-Purpose Input	I	C6/ AB8
pr2_pru0_gpi11	PRU0 General-Purpose Input	I	C8/ AB5
pr2_pru0_gpi12	PRU0 General-Purpose Input	I	C7/ B18
pr2_pru0_gpi13	PRU0 General-Purpose Input	I	B7/ F15
pr2_pru0_gpi14	PRU0 General-Purpose Input	I	B8/ B19
pr2_pru0_gpi15	PRU0 General-Purpose Input	I	A7/ C17
pr2_pru0_gpi16	PRU0 General-Purpose Input	I	A8/ C15
pr2_pru0_gpi17	PRU0 General-Purpose Input	I	C9/ A16
pr2_pru0_gpi18	PRU0 General-Purpose Input	I	A9/ A19
pr2_pru0_gpi19	PRU0 General-Purpose Input	I	B9/ A18
pr2_pru0_gpi20	PRU0 General-Purpose Input	I	A10/ F14
pr2_pru1_gpo0	PRU1 General-Purpose Output	O	V1/ D17
pr2_pru1_gpo1	PRU1 General-Purpose Output	O	U4/ AA3
pr2_pru1_gpo2	PRU1 General-Purpose Output	O	U3/ AB9
pr2_pru1_gpo3	PRU1 General-Purpose Output	O	V2/ AB3
pr2_pru1_gpo4	PRU1 General-Purpose Output	O	Y1/ AA4
pr2_pru1_gpo5	PRU1 General-Purpose Output	O	W9/ D18
pr2_pru1_gpo6	PRU1 General-Purpose Output	O	V9/ E17
pr2_pru1_gpo7	PRU1 General-Purpose Output	O	V7/ C14
pr2_pru1_gpo8	PRU1 General-Purpose Output	O	U7/ G12
pr2_pru1_gpo9	PRU1 General-Purpose Output	O	V6/ F12
pr2_pru1_gpo10	PRU1 General-Purpose Output	O	U6/ B12
pr2_pru1_gpo11	PRU1 General-Purpose Output	O	U5/ A11
pr2_pru1_gpo12	PRU1 General-Purpose Output	O	V5/ B13
pr2_pru1_gpo13	PRU1 General-Purpose Output	O	V4/ A12
pr2_pru1_gpo14	PRU1 General-Purpose Output	O	V3/ E14
pr2_pru1_gpo15	PRU1 General-Purpose Output	O	Y2/ A13
pr2_pru1_gpo16	PRU1 General-Purpose Output	O	W2/ G14
pr2_pru1_gpo17	PRU1 General-Purpose Output	O	E11
pr2_pru1_gpo18	PRU1 General-Purpose Output	O	F11
pr2_pru1_gpo19	PRU1 General-Purpose Output	O	G10
pr2_pru1_gpo20	PRU1 General-Purpose Output	O	F10
pr2_pru1_gpi0	PRU1 General-Purpose Input	I	V1/ D17
pr2_pru1_gpi1	PRU1 General-Purpose Input	I	U4/ AA3
pr2_pru1_gpi2	PRU1 General-Purpose Input	I	U3/ AB9
pr2_pru1_gpi3	PRU1 General-Purpose Input	I	V2/ AB3
pr2_pru1_gpi4	PRU1 General-Purpose Input	I	Y1/ AA4
pr2_pru1_gpi5	PRU1 General-Purpose Input	I	W9/ D18
pr2_pru1_gpi6	PRU1 General-Purpose Input	I	V9/ E17
pr2_pru1_gpi7	PRU1 General-Purpose Input	I	V7 / C14
pr2_pru1_gpi8	PRU1 General-Purpose Input	I	U7 / G12
pr2_pru1_gpi9	PRU1 General-Purpose Input	I	V6 / F12
pr2_pru1_gpi10	PRU1 General-Purpose Input	I	U6 / B12

Copyright © 2015–2019, Texas Instruments Incorporated

表 4-26. PRU-ICSS Signal Descriptions (continued)

SIGNAL NAME	DESCRIPTION	TYPE	BALL BOTTOM
pr2_pru1_gpi11	PRU1 General-Purpose Input	I	U5 / A11
pr2_pru1_gpi12	PRU1 General-Purpose Input	I	V5 / B13
pr2_pru1_gpi13	PRU1 General-Purpose Input	I	V4 / A12
pr2_pru1_gpi14	PRU1 General-Purpose Input	I	V3 / E14
pr2_pru1_gpi15	PRU1 General-Purpose Input	I	Y2 / A13
pr2_pru1_gpi16	PRU1 General-Purpose Input	I	W2 / G14
pr2_pru1_gpi17	PRU1 General-Purpose Input	I	E11
pr2_pru1_gpi18	PRU1 General-Purpose Input	I	F11
pr2_pru1_gpi19	PRU1 General-Purpose Input	I	G10
pr2_pru1_gpi20	PRU1 General-Purpose Input	I	F10
pr2_edc_latch0_in	Latch Input 0	I	F9
pr2_edc_latch1_in	Latch Input 1	I	F8
pr2_edc_sync0_out	SYNC 0 Output	O	E7
pr2_edc_sync1_out	SYNC 1 Output	O	E8
pr2_edio_latch_in	Latch Input	I	D9
pr2_edio_sof	Start Of Frame	O	D7
pr2_uart0_cts_n	UART Clear-To-Send	I	D8
pr2_uart0_rts_n	UART Ready-To-Send	O	A5
pr2_uart0_rxd	UART Receive Data	I	C6
pr2_uart0_txd	UART Transmit Data	O	C8
pr2_ecap0_ecap_capin_apwm_o	Capture Input / PWM output	IO	C7
pr2_edio_data_in0	Ethernet Digital Input	I	B7
pr2_edio_data_in1	Ethernet Digital Input	I	B8
pr2_edio_data_in2	Ethernet Digital Input	I	A7
pr2_edio_data_in3	Ethernet Digital Input	I	A8
pr2_edio_data_in4	Ethernet Digital Input	I	C9
pr2_edio_data_in5	Ethernet Digital Input	I	A9
pr2_edio_data_in6	Ethernet Digital Input	I	B9
pr2_edio_data_in7	Ethernet Digital Input	I	A10
pr2_edio_data_out0	Ethernet Digital Output	O	B7
pr2_edio_data_out1	Ethernet Digital Output	O	B8
pr2_edio_data_out2	Ethernet Digital Output	O	A7
pr2_edio_data_out3	Ethernet Digital Output	O	A8
pr2_edio_data_out4	Ethernet Digital Output	O	C9
pr2_edio_data_out5	Ethernet Digital Output	O	A9
pr2_edio_data_out6	Ethernet Digital Output	O	B9
pr2_edio_data_out7	Ethernet Digital Output	O	A10
pr2_mii1_col	MII1 Collision Detect	I	D18
pr2_mii1_crs	MII1 Carrier Sense	I	E17
pr2_mdio_mdclk	MDIO Clock	O	C14/ AB3
pr2_mdio_data	MDIO Data	IO	D14/ AA4
pr2_mii0_rxer	MII0 Receive Error	I	G12
pr2_mii_mt0_clk	MII0 Transmit Clock	I	F12
pr2_mii0_txen	MII0 Transmit Enable	O	B12
pr2_mii0_txd3	MII0 Transmit Data	O	A11
pr2_mii0_txd2	MII0 Transmit Data	O	B13
pr2_mii0_txd1	MII0 Transmit Data	O	A12

Copyright © 2015–2019, Texas Instruments Incorporated

表 4-26. PRU-ICSS Signal Descriptions (continued)

SIGNAL NAME	DESCRIPTION	TYPE	BALL BOTTOM
pr2_mii0_txd0	MII0 Transmit Data	O	E14
pr2_mii_mr0_clk	MII0 Receive Clock	I	A13
pr2_mii0_rxdv	MII0 Data Valid	I	G14
pr2_mii0_rxd3	MII0 Receive Data	I	F14
pr2_mii0_rxd2	MII0 Receive Data	I	A19
pr2_mii0_rxd1	MII0 Receive Data	I	A18
pr2_mii0_rxd0	MII0 Receive Data	I	C15
pr2_mii0_rxlink	MII0 Receive Link	I	A16
pr2_mii0_crs	MII0 Carrier Sense	I	B18
pr2_mii0_col	MII0 Collision Detect	I	F15
pr2_mii1_rxer	MII1 Receive Error	I	B19
pr2_mii1_rxlink	MII1 Receive Link	I	C17
pr2_mii_mt1_clk	MII1 Transmit Clock	I	AC5
pr2_mii1_txen	MII1 Transmit Enable	O	AB4
pr2_mii1_txd3	MII1 Transmit Data	O	AD4
pr2_mii1_txd2	MII1 Transmit Data	O	AC4
pr2_mii1_txd1	MII1 Transmit Data	O	AC7
pr2_mii1_txd0	MII1 Transmit Data	O	AC6
pr2_mii_mr1_clk	MII1 Receive Clock	I	AC9
pr2_mii1_rxdv	MII1 Data Valid	I	AC3
pr2_mii1_rxd3	MII1 Receive Data	I	AC8
pr2_mii1_rxd2	MII1 Receive Data	I	AD6
pr2_mii1_rxd1	MII1 Receive Data	I	AB8
pr2_mii1_rxd0	MII1 Receive Data	I	AB5

注: PRU-ICSS has internal multiplexing capability of pin functions. See *PRU-ICSS EGPIO Internal Pinmux* in device TRM. Besides, EGPIO module can be configured to export additional functions to EGPIO pins in place of simple GPIO. See *Enhanced General-Purpose Module/Serial Capture Unit* in device TRM.

4.4.24 Test Interfaces

注意

The I/O timings provided in 7, *Timing Requirements and Switching Characteristics* are valid only if signals within a single IOSET are used. The IOSETs are defined in the 表 7-179.

注: For more information, see the On-Chip Debug Support / Debug Ports section of the device TRM.

表 4-27. Debug Signal Descriptions

SIGNAL NAME	DESCRIPTION	TYPE	BALL
tms	JTAG test port mode select. An external pullup resistor should be used on this ball.	IO	F18
tdi	JTAG test data	I	D23

Copyright © 2015–2019, Texas Instruments Incorporated

表 4-27. Debug Signal Descriptions (continued)

SIGNAL NAME	DESCRIPTION	TYPE	BALL
tdo	JTAG test port data	O	F19
tclk	JTAG test clock	I	E20
trstn	JTAG test reset	I	D20
rtck	JTAG return clock	O	E18
emu0[(1)]	Emulator pin 0	IO	G21
emu1[(1)]	Emulator pin 1	IO	D24
emu2	Emulator pin 2	O	F10
emu3	Emulator pin 3	O	D7
emu4	Emulator pin 4	O	A7
emu5	Emulator pin 5	O	E1/ G11
emu6	Emulator pin 6	O	G2/ E9
emu7	Emulator pin 7	O	H7/ F9
emu8	Emulator pin 8	O	G1/ F8
emu9	Emulator pin 9	O	G6/ E7
emu10	Emulator pin 10	O	F2/ D8
emu11	Emulator pin 11	O	F3/ A5
emu12	Emulator pin 12	O	D1/ C6
emu13	Emulator pin 13	O	E2/ C8
emu14	Emulator pin 14	O	D2/ C7
emu15	Emulator pin 15	O	F4/ A8
emu16	Emulator pin 16	O	C1/ C9
emu17	Emulator pin 17	O	E4/ A9
emu18	Emulator pin 18	O	F5/ B9
emu19	Emulator pin 19	O	E6/ A10

(1) EMU0 and EMU1 are multiplexed with GPIO. These pins will be sampled at reset release by the test and emulation logic. Therefore, if they are used as GPIO pins, they must return to the high state whenever the device enters reset. This can be controlled by logic driven from rstoutn. After the device exits reset (indicated by rstoutn rising), these can return to GPIO mode.

4.4.25 System and Miscellaneous

4.4.25.1 Sysboot

注: For more information, see the Initialization (ROM Code) section of the device TRM.

表 4-28. Sysboot Signal Descriptions

SIGNAL NAME	DESCRIPTION	TYPE	BALL
sysboot0	Boot Mode Configuration 0. The value latched on this pin upon porz reset release will determine the boot mode configuration of the device.	I	M6
sysboot1	Boot Mode Configuration 1. The value latched on this pin upon porz reset release will determine the boot mode configuration of the device.	I	M2
sysboot2	Boot Mode Configuration 2. The value latched on this pin upon porz reset release will determine the boot mode configuration of the device.	I	L5
sysboot3	Boot Mode Configuration 3. The value latched on this pin upon porz reset release will determine the boot mode configuration of the device.	I	M1
sysboot4	Boot Mode Configuration 4. The value latched on this pin upon porz reset release will determine the boot mode configuration of the device.	I	L6
sysboot5	Boot Mode Configuration 5. The value latched on this pin upon porz reset release will determine the boot mode configuration of the device.	I	L4
sysboot6	Boot Mode Configuration 6. The value latched on this pin upon porz reset release will determine the boot mode configuration of the device.	I	L3
sysboot7	Boot Mode Configuration 7. The value latched on this pin upon porz reset release will determine the boot mode configuration of the device.	I	L2
sysboot8	Boot Mode Configuration 8. The value latched on this pin upon porz reset release will determine the boot mode configuration of the device.	I	L1
sysboot9	Boot Mode Configuration 9. The value latched on this pin upon porz reset release will determine the boot mode configuration of the device.	I	K2
sysboot10	Boot Mode Configuration 10. The value latched on this pin upon porz reset release will determine the boot mode configuration of the device.	I	J1
sysboot11	Boot Mode Configuration 11. The value latched on this pin upon porz reset release will determine the boot mode configuration of the device.	I	J2
sysboot12	Boot Mode Configuration 12. The value latched on this pin upon porz reset release will determine the boot mode configuration of the device.	I	H1
sysboot13	Boot Mode Configuration 13. The value latched on this pin upon porz reset release will determine the boot mode configuration of the device.	I	J3
sysboot14	Boot Mode Configuration 14. The value latched on this pin upon porz reset release will determine the boot mode configuration of the device.	I	H2
sysboot15	Boot Mode Configuration 15. The value latched on this pin upon porz reset release will determine the boot mode configuration of the device.	I	H3

4.4.25.2 Power, Reset and Clock Management (PRCM)

注: For more information, see PRCM section of the device TRM.

表 4-29. PRCM Signal Descriptions

SIGNAL NAME	DESCRIPTION	TYPE	BALL
clkout1	Device Clock output 1. Can be used externally for devices with non-critical timing requirements, or for debug, or as a reference clock on GPMC as described in 表 7-26 *GPMC/NOR Flash Interface Switching Characteristics - Synchronous Mode - Default* and 表 7-28 *GPMC/NOR Flash Interface Switching Characteristics - Synchronous Mode - Alternate*.	O	F21/ P7
clkout2	Device Clock output 2. Can be used externally for devices with noncritical timing requirements, or for debug.	O	D18/ N1

Copyright © 2015–2019, Texas Instruments Incorporated

表 4-29. PRCM Signal Descriptions (continued)

SIGNAL NAME	DESCRIPTION	TYPE	BALL
clkout3	Device Clock output 3. Can be used externally for devices with noncritical timing requirements, or for debug.	O	C23
rstoutn	Reset out (Active low). This pin asserts low in response to any global reset condition on the device. (2)	O	F23
resetn	Device Reset Input	I	E23
porz	Power on Reset (active low). This pin must be asserted low until all device supplies are valid (see reset sequence/requirements)	I	F22
xref_clk0	External Reference Clock 0. For Audio and other Peripherals.	I	D18
xref_clk1	External Reference Clock 1. For Audio and other Peripherals.	I	E17
xref_clk2	External Reference Clock 2. For Audio and other Peripherals.	I	B26
xref_clk3	External Reference Clock 3. For Audio and other Peripherals.	I	C23
xi_osc0	System Oscillator OSC0 Crystal input / LVCMOS clock input. Functions as the input connection to a crystal when the internal oscillator OSC0 is used. Functions as an LVCMOS-compatible input clock when an external oscillator is used.	I	AE15
xo_osc0	System Oscillator OSC0 Crystal output	O	AD15
xi_osc1	Auxiliary Oscillator OSC1 Crystal input / LVCMOS clock input.Functions as the input connection to a crystal when the internal oscillator OSC1 is used. Functions as an LVCMOS-compatible input clock when an external oscillator is used	I	AC15
xo_osc1	Auxiliary Oscillator OSC1 Crystal output	O	AC13
RMII_MHZ_50_CLK(1)	RMII Reference Clock (50MHz). This pin is an input when external reference is used or output when internal reference is used.	IO	U3

(1) This clock signal is implemented as 'pad loopback' inside the device - the output signal is looped back through the input buffer to serve as the internal reference signal. Series termination is recommended (as close to device pin as possible) to improve signal integrity of the clock input. Any nonmonotonicity in voltage that occurs at the pad loopback clock pin between V_{IH} and V_{IL} must be less than V_{HYS}.

(2) Note that rstoutn is only valid after vddshv3 is valid. If the rstoutn signal will be used as a reset into other devices attached to the SOC, it must be AND'ed with porz. This will prevent glitches occurring during supply ramping being propagated.

4.4.25.3 Real-Time Clock (RTC) Interface

注: For more information, see the Real-Time Clock (RTC) chapter of the device TRM.

注: RTC only mode is not supported feature.

表 4-30. RTC Signal Descriptions

SIGNAL NAME	DESCRIPTION	TYPE	BALL
Wakeup0	RTC External Wakeup Input 0	I	AD17
Wakeup1	RTC External Wakeup Input 1	I	AC17
Wakeup2	RTC External Wakeup Input 2	I	AB16
Wakeup3	RTC External Wakeup Input 3	I	AC16
rtc_porz	RTC Power Domain Power-On Reset Input	I	AB17
rtc_osc_xi_clkin32	RTC Oscillator Input. Crystal connection to internal RTC oscillator. Functions as an RTC clock input when an external oscillator is used.	I	AE14
rtc_osc_xo	RTC Oscillator Output	O	AD14
rtc_iso(1)	RTC Domain Isolation Signal	I	AF14
on_off	RTC Power Enable output pin	O	Y11

(1) This signal must be kept 0 if device power supplies are not valid during RTC mode and 1 during normal operation. This can typically be achieved by connecting rtc_iso to the same signal driving porz (not rtc_porz) with appropriate voltage level translation if necessary.

4.4.25.4 System Direct Memory Access (SDMA)

注: For more information, see the DMA Controllers / System DMA section of the device TRM.

表 4-31. System DMA Signal Descriptions

SIGNAL NAME	DESCRIPTION	TYPE	BALL
dma_evt1	System DMA Event Input 1	I	P7/ P4
dma_evt2	System DMA Event Input 2	I	N1/ R3
dma_evt3	System DMA Event Input 3	I	N6
dma_evt4	System DMA Event Input 4	I	M4

4.4.25.5 Interrupt Controllers (INTC)

注: For more information, see the Interrupt Controllers chapter of the device TRM.

表 4-32. INTC Signal Descriptions

SIGNAL NAME	DESCRIPTION	TYPE	BALL
nmin_dsp	Non maskable interrupt input, active-low. This pin can be optionally routed to the DSP NMI input or as generic input to the Arm cores. Note that by default this pin has an internal pulldown resistor enabled. This internal pulldown should be disabled or countered by a stronger external pullup resistor before routing to the DSP or Arm processors.	I	D21
sys_nirq2	External interrupt event to any device INTC	I	AB16
sys_nirq1	External interrupt event to any device INTC	I	AC16

4.4.25.6 Observability

注: For more information, see the Control Module section of the device TRM.

表 4-33. Observability Signal Descriptions

SIGNAL NAME	DESCRIPTION	TYPE	BALL
obs0	Observation Output 0	O	F10
obs1	Observation Output 1	O	G11
obs2	Observation Output 2	O	E9
obs3	Observation Output 3	O	F9
obs4	Observation Output 4	O	F8
obs5	Observation Output 5	O	D7
obs6	Observation Output 6	O	D8
obs7	Observation Output 7	O	A5
obs8	Observation Output 8	O	C6
obs9	Observation Output 9	O	C8
obs10	Observation Output 10	O	C7
obs11	Observation Output 11	O	A7
obs12	Observation Output 12	O	A8
obs13	Observation Output 13	O	C9

Copyright © 2015–2019, Texas Instruments Incorporated

表 4-33. Observability Signal Descriptions (continued)

SIGNAL NAME	DESCRIPTION	TYPE	BALL
obs14	Observation Output 14	O	A9
obs15	Observation Output 15	O	B9
obs16	Observation Output 16	O	F10
obs17	Observation Output 17	O	G11
obs18	Observation Output 18	O	E9
obs19	Observation Output 19	O	F9
obs20	Observation Output 20	O	F8
obs21	Observation Output 21	O	D7
obs22	Observation Output 22	O	D8
obs23	Observation Output 23	O	A5
obs24	Observation Output 24	O	C6
obs25	Observation Output 25	O	C8
obs26	Observation Output 26	O	C7
obs27	Observation Output 27	O	A7
obs28	Observation Output 28	O	A8
obs29	Observation Output 29	O	C9
obs30	Observation Output 30	O	A9
obs31	Observation Output 31	O	B9
obs_dmarq1	DMA Request External Observation Output 1	O	G11
obs_dmarq2	DMA Request External Observation Output 2	O	D8
obs_irq1	IRQ External Observation Output 1	O	F10
obs_irq2	IRQ External Observation Output 2	O	D7

4.4.25.7 Power Supplies

注: For more information, see Power, Reset, and Clock Management / PRCM Subsystem Environment / External Voltage Inputs section of the device TRM.

表 4-34. Power Supply Signal Descriptions

SIGNAL NAME	DESCRIPTION	TYPE	BALL
vdd	Core voltage domain supply	PWR	H13/ H14/ J17/ J18/ L7/ L8/ N10/ N13/ P11/ P12/ P13/ R11/ R16/ R19/ T13/ T16/ T19/ U8/ U9/ U13/ U16/ V8/ V16

表 4-34. Power Supply Signal Descriptions (continued)

SIGNAL NAME	DESCRIPTION	TYPE	BALL
vss	Ground	GND	A1/ A2/ A6/ A14/ A23/ A28/ B1/ D13/ D19/ E13/ E19/ F1/ F7/ G7/ G8/ G9/ H12/ J12/ J15/ J28/ K1/ K4/ K5/ K15/ K24/ K25/ L13/ L14/ M19/ N14/ N15/ N19/ N24/ N25/ P28/ R1/ R12/ R13/ R15/ R21/ T10/ T11/ T12/ T14/ T15/ T17/ T18/ T21/ U15/ U17/ U20/ U21/ V15/ V17/ W1/ W15/ W24/ W25/ W28/ AA8/ AA9/ AA10/ AA14/ AA15/ AA20/ AB14/ AB20/ AD1/ AD24/ AG1/ AH1/ AH2/ AH8/ AH20/ AH28
vdd_dspeve	DSP voltage domain supply	PWR	J13/ K10/ K11/ K12/ K13/ L10/ L11/ L12/ M10/ M11/ M12/ M13
vdd_iva	IVA voltage domain supply	PWR	U18/ U19/ V18/ V19
vdd_gpu	GPU voltage domain supply	PWR	U11/ U12/ V10/ V11/ V14/ W10/ W11/ W13
vdd_mpu	MPU voltage domain supply	PWR	K17/ K18/ L15/ L16/ L17/ L18/ L19/ M15/ M16/ M17/ M18/ N17/ N18/ P17/ P18/ R18
vdd_rtc	RTC voltage domain supply	PWR	AB15
vdda_usb1	DPLL_USB and HS USB1 1.8V analog power supply	PWR	AA13
vssa_usb	HS USB1 and HS USB2 analog ground	GND	AB11/ AA11
vdda_usb2	HS USB2 1.8V analog power supply	PWR	AB12
vdda33v_usb1	HS USB1 3.3V analog power supply. If USB1 is not used, this pin can alternatively be connected to VSS if the following requirements are met: - The usb1_dm/usb1_dp pins are left unconnected - The USB1 PHY is kept powered down	PWR	AA12
vdda33v_usb2	HS USB2 3.3V analog power supply. If USB2 is not used, this pin can alternatively be connected to VSS if the following requirements are met: - The usb2_dm/usb2_dp pins are left unconnected - The USB2 PHY is kept powered down	PWR	Y12
vdda_abe_per	DPLL_ABE, DPLL_PER, and PER HSDIVIDER analog power supply	PWR	M14
vdda_ddr	DPLL_DDR and DDR HSDIVIDER analog power supply	PWR	P16
vdda_debug	DPLL_DEBUG analog power supply	PWR	N11
vdda_dsp_eve	DPLL_DSP analog power supply	PWR	N12
vdda_gmac_core	DPLL_CORE and CORE HSDIVIDER analog power supply	PWR	P15
vdda_gpu	DPLL_GPU analog power supply	PWR	R14
vdda_hdmi	PLL_HDMI and HDMI analog power supply	PWR	Y17
vssa_hdmi	DPLL_HDMI and HDMI PHY analog ground	GND	AE19/ AD19
vdda_iva	DPLL_IVA analog power supply	PWR	R17
vdda_pcie	DPLL_PCIe_REF and PCIe analog power supply	PWR	W14
vssa_pcie	PCIe analog ground	GND	AE13/ AD13
vdda_pcie0	PCIe ch0 RX/TX analog power supply	PWR	AA17
vdda_pcie1	PCIe ch1 RX/TX analog power supply	PWR	AA16
vdda_sata	DPLL_SATA and SATA RX/TX analog power supply	PWR	V13

Copyright © 2015–2019, Texas Instruments Incorporated

表 4-34. Power Supply Signal Descriptions (continued)

SIGNAL NAME	DESCRIPTION	TYPE	BALL
vssa_sata	SATA analog ground	GND	AE10
vdda_usb3	DPLL_USB_OTG_SS and USB3.0 RX/TX analog power supply	PWR	W12
vssa_usb3	DPLL_USB and USB3.0 RX/TX analog ground	GND	AD10
vdda_video	DPLL_VIDEO1 and DPLL_VIDEO2 analog power supply	PWR	P14
vssa_video	DPLL_VIDEO1 and DPLL_VIDEO2 analog ground	GND	U14
vdds_mlbp	MLBP IO power supply	PWR	AA7/ Y7
vdda_mpu	DPLL_MPU analog power supply	PWR	N16
vdda_osc	HFOSC analog power supply	PWR	AE16/ AD16
vssa_osc0	OSC0 analog ground	GND	AF15
vssa_osc1	OSC1 analog ground	GND	AC14
vdda_rtc	RTC bias and RTC LFOSC analog power supply	PWR	AB13
vdds18v	1.8V power supply	PWR	W17/ W18/ V21/ V22/ T8/ R8/ P8/ N8/ M8/ M9/ H17/ G18
vdds18v_ddr1	DDR1 bias power supply	PWR	AA18/ AA19/ Y21/ W21
vdds18v_ddr2	DDR2 bias power supply	PWR	P20/ P21/ N21/ J21/ J22
vdds_ddr2	DDR2 power supply (1.8V for DDR2 mode/ 1.5V for DDR3 mode / 1.35V for DDR3L mode)	PWR	T24/ T25/ M20/ M21/ L20/ L21/ J27/ H20/ H21/ H22/ G22/ G23/ E24
vdds_ddr1	DDR1 power supply (1.8V for DDR2 mode/ 1.5V for DDR3 mode / 1.35V for DDR3L mode)	PWR	AH27/ AG20/ AG28/ AD26/ AC22/ AB21/ AB22/ AB24/ AB25/ AA21/ AA22/ W16/ W27
vddshv5	Dual Voltage (1.8V or 3.3V) power supply for the RTC Power Group pins	PWR	V12
vddshv1	Dual Voltage (1.8V or 3.3V) power supply for the VIN2 Power Group pins	PWR	H8/ H9/ G4/ G5/ E3/ E5
vddshv10	Dual Voltage (1.8V or 3.3V) power supply for the GPMC Power Group pins	PWR	T4/ T5/ R7/ R10/ P10/ N4/ N5
vddshv11	Dual Voltage (1.8V or 3.3V) power supply for the MMC2 Power Group pins	PWR	K8/ J8
vddshv2	Dual Voltage (1.8V or 3.3V) power supply for the VOUT Power Group pins	PWR	H10/ H11/ E10/ D10/ B6
vddshv3	Dual Voltage (1.8V or 3.3V) power supply for the GENERAL Power Group pins	PWR	H15/ H16/ H18/ H19/ G15/ E16/ E22/ D16/ D22/ B23
vddshv4	Dual Voltage (1.8V or 3.3V) power supply for the MMC4 Power Group pins	PWR	C24
vddshv6	Dual Voltage (1.8V or 3.3V) power supply for the VIN1 Power Group pins	PWR	AF5/ AE7/ AD5/ AD7
vddshv7	Dual Voltage (1.8V or 3.3V) power supply for the WIFI Power Group pins	PWR	AB6/ AB7
vddshv8	Dual Voltage (1.8V or 3.3V) power supply for the MMC1 Power Group pins	PWR	Y8/ W8
vddshv9	Dual Voltage (1.8V or 3.3V) power supply for the RGMII Power Group pins	PWR	W4/ W5/ U10
cap_vddram_dspeve2[(1)]	External capacitor connection for the DSP SRAM array ldo2 output	CAP	J9
cap_vddram_dspeve1[(1)]	External capacitor connection for the DSP SRAM array ldo1 output	CAP	J10
cap_vbbldo_mpu[(1)]	External capacitor connection for the MPU vbb ldo output	CAP	J16
cap_vddram_core2[(1)]	External capacitor connection for the Core SRAM array ldo2 output	CAP	J19
cap_vbbldo_dspeve[(1)]	External capacitor connection for the DSP vbb ldo output	CAP	K9

表 4-34. Power Supply Signal Descriptions (continued)

SIGNAL NAME	DESCRIPTION	TYPE	BALL
cap_vddram_mpu1[(1)]	External capacitor connection for the MPU SRAM array ldo1 output	CAP	K16
cap_vddram_mpu2[(1)]	External capacitor connection for the MPU SRAM array ldo2 output	CAP	K19
cap_vddram_core1[(1)]	External capacitor connection for the Core SRAM array ldo1 output	CAP	L9
cap_vddram_core4[(1)]	External capacitor connection for the Core SRAM array ldo4 output	CAP	P19
cap_vbbldo_iva[(1)]	External capacitor connection for the IVA vbb ldo output	CAP	R20
cap_vddram_iva[(1)]	External capacitor connection for the IVA SRAM array ldo output	CAP	T20
cap_vddram_gpu[(1)]	External capacitor connection for the GPU SRAM array ldo output	CAP	Y13
cap_vbbldo_gpu[(1)]	External capacitor connection for the GPU vbb ldo output	CAP	Y14
cap_vddram_core3[(1)]	External capacitor connection for the Core SRAM array ldo3 output	CAP	Y15
cap_vddram_core5[(1)]	External capacitor connection for the Core SRAM array ldo5 output	CAP	Y16

(1) This pin must always be connected via a 1-µF capacitor to vss.

Copyright © 2015–2019, Texas Instruments Incorporated

5 Specifications

注: For more information, see Power, Reset, and Clock Management / PRCM Subsystem Environment / External Voltage Inputs or Initialization / Preinitialization / Power Requirements section of the Device TRM.

注: The index numbers 1 and 2 which is part of the EMIF1 and EMIF2 signal prefixes (ddr1_* and ddr2_*) listed in 表 4-7, *EMIF Signal Descriptions*, column "SIGNAL NAME" not to be confused with DDR1 and DDR2 types of SDRAM memories.

注: Audio Back End (ABE) module is not supported for this family of devices, but “ABE” name is still present in some clock or DPLL names.

注意

All IO Cells are NOT Fail-safe compliant and should not be externally driven in absence of their IO supply.

5.1 Absolute Maximum Ratings

Stresses beyond those listed as absolute maximum ratings may cause permanent damage to the device. These are stress ratings only, and functional operation of the device at these or any other conditions beyond those listed under 5.4, *Recommended Operating Conditions*, is not implied. Exposure to absolute maximum rated conditions for extended periods may affect device reliability.

表 5-1. Absolute Maximum Rating Over Junction Temperature Range

PARAMETER[(1)]			MIN	MAX	UNIT
V_{SUPPLY} (Steady-State)	Supply Voltage Ranges (Steady-State)	Core (vdd, vdd_mpu, vdd_gpu, vdd_dspeve, vdd_iva, vdd_rtc)	–0.3	1.5	V
		Analog (vdda_usb1, vdda_usb2, vdda_abe_per, vdda_ddr, vdda_debug, vdda_dsp_eve, vdda_gmac_core, vdda_gpu, vdda_hdmi, vdda_iva, vdda_pcie, vdda_pcie0, vdda_pcie1, vdda_sata, vdda_usb3, vdda_video, vdda_mpu, vdda_osc, vdda_rtc)	–0.3	2.0	
		Analog 3.3V (vdda33v_usb1, vdda33v_usb2)	-0.3	3.8	
		vdds18v, vdds18v_ddr1, vdds18v_ddr2, vdds_mlbp, vdds_ddr1, vdds_ddr2	–0.3	2.1	
		vddshv1-11 (1.8V mode)	–0.3	2.1	
		vddshv1-7 (3.3V mode), vddshv9-11 (3.3V mode)	–0.3	3.8	
		vddshv8 (3.3V mode)	–0.3	3.6	

表 5-1. Absolute Maximum Rating Over Junction Temperature Range (continued)

PARAMETER[1]			MIN	MAX	UNIT
V_{IO} (Steady-State)	Input and Output Voltage Ranges (Steady-State)	Core I/Os	–0.3	1.5	V
		Analog I/Os (except HDMI)	–0.3	2.0	
		HDMI I/Os	–0.3	3.5	
		I/O 1.35 V	–0.3	1.65	
		I/O 1.5 V	–0.3	1.8	
		1.8 V I/Os	–0.3	2.1	
		3.3 V I/Os (except those powered by vddshv8)	–0.3	3.8	
		3.3 V I/Os (powered by vddshv8)	–0.3	3.6	
SR	Maximum slew rate, all supplies			10^5	V/s
V_{IO} (Transient Overshoot / Undershoot)	Input and Output Voltage Ranges (Transient Overshoot/Undershoot) Note: valid for up to 20% of the signal period. See 図 5-1, *IO transient voltage ranges*			0.2*VDD [2]	V
T_{STG}	Storage temperature range after soldered onto PC Board		–55	+150	°C
Latch-up I-Test	I-test[3], All I/Os (if different levels then one line per level)		–100	100	mA
Latch-up OV-Test	Over-voltage Test[4], All supplies (if different levels then one line per level)		N/A	$1.5*V_{SUPPLY\ MAX}$	V

(1) See I/Os supplied by this power pin in 表 4-2 *Ball Characteristics*

(2) VDD is the voltage on the corresponding power-supply pin(s) for the I/O.

(3) Per JEDEC JESD78 at 125°C with specified I/O pin injection current and clamp voltage of 1.5 times maximum recommended I/O voltage and negative 0.5 times maximum recommended I/O voltage.

(4) Per JEDEC JESD78 at 125°C.

(5) The maximum valid input voltage on an IO pin cannot exceed 0.3 volts when the supply powering the IO is turned off. This requirement applies to all the IO pins which are not fail-safe and for all values of IO supply voltage. Special attention should be applied anytime peripheral devices are not powered from the same power sources used to power the respective IO supply. It is important the attached peripheral never sources a voltage outside the valid input voltage range, including power supply ramp-up and ramp-down sequences.

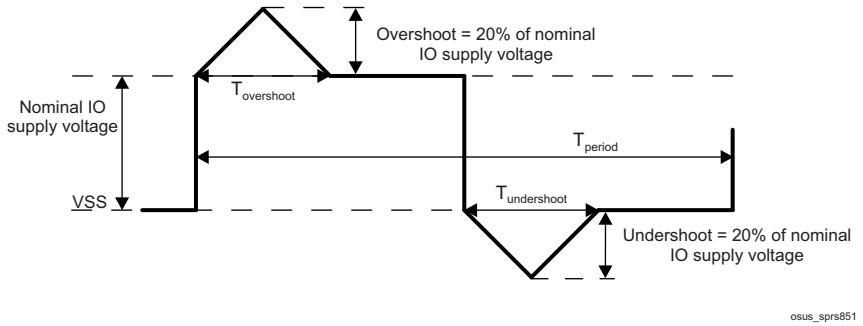

(1) $T_{overshoot} + T_{undershoot} < 20\%$ of T_{period}

図 5-1. IO transient voltage ranges

5.2 ESD Ratings

表 5-2. ESD Ratings

			VALUE	UNIT
$V_{(ESD)}$	Electrostatic discharge	Human-body model (HBM), per ANSI/ESDA/JEDEC JS-001[1]	±1000	V
		Charged-device model (CDM), per JEDEC specification JESD22-C101[2]	±250	

Copyright © 2015–2019, Texas Instruments Incorporated

(1) JEDEC document JEP155 states that 500-V HBM allows safe manufacturing with a standard ESD control process.
(2) JEDEC document JEP157 states that 250-V CDM allows safe manufacturing with a standard ESD control process.

5.3 Power on Hours (POH) Limits

The information in the section below is provided solely for your convenience and does not extend or modify the warranty provided under TI's standard terms and conditions for TI semiconductor products.

注: POH is a function of voltage, temperature and time. Usage at higher voltages and temperatures will result in a reduction in POH.

表 5-3. Power on Hour (POH) Limits(1)

OPERATING CONDITION		COMMERCIAL JUNCTION TEMP RANGE 0°C ~ 90°C		EXTENDED JUNCTION TEMP RANGE -40°C ~ 105°C			
OPP	HDMI	JUNCTION TEMP (Tj)	LIFETIME (POH)	JUNCTION TEMP (Tj)	LIFETIME (POH)	JUNCTION TEMP (Tj)	LIFETIME (POH)
OPP_NOM or OPP_OD	Not Used	90°C	100k	100°C	100k	105°C	100k(3)
	Used	90°C	100k	100°C	63k	105°C	45k
OPP_HIGH	Not Used	90°C	65k	100°C	55k	105°C	50k
	Used	90°C	65k	100°C	55k	105°C	45k

(1) Unless specified in 表 5-3, all voltage domains and operating conditions are supported in the device at the noted temperatures.
(2) Power on hours (POH) assume HDMI is used at the maximum supported bit rate continuously and/or operating the device continuously at the VD_MPU operating point (OPP) noted.
(3) 90k POH only if SuperSpeed USB 3.0 Dual-Role-Device (at 5 Gbps) or PCIe in Gen-II mode (at 5 Gbps) are used.

5.4 Recommended Operating Conditions

The device is used under the recommended operating conditions described in 表 5-4.

注: Logic functions and parameter values are not assured out of the range specified in the recommended operating conditions.

表 5-4. Recommended Operating Conditions

PARAMETER	DESCRIPTION	MIN (2)	NOM	MAX DC (3)	MAX (2)	UNIT
Input Power Supply Voltage Range						
vdd	Core voltage domain supply	See 5.5				V
vdd_mpu	Supply voltage range for MPU domain	See 5.5				V
vdd_gpu	GPU voltage domain supply	See 5.5				V
vdd_dspeve	DSP voltage domain supply	See 5.5				V
vdd_iva	IVA voltage domain supply	See 5.5				V
vdd_rtc	RTC voltage domain supply	See 5.5				V
vdda_usb1	DPLL_USB and HS USB1 1.8V analog power supply	1.71	1.80	1.836	1.89	V
	Maximum noise (peak-peak)		50			mV_{PPmax}
vdda_usb2	HS USB2 1.8V analog power supply	1.71	1.80	1.836	1.89	V
	Maximum noise (peak-peak)		50			mV_{PPmax}
vdda33v_usb1	HS USB1 3.3V analog power supply.If USB1 is not used, this pin can alternatively be connected to VSS if the following requirements are met: - The usb1_dm/usb1_dp pins are left unconnected - The USB1 PHY is kept powered down	3.135	3.3	3.366	3.465	V
	Maximum noise (peak-peak)		50			mV_{PPmax}
vdda33v_usb2	HS USB2 3.3V analog power supply. If USB2 is not used, this pin can alternatively be connected to VSS if the following requirements are met: - The usb2_dm/usb2_dp pins are left unconnected - The USB2 PHY is kept powered down	3.135	3.3	3.366	3.465	V
	Maximum noise (peak-peak)		50			mV_{PPmax}
vdda_abe_per	DPLL_ABE, DPLL_PER, and PER HSDIVIDER analog power supply	1.71	1.80	1.836	1.89	V
	Maximum noise (peak-peak)		50			mV_{PPmax}
vdda_ddr	DPLL_DDR and DDR HSDIVIDER analog power supply	1.71	1.80	1.836	1.89	V
	Maximum noise (peak-peak)		50			mV_{PPmax}
vdda_debug	DPLL_DEBUG analog power supply	1.71	1.80	1.836	1.89	V
	Maximum noise (peak-peak)		50			mV_{PPmax}
vdda_dsp_eve	DPLL_DSP analog power supply	1.71	1.80	1.836	1.89	V
	Maximum noise (peak-peak)		50			mV_{PPmax}
vdda_gmac_core	DPLL_CORE and CORE HSDIVIDER analog power supply	1.71	1.80	1.836	1.89	V
	Maximum noise (peak-peak)		50			mV_{PPmax}
vdda_gpu	DPLL_GPU analog power supply	1.71	1.80	1.836	1.89	V
	Maximum noise (peak-peak)		50			mV_{PPmax}

Copyright © 2015–2019, Texas Instruments Incorporated

表 5-4. Recommended Operating Conditions (continued)

PARAMETER	DESCRIPTION		MIN (2)	NOM	MAX DC (3)	MAX (2)	UNIT
vdda_hdmi	PLL_HDMI and HDMI analog power supply		1.71	1.80	1.836	1.89	V
	Maximum noise (peak-peak)			50			mV_{PPmax}
vdda_iva	DPLL_IVA analog power supply		1.71	1.80	1.836	1.89	V
	Maximum noise (peak-peak)			50			mV_{PPmax}
vdda_pcie	DPLL_PCIe_REF and PCIe analog power supply		1.71	1.80	1.836	1.89	V
	Maximum noise (peak-peak)			50			mV_{PPmax}
vdda_pcie0	PCIe ch0 RX/TX analog power supply		1.71	1.80		1.89	V
	Maximum noise (peak-peak)			50			mV_{PPmax}
vdda_pcie1	PCIe ch1 RX/TX analog power supply		1.71	1.80		1.89	V
	Maximum noise (peak-peak)			50			mV_{PPmax}
vdda_sata	DPLL_SATA and SATA RX/TX analog power supply		1.71	1.80	1.836	1.89	V
	Maximum noise (peak-peak)			50			mV_{PPmax}
vdda_usb3	DPLL_USB_OTG_SS and USB3.0 RX/TX analog power supply		1.71	1.80	1.836	1.89	V
	Maximum noise (peak-peak)			50			mV_{PPmax}
vdda_video	DPLL_VIDEO1 and DPLL_VIDEO2 analog power supply		1.71	1.80	1.836	1.89	V
	Maximum noise (peak-peak)			50			mV_{PPmax}
vdda_mpu	DPLL_MPU analog power supply		1.71	1.80	1.836	1.89	V
	Maximum noise (peak-peak)			50			mV_{PPmax}
vdda_osc	HFOSC analog power supply		1.71	1.80		1.89	V
	Maximum noise (peak-peak)			50			mV_{PPmax}
vdda_rtc	RTC bias and RTC LFOSC analog power supply		1.71	1.80		1.89	V
	Maximum noise (peak-peak)			50			mV_{PPmax}
vdds18v	1.8V power supply		1.71	1.80	1.836	1.89	V
	Maximum noise (peak-peak)			50			mV_{PPmax}
vdds18v_ddr1	EMIF1 bias power supply		1.71	1.80	1.836	1.89	V
	Maximum noise (peak-peak)			50			mV_{PPmax}
vdds18v_ddr2	EMIF2 bias power supply		1.71	1.80	1.836	1.89	V
	Maximum noise (peak-peak)			50			mV_{PPmax}
vdds_ddr1	EMIF1 power supply (1.5V for DDR3 mode / 1.35V for DDR3L mode)	1.35-V Mode	1.28	1.35	1.377	1.42	V
		1.5-V Mode	1.43	1.50	1.53	1.57	
	Maximum noise (peak-peak)	1.35-V Mode		50			mV_{PPmax}
		1.5-V Mode					
vdds_ddr2	EMIF2 power supply (1.5V for DDR3 mode / 1.35V for DDR3L mode)	1.35-V Mode	1.28	1.35	1.377	1.42	V
		1.5-V Mode	1.43	1.50	1.53	1.57	
	Maximum noise (peak-peak)	1.35-V Mode		50			mV_{PPmax}
		1.5-V Mode					

表 5-4. Recommended Operating Conditions (continued)

PARAMETER	DESCRIPTION		MIN (2)	NOM	MAX DC (3)	MAX (2)	UNIT
vddshv5	Dual Voltage (1.8V or 3.3V) power supply for the RTC Power Group pins	1.8-V Mode	1.71	1.80	1.836	1.89	V
		3.3-V Mode	3.135	3.30	3.366	3.465	
	Maximum noise (peak-peak)	1.8-V Mode		50			mV_{PPmax}
		3.3-V Mode					
vddshv1	Dual Voltage (1.8V or 3.3V) power supply for the VIN2 Power Group pins	1.8-V Mode	1.71	1.80	1.836	1.89	V
		3.3-V Mode	3.135	3.30	3.366	3.465	
	Maximum noise (peak-peak)	1.8-V Mode		50			mV_{PPmax}
		3.3-V Mode					
vddshv10	Dual Voltage (1.8V or 3.3V) power supply for the GPMC Power Group pins	1.8-V Mode	1.71	1.80	1.836	1.89	V
		3.3-V Mode	3.135	3.30	3.366	3.465	
	Maximum noise (peak-peak)	1.8-V Mode		50			mV_{PPmax}
		3.3-V Mode					
vddshv11	Dual Voltage (1.8V or 3.3V) power supply for the MMC2 Power Group pins	1.8-V Mode	1.71	1.80	1.836	1.89	V
		3.3-V Mode	3.135	3.30	3.366	3.465	
	Maximum noise (peak-peak)	1.8-V Mode		50			mV_{PPmax}
		3.3-V Mode					
vddshv2	Dual Voltage (1.8V or 3.3V) power supply for the VOUT Power Group pins	1.8-V Mode	1.71	1.80	1.836	1.89	V
		3.3-V Mode	3.135	3.30	3.366	3.465	
	Maximum noise (peak-peak)	1.8-V Mode		50			mV_{PPmax}
		3.3-V Mode					
vddshv3	Dual Voltage (1.8V or 3.3V) power supply for the GENERAL Power Group pins	1.8-V Mode	1.71	1.80	1.836	1.89	V
		3.3-V Mode	3.135	3.30	3.366	3.465	
	Maximum noise (peak-peak)	1.8-V Mode		50			mV_{PPmax}
		3.3-V Mode					
vddshv4	Dual Voltage (1.8V or 3.3V) power supply for the MMC4 Power Group pins	1.8-V Mode	1.71	1.80	1.836	1.89	V
		3.3-V Mode	3.135	3.30	3.366	3.465	
	Maximum noise (peak-peak)	1.8-V Mode		50			mV_{PPmax}
		3.3-V Mode					
vddshv6	Dual Voltage (1.8V or 3.3V) power supply for the VIN1 Power Group pins	1.8-V Mode	1.71	1.80	1.836	1.89	V
		3.3-V Mode	3.135	3.30	3.366	3.465	
	Maximum noise (peak-peak)	1.8-V Mode		50			mV_{PPmax}
		3.3-V Mode					
vddshv7	Dual Voltage (1.8V or 3.3V) power supply for the WIFI Power Group pins	1.8-V Mode	1.71	1.80	1.836	1.89	V
		3.3-V Mode	3.135	3.30	3.366	3.465	
	Maximum noise (peak-peak)	1.8-V Mode		50			mV_{PPmax}
		3.3-V Mode					

Copyright © 2015–2019, Texas Instruments Incorporated

表 5-4. Recommended Operating Conditions (continued)

PARAMETER	DESCRIPTION		MIN (2)	NOM	MAX DC (3)	MAX (2)	UNIT
vddshv8	Dual Voltage (1.8V or 3.3V) power supply for the MMC1 Power Group pins	1.8-V Mode	1.71	1.80	1.836	1.89	V
		3.3-V Mode	3.135	3.30	3.366	3.465	
	Maximum noise (peak-peak)	1.8-V Mode		50			mV_{PPmax}
		3.3-V Mode					
vddshv9	Dual Voltage (1.8V or 3.3V) power supply for the RGMII Power Group pins	1.8-V Mode	1.71	1.80	1.836	1.89	V
		3.3-V Mode	3.135	3.30	3.366	3.465	
	Maximum noise (peak-peak)	1.8-V Mode		50			mV_{PPmax}
		3.3-V Mode					
vss	Ground supply					0	V
vssa_hdmi	DPLL_HDMI and HDMI PHY analog ground					0	V
vssa_pcie	PCIe analog ground					0	V
vssa_usb	HS USB1 and HS USB2 analog ground					0	V
vssa_usb3	DPLL_USB and USB3.0 RX/TX analog ground					0	V
vssa_video	DPLL_VIDEO1 and DPLL_VIDEO2 analog ground					0	V
vssa_osc0	OSC0 analog ground					0	V
vssa_osc1	OSC1 analog ground					0	V
T_J	Operating junction temperature range	Commercial	0			90	°C
		Extended	-40			105	
ddr1_vref0	Reference Power Supply EMIF1		0.5*vdds_ddr1				V
ddr2_vref0	Reference Power Supply EMIF2		0.5*vdds_ddr2				V

(1) Refer to 5.3, Power on Hour (POH) Limits for limitations.

(2) The voltage at the device ball should never be below the MIN voltage or above the MAX voltage for any amount of time. This requirement includes dynamic voltage events such as AC ripple, voltage transients, voltage dips, etc.

(3) The DC voltage at the device ball should never be above the MAX DC voltage to avoid impact on device reliability and lifetime POH (Power on Hour). The MAX DC voltage is defined as the highest allowed DC regulated voltage, without transients, seen at the ball.

5.5 Operating Performance Points

This section describes the operating conditions of the AM572x device. This section also contains the description of each OPP (operating performance point) for processor clocks and device core clocks.

表 5-5 describes the maximum supported frequency per speed grade for AM572x devices.

表 5-5. Speed Grade Maximum Frequency

DEVICE SPEED	MAXIMUM FREQUENCY (MHz)							
	MPU	DSP	EVE	IVA	GPU	IPU	L3	DDR3/DDR3L
AM5729	1500	750	650	532	532	212.8	266	533 (DDR3-1066)
AM5728	1500	750	N/A	532	532	212.8	266	533 (DDR3-1066)
AM5726	1500	750	N/A	N/A	N/A	212.8	266	533 (DDR3-1066)

(1) N/A in this table stands for Not Applicable

5.5.1 AVS and ABB Requirements

Adaptive Voltage Scaling (AVS) and Adaptive Body Biasing (ABB) are required on most of the vdd_* supplies as defined in 表 5-6.

表 5-6. AVS and ABB Requirements per vdd_* Supply

SUPPLY	AVS REQUIRED?	ABB REQUIRED?
vdd_core	Yes, for all OPPs	No
vdd_mpu	Yes, for all OPPs	Yes, for all OPPs
vdd_ivahd	Yes, for all OPPs	Yes, for all OPPs
vdd_dspeve	Yes, for all OPPs	Yes, for all OPPs
vdd_gpu	Yes, for all OPPs	Yes, for all OPPs
vdd_rtc	No	No

5.5.2 Voltage And Core Clock Specifications

表 5-7 shows the recommended OPP per voltage domain.

表 5-7. Voltage Domains Operating Performance Points

DOMAIN	CONDITION	OPP_NOM			OPP_OD			OPP_HIGH			
		MIN (2)	NOM (1)	MAX (2)	MIN (2)	NOM (1)	MAX (2)	MIN (2)	NOM (1)	MAX DC (3)	MAX (2)
VD_CORE (V)	BOOT (Before AVS is enabled) (4)	1.11	1.15	1.2	Not Applicable			Not Applicable			
	After AVS is enabled (4)	AVS Voltage (5) – 3.5%	AVS Voltage (5)	1.2	Not Applicable			Not Applicable			
VD_MPU (V)	BOOT (Before AVS is enabled)(4)	1.06	1.15	1.2	Not Applicable			Not Applicable			
	After AVS is enabled(4)	AVS Voltage (5) – 3.5%	AVS Voltage (5)	1.2	AVS Voltage (5) – 3.5%	AVS Voltage (5)	AVS Voltage (5) + 5%	AVS Voltage (5) – 3.5%	AVS Voltage (5)	AVS Voltage (5) +2%	AVS Voltage (5) + 5%
VD_RTC (V) (6)	-	0.84	0.88 to 1.06	1.16	Not Applicable			Not Applicable			
Others (V)	BOOT (Before AVS is enabled) (4)	1.02	1.06	1.16	Not Applicable			Not Applicable			
	After AVS is enabled(4)	AVS Voltage (5) – 3.5%	AVS Voltage (5)	1.16	AVS Voltage (5) – 3.5%	AVS Voltage (5)	AVS Voltage (5) + 5%	AVS Voltage (5) – 3.5%	AVS Voltage (5)	AVS Voltage (5) +2%	AVS Voltage (5) + 5%

(1) In a typical implementation, the power supply should target the NOM voltage.

(2) The voltage at the device ball should never be below the MIN voltage or above the MAX voltage for any amount of time. This requirement includes dynamic voltage events such as AC ripple, voltage transients, voltage dips, etc.

(3) The DC voltage at the device ball should never be above the MAX DC voltage to avoid impact on device reliability and lifetime POH (Power on Hour). The MAX DC voltage is defined as the highest allowed DC regulated voltage, without transients, seen at the ball.

(4) For all OPPs, AVS must be enabled to avoid impact on device reliability, lifetime POH (Power on Hour), and device power.

(5) The AVS voltages are device-dependent, voltage domain-dependent, and OPP-dependent. They must be read from the STD_FUSE_OPP. For information about STD_FUSE_OPP Registers address, please refer to Control Module Section of the TRM. The power supply should be adjustable over the following ranges for each required OPP:

- OPP_NOM for MPU: 0.85 V – 1.15 V
- OPP_NOM for CORE and Others: 0.85 V - 1.15 V
- OPP_OD: 0.885 V - 1.15 V
- OPP_HIGH: 0.95 V - 1.25 V

The AVS voltages will be within the above specified ranges.

(6) VD_RTC can optionally be tied to VD_CORE and operate at the VD_CORE AVS voltages.

(7) The power supply must be programmed with the AVS voltages for the MPU and the CORE voltage domain, either just after the ROM boot or at the earliest possible time in the secondary boot loader before there is significant activity seen on these domains.

表 5-8 describes the standard processor clocks speed characteristics vs OPP of the device.

Copyright © 2015–2019, Texas Instruments Incorporated

表 5-8. Supported OPP vs Max Frequency (2)

DESCRIPTION	OPP_NOM	OPP_OD	OPP_HIGH
	MAX FREQ. (MHz)	MAX FREQ. (MHz)	MAX FREQ. (MHz)
VD_MPU			
MPU_CLK	1000	1176	1500
VD_DSPEVE			
DSP_CLK	600	700	750
EVE_FCLK	535	650	650
VD_IVA			
IVA_GCLK	388.3	430	532
VD_GPU			
GPU_CLK	425.6	500	532
VD_CORE			
CORE_IPUx_CLK	212.8	N/A	N/A
L3_CLK	266	N/A	N/A
DDR3 / DDR3L	532 (DDR3-1066)	N/A	N/A
VD_RTC			
RTC_FCLK	0.034	N/A	N/A

(1) N/A in this table stands for Not Applicable.

(2) Maximum supported frequency is limited according to 表 5-5, *Speed Grade Maximum Frequency*).

5.5.3 Maximum Supported Frequency

Device modules either receive their clock directly from an external clock input, directly from a PLL, or from a PRCM. 表 5-9 lists the clock source options for each module on this device, along with the maximum frequency that module can accept. To ensure proper module functionality, the device PLLs and dividers must be programmed not to exceed the maximum frequencies listed in this table.

表 5-9. Maximum Supported Frequency

Module				Clock Sources		
Instance Name	Input Clock Name	Clock Type	Max. Clock Allowed (MHz)	PRCM Clock Name	PLL / OSC / Source Clock Name	PLL / OSC / Source Name
AES1	AES1_L3_CLK	Int	266	L4SEC_L3_GICLK	CORE_X2_CLK	DPLL_CORE
AES2	AES2_L3_CLK	Int	266	L4SEC_L3_GICLK	CORE_X2_CLK	DPLL_CORE
BB2D	BB2D_FCLK	Func	354.6	BB2D_GFCLK	BB2D_GFCLK	DPLL_CORE
	BB2D_ICLK	Int	266	DSS_L3_GICLK	CORE_X2_CLK	DPLL_CORE
COUNTER_32K	COUNTER_32K_FCLK	Func	0.032	FUNC_32K_CLK	SYS_CLK1/610	OSC1
	COUNTER_32K_ICLK	Int	38.4	WKUPAON_GICLK	SYS_CLK1	OSC1
					DPLL_ABE_X2_CLK	DPLL_ABE
CTRL_MODULE_BANDGAP	L3INSTR_TS_GCLK	Int	4.8	L3INSTR_TS_GCLK	SYS_CLK1	OSC1
					DPLL_ABE_X2_CLK	DPLL_ABE
CTRL_MODULE_CORE	L4CFG_L4_GICLK	Int	133	L4CFG_L4_GICLK	CORE_X2_CLK	DPLL_CORE
CTRL_MODULE_WKUP	WKUPAON_GICLK	Int	38.4	WKUPAON_GICLK	SYS_CLK1	OSC1
					DPLL_ABE_X2_CLK	DPLL_ABE
DCAN1	DCAN1_FCLK	Func	38.4	DCAN1_SYS_CLK	SYS_CLK1	OSC1
					SYS_CLK2	OSC2
	DCAN1_ICLK	Int	266	WKUPAON_GICLK	SYS_CLK1	OSC1
					DPLL_ABE_X2_CLK	DPLL_ABE

表 5-9. Maximum Supported Frequency (continued)

Module				Clock Sources		
Instance Name	Input Clock Name	Clock Type	Max. Clock Allowed (MHz)	PRCM Clock Name	PLL / OSC / Source Clock Name	PLL / OSC / Source Name
DCAN2	DCAN2_FCLK	Func	38.4	DCAN2_SYS_CLK	SYS_CLK1	OSC1
	DCAN2_ICLK	Int	266	L4PER2_L3_GICLK	CORE_X2_CLK	DPLL_CORE
DES3DES	DES_CLK_L3	Int	266	L4SEC_L3_GICLK	CORE_X2_CLK	DPLL_CORE
DLL	EMIF_DLL_FCLK	Func	EMIF_DLL_FCLK	EMIF_DLL_GCLK	EMIF_DLL_GCLK	DPLL_DDR
DLL_AGING	FCLK	Int	38.4	L3INSTR_DLL_AGING_GCLK	SYS_CLK1	OSC1
					DPLL_ABE_X2_CLK	DPLL_ABE
DMM	DMM_CLK	Int	266	EMIF_L3_GICLK	CORE_X2_CLK	DPLL_CORE
DPLL_DEBUG	SYSCLK	Int	38.4	EMU_SYS_CLK	SYS_CLK1	OSC1
DSP1	DSP1_FICLK	Int & Func	DSP_CLK	DSP1_GFCLK	DSP_GFCLK	DPLL_DSP
DSP2	DSP2_FICLK	Int & Func	DSP_CLK	DSP2_GFCLK	DSP_GFCLK	DPLL_DSP
DSS	DSS_HDMI_CEC_CLK	Func	0.032	HDMI_CEC_GFCLK	SYS_CLK1/610	OSC1
	DSS_HDMI_PHY_CLK	Func	48	HDMI_PHY_GFCLK	FUNC_192M_CLK	DPLL_PER
	DSS_CLK	Func	192	DSS_GFCLK	DSS_CLK	DPLL_PER
	HDMI_CLKINP	Func	38.4	HDMI_DPLL_CLK	SYS_CLK1	OSC1
					SYS_CLK2	OSC2
	DSS_L3_ICLK	Int	266	DSS_L3_GICLK	CORE_X2_CLK	DPLL_CORE
	VIDEO1_CLKINP	Func	38.4	VIDEO1_DPLL_CLK	SYS_CLK1	OSC1
					SYS_CLK2	OSC2
	VIDEO2_CLKINP	Func	38.4	VIDEO2_DPLL_CLK	SYS_CLK1	OSC1
					SYS_CLK2	OSC2
	DPLL_DSI1_A_CLK1	Func	209.3	N/A	HDMI_CLK	DPLL_HDMI
					VIDEO1_CLKOUT1	DPLL_VIDEO1
	DPLL_DSI1_B_CLK1	Func	209.3	N/A	VIDEO1_CLKOUT3	DPLL_VIDEO1
					VIDEO2_CLKOUT3	DPLL_VIDEO2
					HDMI_CLK	DPLL_HDMI
					DPLL_ABE_X2_CLK	DPLL_ABE
	DPLL_DSI1_C_CLK1	Func	209.3	N/A	HDMI_CLK	DPLL_HDMI
					VIDEO1_CLKOUT3	DPLL_VIDEO1
					VIDEO2_CLKOUT1	DPLL_VIDEO2
	DPLL_HDMI_CLK1	Func	185.6	N/A	HDMI_CLK	DPLL_HDMI
DSS DISPC	LCD1_CLK	Func	209.3	N/A	DPLL_DSI1_A_CLK1	See DSS data in the rows above
					DSS_CLK	
	LCD2_CLK	Func	209.3	N/A	DPLL_DSI1_B_CLK1	
					DSS_CLK	
	LCD3_CLK	Func	209.3	N/A	DPLL_DSI1_C_CLK1	
					DSS_CLK	
	F_CLK	Func	209.3	N/A	DPLL_DSI1_A_CLK1	
					DPLL_DSI1_B_CLK1	
					DPLL_DSI1_C_CLK1	
					DSS_CLK	
					DPLL_HDMI_CLK1	

Copyright © 2015–2019, Texas Instruments Incorporated

表 5-9. Maximum Supported Frequency (continued)

Module				Clock Sources		
Instance Name	Input Clock Name	Clock Type	Max. Clock Allowed (MHz)	PRCM Clock Name	PLL / OSC / Source Clock Name	PLL / OSC / Source Name
EFUSE_CTRL_CUST	ocp_clk	Int	133	CUSTEFUSE_L4_GICLK	CORE_X2_CLK	DPLL_CORE
	sys_clk	Func	38.4	CUSTEFUSE_SYS_GFCLK	SYS_CLK1	OSC1
ELM	ELM_ICLK	Int	266	L4PER_L3_GICLK	CORE_X2_CLK	DPLL_CORE
EMIF_OCP_FW	L3_CLK	Int	266	EMIF_L3_GICLK	CORE_X2_CLK	DPLL_CORE
EMIF_PHY1	EMIF_PHY1_FCLK	Func	DDR	EMIF_PHY_GCLK	EMIF_PHY_GCLK	DPLL_DDR
EMIF_PHY2	EMIF_PHY2_FCLK	Func	DDR	EMIF_PHY_GCLK	EMIF_PHY_GCLK	DPLL_DDR
EMIF1	EMIF1_ICLK	Int	266	EMIF_L3_GICLK	CORE_X2_CLK	DPLL_CORE
EMIF2	EMIF2_ICLK	Int	266	EMIF_L3_GICLK	CORE_X2_CLK	DPLL_CORE
EVE1	EVE1_FCLK	Func	EVE_FCLK	EVE1_GFCLK	-	DPLL_DSP
					EVE_GFCLK	DPLL_EVE
EVE2	EVE2_FCLK	Func	EVE_FCLK	EVE2_GFCLK	-	DPLL_DSP
					EVE_GFCLK	DPLL_EVE
EVE3	EVE3_FCLK	Func	EVE_FCLK	EVE3_GFCLK	-	DPLL_DSP
					EVE_GFCLK	DPLL_EVE
EVE4	EVE4_FCLK	Func	EVE_FCLK	EVE4_GFCLK	-	DPLL_DSP
					EVE_GFCLK	DPLL_EVE
FPKA	PKA_CLK	Int & Func	266	L4SEC_L3_GICLK	CORE_X2_CLK	DPLL_CORE
GMAC_SW	CPTS_RFT_CLK	Func	266	GMAC_RFT_CLK	PER_ABE_X1_GFCLK	DPLL_ABE
					VIDEO1_CLK	DPLL_VIDEO1
					VIDEO2_CLK	DPLL_VIDEO2
					HDMI_CLK	DPLL_HDMI
					CORE_X2_CLK	DPLL_CORE
	MAIN_CLK	Int	125	GMAC_MAIN_CLK	GMAC_250M_CLK	DPLL_GMAC
	MHZ_250_CLK	Func	250	GMII_250MHZ_CLK	GMII_250MHZ_CLK	DPLL_GMAC
	MHZ_5_CLK	Func	5	RGMII_5MHZ_CLK	GMAC_RMII_HS_CLK	DPLL_GMAC
	MHZ_50_CLK	Func	50	RMII_50MHZ_CLK	GMAC_RMII_HS_CLK	DPLL_GMAC
	RMII1_MHZ_50_CLK	Func	50	RMII_50MHZ_CLK	GMAC_RMII_HS_CLK	DPLL_GMAC
	RMII2_MHZ_50_CLK	Func	50	RMII_50MHZ_CLK	GMAC_RMII_HS_CLK	DPLL_GMAC
GPIO1	GPIO1_ICLK	Int	38.4	WKUPAON_GICLK	SYS_CLK1	OSC1
					DPLL_ABE_X2_CLK	DPLL_ABE
	GPIO1_DBCLK	Func	0.032	WKUPAON_SYS_GFCLK	WKUPAON_32K_GFCLK	OSC1
						RTC Oscillator
GPIO2	GPIO2_ICLK	Int	266	L4PER_L3_GICLK	CORE_X2_CLK	DPLL_CORE
	GPIO2_DBCLK	Func	0.032	GPIO_GFCLK	FUNC_32K_CLK	OSC1
						RTC Oscillator
GPIO3	GPIO3_ICLK	Int	266	L4PER_L3_GICLK	CORE_X2_CLK	DPLL_CORE
	GPIO3_DBCLK	Func	0.032	GPIO_GFCLK	FUNC_32K_CLK	OSC1
						RTC Oscillator
GPIO4	GPIO4_ICLK	Int	266	L4PER_L3_GICLK	CORE_X2_CLK	DPLL_CORE
	GPIO4_DBCLK	Func	0.032	GPIO_GFCLK	FUNC_32K_CLK	OSC1
	PIDBCLK	Func	0.032	GPIO_GFCLK		RTC Oscillator

Copyright © 2015–2019, Texas Instruments Incorporated

表 5-9. Maximum Supported Frequency (continued)

Module				Clock Sources		
Instance Name	Input Clock Name	Clock Type	Max. Clock Allowed (MHz)	PRCM Clock Name	PLL / OSC / Source Clock Name	PLL / OSC / Source Name
GPIO5	GPIO5_ICLK	Int	266	L4PER_L3_GICLK	CORE_X2_CLK	DPLL_CORE
	GPIO5_DBCLK	Func	0.032	GPIO_GFCLK	FUNC_32K_CLK	OSC1
	PIDBCLK	Func	0.032	GPIO_GFCLK		RTC Oscillator
GPIO6	GPIO6_ICLK	Int	266	L4PER_L3_GICLK	CORE_X2_CLK	DPLL_CORE
	GPIO6_DBCLK	Func	0.032	GPIO_GFCLK	FUNC_32K_CLK	OSC1
	PIDBCLK	Func	0.032	GPIO_GFCLK		RTC Oscillator
GPIO7	GPIO7_ICLK	Int	266	L4PER_L3_GICLK	CORE_X2_CLK	DPLL_CORE
	GPIO7_DBCLK	Func	0.032	GPIO_GFCLK	FUNC_32K_CLK	OSC1
	PIDBCLK	Func	0.032	GPIO_GFCLK		RTC Oscillator
GPIO8	GPIO8_ICLK	Int	266	L4PER_L3_GICLK	CORE_X2_CLK	DPLL_CORE
	GPIO8_DBCLK	Func	0.032	GPIO_GFCLK	FUNC_32K_CLK	OSC1
	PIDBCLK	Func	0.032	GPIO_GFCLK		RTC Oscillator
GPMC	GPMC_FCLK	Int	266	L3MAIN1_L3_GICLK	CORE_X2_CLK	DPLL_CORE
GPU	GPU_FCLK1	Func	GPU_CLK	GPU_CORE_GCLK	CORE_GPU_CLK	DPLL_CORE
					PER_GPU_CLK	DPLL_PER
					GPU_GCLK	DPLL_GPU
	GPU_FCLK2	Func	GPU_CLK	GPU_HYD_GCLK	CORE_GPU_CLK	DPLL_CORE
					PER_GPU_CLK	DPLL_PER
					GPU_GCLK	DPLL_GPU
	GPU_ICLK	Int	266	GPU_L3_GICLK	CORE_X2_CLK	DPLL_CORE
HDMI PHY	DSS_HDMI_PHY_CLK	Func	38.4	HDMI_PHY_GFCLK	FUNC_192M_CLK	DPLL_PER
HDQ1W	HDQ1W_ICLK	Int & Func	266	L4PER_L3_GICLK	CORE_X2_CLK	DPLL_CORE
	HDQ1W_FCLK	Func	12	PER_12M_GFCLK	FUNC_192M_CLK	DPLL_PER
I2C1	I2C1_ICLK	Int	266	L4PER_L3_GICLK	CORE_X2_CLK	DPLL_CORE
	I2C1_FCLK	Func	96	PER_96M_GFCLK	FUNC_192M_CLK	DPLL_PER
I2C2	I2C2_ICLK	Int	266	L4PER_L3_GICLK	CORE_X2_CLK	DPLL_CORE
	I2C2_FCLK	Func	96	PER_96M_GFCLK	FUNC_192M_CLK	DPLL_PER
I2C3	I2C3_ICLK	Int	266	L4PER_L3_GICLK	CORE_X2_CLK	DPLL_CORE
	I2C3_FCLK	Func	96	PER_96M_GFCLK	FUNC_192M_CLK	DPLL_PER
I2C4	I2C4_ICLK	Int	266	L4PER_L3_GICLK	CORE_X2_CLK	DPLL_CORE
	I2C4_FCLK	Func	96	PER_96M_GFCLK	FUNC_192M_CLK	DPLL_PER
I2C5	I2C5_ICLK	Int	266	IPU_L3_GICLK	CORE_X2_CLK	DPLL_CORE
	I2C5_FCLK	Func	96	IPU_96M_GFCLK	FUNC_192M_CLK	DPLL_PER
IEEE1500_2_OCP	PI_L3CLK	Int & Func	266	L3INIT_L3_GICLK	CORE_X2_CLK	DPLL_CORE
IPU1	IPU1_GFCLK	Int & Func	425.6	IPU1_GFCLK	DPLL_ABE_X2_CLK	DPLL_ABE
					CORE_IPU_ISS_BOOST_CLK	DPLL_CORE
IPU2	IPU2_GFCLK	Int & Func	425.6	IPU2_GFCLK	CORE_IPU_ISS_BOOST_CLK	DPLL_CORE
IVA	IVA_GCLK	Int	IVA_GCLK	IVA_GCLK	IVA_GFCLK	DPLL_IVA

Copyright © 2015–2019, Texas Instruments Incorporated

表 5-9. Maximum Supported Frequency (continued)

Module				Clock Sources		
Instance Name	Input Clock Name	Clock Type	Max. Clock Allowed (MHz)	PRCM Clock Name	PLL / OSC / Source Clock Name	PLL / OSC / Source Name
KBD	KBD_FCLK	Func	0.032	WKUPAON_SYS_GFCLK	WKUPAON_32K_GFCLK	OSC1
	PICLKKBD	Func	0.032	WKUPAON_SYS_GFCLK	RTC Oscillator	
	KBD_ICLK	Int	38.4	WKUPAON_GICLK	SYS_CLK1	OSC1
	PICLKOCP	Int	38.4	WKUPAON_GICLK	DPLL_ABE_X2_CLK	DPLL_ABE
L3_INSTR	L3_CLK	Int	L3_CLK	L3INSTR_L3_GICLK	CORE_X2_CLK	DPLL_CORE
L3_MAIN	L3_CLK1	Int	L3_CLK	L3MAIN1_L3_GICLK	CORE_X2_CLK	DPLL_CORE
	L3_CLK2	Int	L3_CLK	L3INSTR_L3_GICLK	CORE_X2_CLK	DPLL_CORE
L4_CFG	L4_CFG_CLK	Int	133	L4CFG_L3_GICLK	CORE_X2_CLK	DPLL_CORE
L4_PER1	L4_PER1_CLK	Int	133	L4PER_L3_GICLK	CORE_X2_CLK	DPLL_CORE
L4_PER2	L4_PER2_CLK	Int	133	L4PER2_L3_GICLK	CORE_X2_CLK	DPLL_CORE
L4_PER3	L4_PER3_CLK	Int	133	L4PER3_L3_GICLK	CORE_X2_CLK	DPLL_CORE
L4_WKUP	L4_WKUP_CLK	Int	38.4	WKUPAON_GICLK	SYS_CLK1	OSC1
					DPLL_ABE_X2_CLK	DPLL_ABE
MAILBOX1	MAILBOX1_FLCK	Int	266	L4CFG_L3_GICLK	CORE_X2_CLK	DPLL_CORE
MAILBOX2	MAILBOX2_FLCK	Int	266	L4CFG_L3_GICLK	CORE_X2_CLK	DPLL_CORE
MAILBOX3	MAILBOX3_FLCK	Int	266	L4CFG_L3_GICLK	CORE_X2_CLK	DPLL_CORE
MAILBOX4	MAILBOX4_FLCK	Int	266	L4CFG_L3_GICLK	CORE_X2_CLK	DPLL_CORE
MAILBOX5	MAILBOX5_FLCK	Int	266	L4CFG_L3_GICLK	CORE_X2_CLK	DPLL_CORE
MAILBOX6	MAILBOX6_FLCK	Int	266	L4CFG_L3_GICLK	CORE_X2_CLK	DPLL_CORE
MAILBOX7	MAILBOX7_FLCK	Int	266	L4CFG_L3_GICLK	CORE_X2_CLK	DPLL_CORE
MAILBOX8	MAILBOX8_FLCK	Int	266	L4CFG_L3_GICLK	CORE_X2_CLK	DPLL_CORE
MAILBOX9	MAILBOX9_FLCK	Int	266	L4CFG_L3_GICLK	CORE_X2_CLK	DPLL_CORE
MAILBOX10	MAILBOX10_FLCK	Int	266	L4CFG_L3_GICLK	CORE_X2_CLK	DPLL_CORE
MAILBOX11	MAILBOX11_FLCK	Int	266	L4CFG_L3_GICLK	CORE_X2_CLK	DPLL_CORE
MAILBOX12	MAILBOX12_FLCK	Int	266	L4CFG_L3_GICLK	CORE_X2_CLK	DPLL_CORE
MAILBOX13	MAILBOX13_FLCK	Int	266	L4CFG_L3_GICLK	CORE_X2_CLK	DPLL_CORE

Copyright © 2015–2019, Texas Instruments Incorporated

表 5-9. Maximum Supported Frequency (continued)

Module				Clock Sources		
Instance Name	Input Clock Name	Clock Type	Max. Clock Allowed (MHz)	PRCM Clock Name	PLL / OSC / Source Clock Name	PLL / OSC / Source Name
McASP1	MCASP1_AHCLKR	Func	100	MCASP1_AHCLKR	DPLL_ABE_X2_CLK	DPLL_ABE
					SYS_CLK1	OSC1
					FUNC_96M_AON_CLK	DPLL_PER
					SYS_CLK2	OSC2
					XREF_CLK0	XREF_CLK0
					XREF_CLK1	XREF_CLK1
					XREF_CLK2	XREF_CLK2
					XREF_CLK3	XREF_CLK3
					MLB_CLK	Module MLB
					MLBP_CLK	Module MLB
	MCASP1_AHCLKX	Func	100	MCASP1_AHCLKX	DPLL_ABE_X2_CLK	DPLL_ABE
					SYS_CLK1	OSC1
					FUNC_96M_AON_CLK	DPLL_PER
					SYS_CLK2	OSC2
					XREF_CLK0	XREF_CLK0
					XREF_CLK1	XREF_CLK1
					XREF_CLK2	XREF_CLK2
					XREF_CLK3	XREF_CLK3
					MLB_CLK	Module MLB
					MLBP_CLK	Module MLB
	MCASP1_FCLK	Func	192	MCASP1_AUX_GFCLK	PER_ABE_X1_GFCLK	DPLL_ABE
					VIDEO1_CLK	DPLL_VIDEO1
					VIDEO2_CLK	DPLL_VIDEO2
					HDMI_CLK	DPLL_HDMI
	MCASP1_ICLK	Int	266	IPU_L3_GICLK	CORE_X2_CLK	DPLL_CORE

Copyright © 2015–2019, Texas Instruments Incorporated

表 5-9. Maximum Supported Frequency (continued)

Module				Clock Sources		
Instance Name	Input Clock Name	Clock Type	Max. Clock Allowed (MHz)	PRCM Clock Name	PLL / OSC / Source Clock Name	PLL / OSC / Source Name
McASP2	MCASP2_AHCLKR	Func	100	MCASP2_AHCLKR	DPLL_ABE_X2_CLK	DPLL_ABE
					SYS_CLK1	OSC1
					FUNC_96M_AON_CLK	DPLL_PER
					SYS_CLK2	OSC2
					XREF_CLK0	XREF_CLK0
					XREF_CLK1	XREF_CLK1
					XREF_CLK2	XREF_CLK2
					XREF_CLK3	XREF_CLK3
					MLB_CLK	Module MLB
					MLBP_CLK	Module MLB
	MCASP2_AHCLKX	Func	100	MCASP2_AHCLKX	DPLL_ABE_X2_CLK	DPLL_ABE
					SYS_CLK1	OSC1
					FUNC_96M_AON_CLK	DPLL_PER
					SYS_CLK2	OSC2
					XREF_CLK0	XREF_CLK0
					XREF_CLK1	XREF_CLK1
					XREF_CLK2	XREF_CLK2
					XREF_CLK3	XREF_CLK3
					MLB_CLK	Module MLB
					MLBP_CLK	Module MLB
	MCASP2_FCLK	Func	192	MCASP2_AUX_GFCLK	PER_ABE_X1_GFCLK	DPLL_ABE
					VIDEO1_CLK	DPLL_VIDEO1
					VIDEO2_CLK	DPLL_VIDEO2
					HDMI_CLK	DPLL_HDMI
	MCASP2_ICLK	Int	266	L4PER2_L3_GICLK	CORE_X2_CLK	DPLL_CORE
McASP3	MCASP3_AHCLKX	Func	100	MCASP3_AHCLKX	DPLL_ABE_X2_CLK	DPLL_ABE
					SYS_CLK1	OSC1
					FUNC_96M_AON_CLK	DPLL_PER
					SYS_CLK2	OSC2
					XREF_CLK0	XREF_CLK0
					XREF_CLK1	XREF_CLK1
					XREF_CLK2	XREF_CLK2
					XREF_CLK3	XREF_CLK3
					MLB_CLK	Module MLB
					MLBP_CLK	Module MLB
	MCASP3_FCLK	Func	192	MCASP3_AUX_GFCLK	PER_ABE_X1_GFCLK	DPLL_ABE
					VIDEO1_CLK	DPLL_ABE
					VIDEO2_CLK	DPLL_VIDEO2
					HDMI_CLK	DPLL_HDMI
	MCASP3_ICLK	Int	266	L4PER2_L3_GICLK	CORE_X2_CLK	DPLL_CORE

表 5-9. Maximum Supported Frequency (continued)

Module				Clock Sources		
Instance Name	Input Clock Name	Clock Type	Max. Clock Allowed (MHz)	PRCM Clock Name	PLL / OSC / Source Clock Name	PLL / OSC / Source Name
McASP4	MCASP4_AHCLKX	Func	100	MCASP4_AHCLKX	DPLL_ABE_X2_CLK	DPLL_ABE
					SYS_CLK1	OSC1
					FUNC_96M_AON_CLK	DPLL_PER
					SYS_CLK2	OSC2
					XREF_CLK0	XREF_CLK0
					XREF_CLK1	XREF_CLK1
					XREF_CLK2	XREF_CLK2
					XREF_CLK3	XREF_CLK3
					MLB_CLK	Module MLB
					MLBP_CLK	Module MLB
	MCASP4_FCLK	Func	192	MCASP4_AUX_GFCLK	PER_ABE_X1_GFCLK	DPLL_ABE
					VIDEO1_CLK	DPLL_ABE
					VIDEO2_CLK	DPLL_VIDEO2
					HDMI_CLK	DPLL_HDMI
	MCASP4_ICLK	Int	266	L4PER2_L3_GICLK	CORE_X2_CLK	DPLL_CORE
McASP5	MCASP5_AHCLKX	Func	100	MCASP5_AHCLKX	DPLL_ABE_X2_CLK	DPLL_ABE
					SYS_CLK1	OSC1
					FUNC_96M_AON_CLK	DPLL_PER
					SYS_CLK2	OSC2
					XREF_CLK0	XREF_CLK0
					XREF_CLK1	XREF_CLK1
					XREF_CLK2	XREF_CLK2
					XREF_CLK3	XREF_CLK3
					MLB_CLK	Module MLB
					MLBP_CLK	Module MLB
	MCASP5_FCLK	Func	192	MCASP5_AUX_GFCLK	PER_ABE_X1_GFCLK	DPLL_ABE
					VIDEO1_CLK	DPLL_ABE
					VIDEO2_CLK	DPLL_VIDEO2
					HDMI_CLK	DPLL_HDMI
	MCASP5_ICLK	Int	266	L4PER2_L3_GICLK	CORE_X2_CLK	DPLL_CORE
McASP6	MCASP6_AHCLKX	Func	100	MCASP6_AHCLKX	DPLL_ABE_X2_CLK	DPLL_ABE
					FUNC_96M_AON_CLK	DPLL_PER
					MLB_CLK	Module MLB
					MLBP_CLK	Module MLB
					SYS_CLK1	OSC1
					SYS_CLK2	OSC2
					XREF_CLK0	XREF_CLK0
					XREF_CLK1	XREF_CLK1
					XREF_CLK2	XREF_CLK2
					XREF_CLK3	XREF_CLK3
	MCASP6_FCLK	Func	192	MCASP6_AUX_GFCLK	PER_ABE_X1_GFCLK	DPLL_ABE
					VIDEO1_CLK	DPLL_ABE
					VIDEO2_CLK	DPLL_VIDEO2
					HDMI_CLK	DPLL_HDMI
	MCASP6_ICLK	Int	266	L4PER2_L3_GICLK	CORE_X2_CLK	DPLL_CORE

Copyright © 2015–2019, Texas Instruments Incorporated

表 5-9. Maximum Supported Frequency (continued)

Module				Clock Sources		
Instance Name	Input Clock Name	Clock Type	Max. Clock Allowed (MHz)	PRCM Clock Name	PLL / OSC / Source Clock Name	PLL / OSC / Source Name
McASP7	MCASP7_AHCLKX	Func	100	MCASP7_AHCLKX	DPLL_ABE_X2_CLK	DPLL_ABE
					SYS_CLK1	OSC1
					FUNC_96M_AON_CLK	DPLL_PER
					SYS_CLK2	OSC2
					XREF_CLK0	XREF_CLK0
					XREF_CLK1	XREF_CLK1
					XREF_CLK2	XREF_CLK2
					XREF_CLK3	XREF_CLK3
					MLB_CLK	Module MLB
					MLBP_CLK	Module MLB
	MCASP7_FCLK	Func	192	MCASP7_AUX_GFCLK	PER_ABE_X1_GFCLK	DPLL_ABE
					VIDEO1_CLK	DPLL_ABE
					VIDEO2_CLK	DPLL_VIDEO2
					HDMI_CLK	DPLL_HDMI
	MCASP7_ICLK	Int	266	L4PER2_L3_GICLK	CORE_X2_CLK	DPLL_CORE
McASP8	MCASP8_AHCLKX	Func	100	MCASP8_AHCLKX	DPLL_ABE_X2_CLK	DPLL_ABE
					SYS_CLK1	OSC1
					FUNC_96M_AON_CLK	DPLL_PER
					SYS_CLK2	OSC2
					XREF_CLK0	XREF_CLK0
					XREF_CLK1	XREF_CLK1
					XREF_CLK2	XREF_CLK2
					XREF_CLK3	XREF_CLK3
					MLB_CLK	Module MLB
					MLBP_CLK	Module MLB
	MCASP8_FCLK	Func	192	MCASP8_AUX_GFCLK	PER_ABE_X1_GFCLK	DPLL_ABE
					VIDEO1_CLK	DPLL_ABE
					VIDEO2_CLK	DPLL_VIDEO2
					HDMI_CLK	DPLL_HDMI
	MCASP8_ICLK	Int	266	L4PER2_L3_GICLK	CORE_X2_CLK	DPLL_CORE
McSPI1	SPI1_ICLK	Int	266	L4PER_L3_GICLK	CORE_X2_CLK	DPLL_CORE
	SPI1_FCLK	Func	48	PER_48M_GFCLK	PER_48M_GFCLK	DPLL_PER
McSPI2	SPI2_ICLK	Int	266	L4PER_L3_GICLK	CORE_X2_CLK	DPLL_CORE
	SPI2_FCLK	Func	48	PER_48M_GFCLK	PER_48M_GFCLK	DPLL_PER
McSPI3	SPI3_ICLK	Int	266	L4PER_L3_GICLK	CORE_X2_CLK	DPLL_CORE
	SPI3_FCLK	Func	48	PER_48M_GFCLK	PER_48M_GFCLK	DPLL_PER
McSPI4	SPI4_ICLK	Int	266	L4PER_L3_GICLK	CORE_X2_CLK	DPLL_CORE
	SPI4_FCLK	Func	48	PER_48M_GFCLK	PER_48M_GFCLK	DPLL_PER
MLB_SS	MLB_L3_ICLK	Int	266	MLB_SHB_L3_GICLK	CORE_X2_CLK	DPLL_CORE
	MLB_L4_ICLK	Int	133	MLB_SPB_L4_GICLK	CORE_X2_CLK	DPLL_CORE
	MLB_FCLK	Func	266	MLB_SYS_L3_GFCLK	CORE_X2_CLK	DPLL_CORE
MMC1	MMC1_CLK_32K	Func	0.032	L3INIT_32K_GFCLK	FUNC_32K_CLK	OSC1
	MMC1_FCLK	Func	192	MMC1_GFCLK	FUNC_192M_CLK	DPLL_PER
			128		FUNC_256M_CLK	DPLL_PER
	MMC1_ICLK1	Int	266	L3INIT_L3_GICLK	CORE_X2_CLK	DPLL_CORE
	MMC1_ICLK2	Int	133	L3INIT_L4_GICLK	CORE_X2_CLK	DPLL_CORE

Copyright © 2015–2019, Texas Instruments Incorporated

表 5-9. Maximum Supported Frequency (continued)

Module				Clock Sources		
Instance Name	Input Clock Name	Clock Type	Max. Clock Allowed (MHz)	PRCM Clock Name	PLL / OSC / Source Clock Name	PLL / OSC / Source Name
MMC2	MMC2_CLK_32K	Func	0.032	L3INIT_32K_GFCLK	FUNC_32K_CLK	OSC1
	MMC2_FCLK	Func	192	MMC2_GFCLK	FUNC_192M_CLK	DPLL_PER
			128		FUNC_256M_CLK	DPLL_PER
	MMC2_ICLK1	Int	266	L3INIT_L3_GICLK	CORE_X2_CLK	DPLL_CORE
	MMC2_ICLK2	Int	133	L3INIT_L4_GICLK	CORE_X2_CLK	DPLL_CORE
MMC3	MMC3_ICLK	Int	266	L4PER_L3_GICLK	CORE_X2_CLK	DPLL_CORE
	MMC3_CLK_32K	Func	0.032	L4PER_32K_GFCLK	FUNC_32K_CLK	OSC1
	MMC3_FCLK	Func	48	MMC3_GFCLK	FUNC_192M_CLK	DPLL_PER
			192			
MMC4	MMC4_ICLK	Int	266	L4PER_L3_GICLK	CORE_X2_CLK	DPLL_CORE
	MMC4_CLK_32K	Func	0.032	L4PER_32K_GFCLK	FUNC_32K_CLK	OSC1
	MMC4_FCLK	Func	48	MMC4_GFCLK	FUNC_192M_CLK	DPLL_PER
			192			
MMU_EDMA	MMU1_CLK	Int	266	L3MAIN1_L3_GICLK	CORE_X2_CLK	DPLL_CORE
MMU_PCIESS	MMU2_CLK	Int	266	L3MAIN1_L3_GICLK	CORE_X2_CLK	DPLL_CORE
MPU	MPU_CLK	Int & Func	MPU_CLK	MPU_GCLK	MPU_GCLK	DPLL_MPU
MPU_EMU_DBG	FCLK	Int	38.4	EMU_SYS_CLK	SYS_CLK1	OSC1
					MPU_GCLK	DPLL_MPU
OCMC_RAM1	OCMC1_L3_CLK	Int	266	L3MAIN1_L3_GICLK	CORE_X2_CLK	DPLL_CORE
OCMC_RAM2	OCMC2_L3_CLK	Int	266	L3MAIN1_L3_GICLK	CORE_X2_CLK	DPLL_CORE
OCMC_RAM3	OCMC3_L3_CLK	Int	266	L3MAIN1_L3_GICLK	CORE_X2_CLK	DPLL_CORE
OCMC_ROM	OCMC_L3_CLK	Int	266	L3MAIN1_L3_GICLK	CORE_X2_CLK	DPLL_CORE
OCP_WP_NOC	PICLKOCPL3	Int	266	L3INSTR_L3_GICLK	CORE_X2_CLK	DPLL_CORE
OCP2SCP1	L4CFG1_ADAPTER_CLKIN	Int	133	L3INIT_L4_GICLK	CORE_X2_CLK	DPLL_CORE
OCP2SCP2	L4CFG2_ADAPTER_CLKIN	Int	133	L4CFG_L4_GICLK	CORE_X2_CLK	DPLL_CORE
OCP2SCP3	L4CFG3_ADAPTER_CLKIN	Int	133	L3INIT_L4_GICLK	CORE_X2_CLK	DPLL_CORE
PCIe_SS1	PCIE1_PHY_WKUP_CLK	Func	0.032	PCIE_32K_GFCLK	FUNC_32K_CLK	RTC Oscillator
	PCIe_SS1_FICLK	Int	266	PCIE_L3_GICLK	CORE_X2_CLK	DPLL_CORE
	PCIEPHY_CLK	Func	2500	PCIE_PHY_GCLK	PCIE_PHY_GCLK	APLL_PCIE
	PCIEPHY_CLK_DIV	Func	1250	PCIE_PHY_DIV_GCLK	PCIE_PHY_DIV_GCLK	APLL_PCIE
	PCIE1_REF_CLKIN	Func	34.3	PCIE_REF_GFCLK	CORE_USB_OTG_SS_LFPS_TX_CLK	DPLL_CORE
	PCIE1_PWR_CLK	Func	38.4	PCIE_SYS_GFCLK	SYS_CLK1	OSC1
PCIe_SS2	PCIE2_PHY_WKUP_CLK	Func	0.032	PCIE_32K_GFCLK	FUNC_32K_CLK	RTC Oscillator
	PCIe_SS2_FICLK	Func	266	PCIE_L3_GICLK	CORE_X2_CLK	DPLL_CORE
	PCIEPHY_CLK	Func	2500	PCIE_PHY_GCLK	PCIE_PHY_GCLK	APLL_PCIE
	PCIEPHY_CLK_DIV	Func	1250	PCIE_PHY_DIV_GCLK	PCIE_PHY_DIV_GCLK	APLL_PCIE
	PCIE2_REF_CLKIN	Func	34.3	PCIE_REF_GFCLK	CORE_USB_OTG_SS_LFPS_TX_CLK	DPLL_CORE
	PCIE2_PWR_CLK	Func	38.4	PCIE_SYS_GFCLK	SYS_CLK1	OSC1

Copyright © 2015–2019, Texas Instruments Incorporated

表 5-9. Maximum Supported Frequency (continued)

Module				Clock Sources		
Instance Name	Input Clock Name	Clock Type	Max. Clock Allowed (MHz)	PRCM Clock Name	PLL / OSC / Source Clock Name	PLL / OSC / Source Name
PRCM_MPU	32K_CLK	Func	0.032	FUNC_32K_CLK	SYS_CLK1/610	OSC1
	SYS_CLK	Func	38.4	WKUPAON_ICLK	SYS_CLK1	OSC1
					DPLL_ABE_X2_CLK	DPLL_ABE
PRU-ICSS1	PRUSS1_IEP_CLK	Func	200	ICSS_IEP_CLK	ICSS_IEP_CLK	DPLL_GMAC
	PRUSS1_GICLK	Int	200	ICSS_CLK	ICSS_CLK	DPLL_GMAC
	PRUSS1_UART_GFCLK	Func	192	PER_192M_GFCLK	FUNC_192M_CLK	DPLL_PER
PRU-ICSS2	PRUSS2_IEP_CLK	Func	200	ICSS_IEP_CLK	ICSS_IEP_CLK	DPLL_GMAC
	PRUSS2_GICLK	Int	200	ICSS_CLK	ICSS_CLK	DPLL_GMAC
	PRUSS2_UART_GFCLK	Func	192	PER_192M_GFCLK	FUNC_192M_CLK	DPLL_PER
PWMSS1	PWMSS1_GICLK	Int & Func	266	L4PER2_L3_GICLK	CORE_X2_CLK	DPLL_CORE
PWMSS2	PWMSS2_GICLK	Int & Func	266	L4PER2_L3_GICLK	CORE_X2_CLK	DPLL_CORE
PWMSS3	PWMSS3_GICLK	Int & Func	266	L4PER2_L3_GICLK	CORE_X2_CLK	DPLL_CORE
QSPI	QSPI_ICLK	Int	266	L4PER2_L3_GICLK	CORE_X2_CLK	DPLL_CORE
	QSPI_FCLK	Func	128	QSPI_GFCLK	FUNC_256M_CLK	DPLL_PER
					PER_QSPI_CLK	DPLL_PER
RNG	RNG_ICLK	Int	266	L4SEC_L3_GICLK	CORE_X2_CLK	DPLL_CORE
RTC_SS	RTC_ICLK	Int	133	RTC_L4_GICLK	CORE_X2_CLK	DPLL_CORE
	RTC_FCLK	Func	RTC_FCLK	RTC_AUX_CLK	FUNC_32K_CLK	RTC Oscillator
				FUNC_32K_CLK	SYS_CLK1/610	OSC1
SAR_ROM	PRCM_ROM_CLOCK	Int	266	L4CFG_L3_GICLK	CORE_X2_CLK	DPLL_CORE
SATA	SATA_FICLK	Int	266	L3INIT_L3_GICLK	CORE_X2_CLK	DPLL_CORE
	SATA_PMALIVE_FCLK	Func	48	L3INIT_48M_GFCLK	FUNC_192M_CLK	DPLL_PER
	REF_CLK	Func	38	SATA_REF_GFCLK	SYS_CLK1	OSC1
SDMA	SDMA_FCLK	Int & Func	266	DMA_L3_GICLK	CORE_X2_CLK	DPLL_CORE
SHA2MD51	SHAM_1_CLK	Int	266	L4SEC_L3_GICLK	CORE_X2_CLK	DPLL_CORE
SHA2MD52	SHAM_2_CLK	Int	266	L4SEC_L3_GICLK	CORE_X2_CLK	DPLL_CORE
SL2	IVA_GCLK	Int	IVA_GCLK	IVA_GCLK	IVA_GFCLK	DPLL_IVA
SMARTREFLEX_CORE	MCLK	Int	133	COREAON_L4_GICLK	CORE_X2_CLK	DPLL_CORE
	SYSCLK	Func	38.4	WKUPAON_ICLK	SYS_CLK1	OSC1
					DPLL_ABE_X2_CLK	DPLL_ABE
SMARTREFLEX_DSPEVE	MCLK	Int	133	COREAON_L4_GICLK	CORE_X2_CLK	DPLL_CORE
	SYSCLK	Func	38.4	WKUPAON_ICLK	SYS_CLK1	OSC1
					DPLL_ABE_X2_CLK	DPLL_ABE
SMARTREFLEX_GPU	MCLK	Int	133	COREAON_L4_GICLK	CORE_X2_CLK	DPLL_CORE
	SYSCLK	Func	38.4	WKUPAON_ICLK	SYS_CLK1	OSC1
					DPLL_ABE_X2_CLK	DPLL_ABE
SMARTREFLEX_IVAHD	MCLK	Int	133	COREAON_L4_GICLK	CORE_X2_CLK	DPLL_CORE
	SYSCLK	Func	38.4	WKUPAON_ICLK	SYS_CLK1	OSC1
					DPLL_ABE_X2_CLK	DPLL_ABE

Copyright © 2015–2019, Texas Instruments Incorporated

表 5-9. Maximum Supported Frequency (continued)

Module				Clock Sources		
Instance Name	Input Clock Name	Clock Type	Max. Clock Allowed (MHz)	PRCM Clock Name	PLL / OSC / Source Clock Name	PLL / OSC / Source Name
SMARTREFLEX_MPU	MCLK	Int	133	COREAON_L4_GICLK	CORE_X2_CLK	DPLL_CORE
	SYSCLK	Func	38.4	WKUPAON_ICLK	SYS_CLK1	OSC1
					DPLL_ABE_X2_CLK	DPLL_ABE
SPINLOCK	SPINLOCK_ICLK	Int	266	L4CFG_L3_GICLK	CORE_X2_CLK	DPLL_CORE
TIMER1	TIMER1_ICLK	Int	38.4	WKUPAON_GICLK	SYS_CLK1	OSC1
					DPLL_ABE_X2_CLK	DPLL_ABE
	TIMER1_FCLK	Func	100	TIMER1_GFCLK	SYS_CLK1	OSC1
					FUNC_32K_CLK	OSC1
						RTC Oscillator
					SYS_CLK2	OSC2
					XREF_CLK0	XREF_CLK0
					XREF_CLK1	XREF_CLK1
					XREF_CLK2	XREF_CLK2
					XREF_CLK3	XREF_CLK3
					DPLL_ABE_X2_CLK	DPLL_ABE
					VIDEO1_CLK	DPLL_VIDEO1
					VIDEO2_CLK	DPLL_VIDEO2
					HDMI_CLK	DPLL_HDMI
TIMER2	TIMER2_ICLK	Int	266	L4PER_L3_GICLK	CORE_X2_CLK	DPLL_CORE
	TIMER2_FCLK	Func	100	TIMER2_GFCLK	SYS_CLK1	OSC1
					FUNC_32K_CLK	OSC1
						RTC Oscillator
					SYS_CLK2	OSC2
					XREF_CLK0	XREF_CLK0
					XREF_CLK1	XREF_CLK1
					XREF_CLK2	XREF_CLK2
					XREF_CLK3	XREF_CLK3
					DPLL_ABE_X2_CLK	DPLL_ABE
					VIDEO1_CLK	DPLL_VIDEO1
					VIDEO2_CLK	DPLL_VIDEO2
					HDMI_CLK	DPLL_HDMI
TIMER3	TIMER3_ICLK	Int	266	L4PER_L3_GICLK	CORE_X2_CLK	DPLL_CORE
	TIMER3_FCLK	Func	100	TIMER3_GFCLK	SYS_CLK1	OSC1
					FUNC_32K_CLK	OSC1
						RTC Oscillator
					SYS_CLK2	OSC2
					XREF_CLK0	XREF_CLK0
					XREF_CLK1	XREF_CLK1
					XREF_CLK2	XREF_CLK2
					XREF_CLK3	XREF_CLK3
					DPLL_ABE_X2_CLK	DPLL_ABE
					VIDEO1_CLK	DPLL_VIDEO1
					VIDEO2_CLK	DPLL_VIDEO2
					HDMI_CLK	DPLL_HDMI

Copyright © 2015–2019, Texas Instruments Incorporated

表 5-9. Maximum Supported Frequency (continued)

Module				Clock Sources		
Instance Name	Input Clock Name	Clock Type	Max. Clock Allowed (MHz)	PRCM Clock Name	PLL / OSC / Source Clock Name	PLL / OSC / Source Name
TIMER4	TIMER4_ICLK	Int	266	L4PER_L3_GICLK	CORE_X2_CLK	DPLL_CORE
	TIMER4_FCLK	Func	100	TIMER4_GFCLK	SYS_CLK1	OSC1
					FUNC_32K_CLK	OSC1
						RTC Oscillator
					SYS_CLK2	OSC2
					XREF_CLK0	XREF_CLK0
					XREF_CLK1	XREF_CLK1
					XREF_CLK2	XREF_CLK2
					XREF_CLK3	XREF_CLK3
					DPLL_ABE_X2_CLK	DPLL_ABE
					VIDEO1_CLK	DPLL_VIDEO1
					VIDEO2_CLK	DPLL_VIDEO2
					HDMI_CLK	DPLL_HDMI
TIMER5	TIMER5_ICLK	Int	266	IPU_L3_GICLK	CORE_X2_CLK	DPLL_CORE
	TIMER5_FCLK	Func	100	TIMER5_GFCLK	SYS_CLK1	OSC1
					FUNC_32K_CLK	OSC1
						RTC Oscillator
					SYS_CLK2	OSC2
					XREF_CLK0	XREF_CLK0
					XREF_CLK1	XREF_CLK1
					XREF_CLK2	XREF_CLK2
					XREF_CLK3	XREF_CLK3
					DPLL_ABE_X2_CLK	DPLL_ABE
					VIDEO1_CLK	DPLL_VIDEO1
					VIDEO2_CLK	DPLL_VIDEO2
					HDMI_CLK	DPLL_HDMI
					CLKOUTMUX[0]	CLKOUTMUX[0]
TIMER6	TIMER6_ICLK	Int	266	IPU_L3_GICLK	CORE_X2_CLK	DPLL_CORE
	TIMER6_FCLK	Func	100	TIMER6_GFCLK	SYS_CLK1	OSC1
					FUNC_32K_CLK	OSC1
						RTC Oscillator
					SYS_CLK2	OSC2
					XREF_CLK0	XREF_CLK0
					XREF_CLK1	XREF_CLK1
					XREF_CLK2	XREF_CLK2
					XREF_CLK3	XREF_CLK3
					DPLL_ABE_X2_CLK	DPLL_ABE
					VIDEO1_CLK	DPLL_VIDEO1
					VIDEO2_CLK	DPLL_VIDEO2
					HDMI_CLK	DPLL_HDMI
					CLKOUTMUX[0]	CLKOUTMUX[0]

Copyright © 2015–2019, Texas Instruments Incorporated

表 5-9. Maximum Supported Frequency (continued)

Module				Clock Sources		
Instance Name	Input Clock Name	Clock Type	Max. Clock Allowed (MHz)	PRCM Clock Name	PLL / OSC / Source Clock Name	PLL / OSC / Source Name
TIMER7	TIMER7_ICLK	Int	266	IPU_L3_GICLK	CORE_X2_CLK	DPLL_CORE
	TIMER7_FCLK	Func	100	TIMER7_GFCLK	SYS_CLK1	OSC1
					FUNC_32K_CLK	OSC1
						RTC Oscillator
					SYS_CLK2	OSC2
					XREF_CLK0	XREF_CLK0
					XREF_CLK1	XREF_CLK1
					XREF_CLK2	XREF_CLK2
					XREF_CLK3	XREF_CLK3
					DPLL_ABE_X2_CLK	DPLL_ABE
					VIDEO1_CLK	DPLL_VIDEO1
					VIDEO2_CLK	DPLL_VIDEO2
					HDMI_CLK	DPLL_HDMI
					CLKOUTMUX[0]	CLKOUTMUX[0]
TIMER8	TIMER8_ICLK	Int	266	IPU_L3_GICLK	CORE_X2_CLK	DPLL_CORE
	TIMER8_FCLK	Func	100	TIMER8_GFCLK	SYS_CLK1	OSC1
					FUNC_32K_CLK	OSC1
						RTC Oscillator
					SYS_CLK2	OSC2
					XREF_CLK0	XREF_CLK0
					XREF_CLK1	XREF_CLK1
					XREF_CLK2	XREF_CLK2
					XREF_CLK3	XREF_CLK3
					DPLL_ABE_X2_CLK	DPLL_ABE
					VIDEO1_CLK	DPLL_VIDEO1
					VIDEO2_CLK	DPLL_VIDEO2
					HDMI_CLK	DPLL_HDMI
					CLKOUTMUX[0]	CLKOUTMUX[0]
TIMER9	TIMER9_ICLK	Int	266	L4PER_L3_GICLK	CORE_X2_CLK	DPLL_CORE
	TIMER9_FCLK	Func	100	TIMER9_GFCLK	SYS_CLK1	OSC1
					FUNC_32K_CLK	OSC1
						RTC Oscillator
					SYS_CLK2	OSC2
					XREF_CLK0	XREF_CLK0
					XREF_CLK1	XREF_CLK1
					XREF_CLK2	XREF_CLK2
					XREF_CLK3	XREF_CLK3
					DPLL_ABE_X2_CLK	DPLL_ABE
					VIDEO1_CLK	DPLL_VIDEO1
					VIDEO2_CLK	DPLL_VIDEO2
					HDMI_CLK	DPLL_HDMI

Copyright © 2015–2019, Texas Instruments Incorporated

表 5-9. Maximum Supported Frequency (continued)

Module				Clock Sources		
Instance Name	Input Clock Name	Clock Type	Max. Clock Allowed (MHz)	PRCM Clock Name	PLL / OSC / Source Clock Name	PLL / OSC / Source Name
TIMER10	TIMER10_ICLK	Int	266	L4PER_L3_GICLK	CORE_X2_CLK	DPLL_CORE
	TIMER10_FCLK	Func	100	TIMER10_GFCLK	SYS_CLK1	OSC1
					FUNC_32K_CLK	OSC1
						RTC Oscillator
					SYS_CLK2	OSC2
					XREF_CLK0	XREF_CLK0
					XREF_CLK1	XREF_CLK1
					XREF_CLK2	XREF_CLK2
					XREF_CLK3	XREF_CLK3
					DPLL_ABE_X2_CLK	DPLL_ABE
					VIDEO1_CLK	DPLL_VIDEO1
					VIDEO2_CLK	DPLL_VIDEO2
					HDMI_CLK	DPLL_HDMI
TIMER11	TIMER11_ICLK	Int	266	L4PER_L3_GICLK	CORE_X2_CLK	DPLL_CORE
	TIMER11_FCLK	Func	100	TIMER11_GFCLK	SYS_CLK1	OSC1
					FUNC_32K_CLK	OSC1
						RTC Oscillator
					SYS_CLK2	OSC2
					XREF_CLK0	XREF_CLK0
					XREF_CLK1	XREF_CLK1
					XREF_CLK2	XREF_CLK2
					XREF_CLK3	XREF_CLK3
					DPLL_ABE_X2_CLK	DPLL_ABE
					VIDEO1_CLK	DPLL_VIDEO1
					VIDEO2_CLK	DPLL_VIDEO2
					HDMI_CLK	DPLL_HDMI
TIMER12	TIMER12_ICLK	Int	38.4	WKUPAON_GICLK	SYS_CLK1	OSC1
					DPLL_ABE_X2_CLK	DPLL_ABE
	TIMER12_FCLK	Func	0.032	OSC_32K_CLK	RC_CLK	RC oscillator
TIMER13	TIMER13_ICLK	Int	266	L4PER3_L3_GICLK	CORE_X2_CLK	DPLL_CORE
	TIMER13_FCLK	Func	100	TIMER13_GFCLK	SYS_CLK1	OSC1
					FUNC_32K_CLK	OSC1
						RTC Oscillator
					SYS_CLK2	OSC2
					XREF_CLK0	XREF_CLK0
					XREF_CLK1	XREF_CLK1
					XREF_CLK2	XREF_CLK2
					XREF_CLK3	XREF_CLK3
					DPLL_ABE_X2_CLK	DPLL_ABE
					VIDEO1_CLK	DPLL_VIDEO1
					VIDEO2_CLK	DPLL_VIDEO2
					HDMI_CLK	DPLL_HDMI

Copyright © 2015–2019, Texas Instruments Incorporated

表 5-9. Maximum Supported Frequency (continued)

Module				Clock Sources		
Instance Name	Input Clock Name	Clock Type	Max. Clock Allowed (MHz)	PRCM Clock Name	PLL / OSC / Source Clock Name	PLL / OSC / Source Name
TIMER14	TIMER14_ICLK	Int	266	L4PER3_L3_GICLK	CORE_X2_CLK	DPLL_CORE
	TIMER14_FCLK	Func	100	TIMER14_GFCLK	SYS_CLK1	OSC1
					FUNC_32K_CLK	OSC1
						RTC Oscillator
					SYS_CLK2	OSC2
					XREF_CLK0	XREF_CLK0
					XREF_CLK1	XREF_CLK1
					XREF_CLK2	XREF_CLK2
					XREF_CLK3	XREF_CLK3
					DPLL_ABE_X2_CLK	DPLL_ABE
					VIDEO1_CLK	DPLL_VIDEO1
					VIDEO2_CLK	DPLL_VIDEO2
					HDMI_CLK	DPLL_HDMI
TIMER15	TIMER15_ICLK	Int	266	L4PER3_L3_GICLK	CORE_X2_CLK	DPLL_CORE
	TIMER15_FCLK	Func	100	TIMER15_GFCLK	SYS_CLK1	OSC1
					FUNC_32K_CLK	OSC1
						RTC Oscillator
					SYS_CLK2	OSC2
					XREF_CLK0	XREF_CLK0
					XREF_CLK1	XREF_CLK1
					XREF_CLK2	XREF_CLK2
					XREF_CLK3	XREF_CLK3
					DPLL_ABE_X2_CLK	DPLL_ABE
					VIDEO1_CLK	DPLL_VIDEO1
					VIDEO2_CLK	DPLL_VIDEO2
					HDMI_CLK	DPLL_HDMI
TIMER16	TIMER16_ICLK	Int	266	L4PER3_L3_GICLK	CORE_X2_CLK	DPLL_CORE
	TIMER16_FCLK	Func	100	TIMER16_GFCLK	SYS_CLK1	OSC1
					FUNC_32K_CLK	OSC1
						RTC Oscillator
					SYS_CLK2	OSC2
					XREF_CLK0	XREF_CLK0
					XREF_CLK1	XREF_CLK1
					XREF_CLK2	XREF_CLK2
					XREF_CLK3	XREF_CLK3
					DPLL_ABE_X2_CLK	DPLL_ABE
					VIDEO1_CLK	DPLL_VIDEO1
					VIDEO2_CLK	DPLL_VIDEO2
					HDMI_CLK	DPLL_HDMI
TPCC	TPCC_GCLK	Int	266	L3MAIN1_L3_GICLK	CORE_X2_CLK	DPLL_CORE
TPTC1	TPTC0_GCLK	Int	266	L3MAIN1_L3_GICLK	CORE_X2_CLK	DPLL_CORE
TPTC2	TPTC1_GCLK	Int	266	L3MAIN1_L3_GICLK	CORE_X2_CLK	DPLL_CORE
UART1	UART1_FCLK	Func	48	UART1_GFCLK	FUNC_192M_CLK	DPLL_PER
	UART1_ICLK	Int	266	L4PER_L3_GICLK	CORE_X2_CLK	DPLL_CORE
UART2	UART2_FCLK	Func	48	UART2_GFCLK	FUNC_192M_CLK	DPLL_PER
	UART2_ICLK	Int	266	L4PER_L3_GICLK	CORE_X2_CLK	DPLL_CORE

Copyright © 2015–2019, Texas Instruments Incorporated

表 5-9. Maximum Supported Frequency (continued)

Module				Clock Sources		
Instance Name	Input Clock Name	Clock Type	Max. Clock Allowed (MHz)	PRCM Clock Name	PLL / OSC / Source Clock Name	PLL / OSC / Source Name
UART3	UART3_FCLK	Func	48	UART3_GFCLK	FUNC_192M_CLK	DPLL_PER
	UART3_ICLK	Int	266	L4PER_L3_GICLK	CORE_X2_CLK	DPLL_CORE
UART4	UART4_FCLK	Func	48	UART4_GFCLK	FUNC_192M_CLK	DPLL_PER
	UART4_ICLK	Int	266	L4PER_L3_GICLK	CORE_X2_CLK	DPLL_CORE
UART5	UART5_FCLK	Func	48	UART5_GFCLK	FUNC_192M_CLK	DPLL_PER
	UART5_ICLK	Int	266	L4PER_L3_GICLK	CORE_X2_CLK	DPLL_CORE
UART6	UART6_FCLK	Func	48	UART6_GFCLK	FUNC_192M_CLK	DPLL_PER
	UART6_ICLK	Int	266	IPU_L3_GICLK	CORE_X2_CLK	DPLL_CORE
UART7	UART7_FCLK	Func	48	UART7_GFCLK	FUNC_192M_CLK	DPLL_PER
	UART7_ICLK	Int	266	L4PER2_L3_GICLK	CORE_X2_CLK	DPLL_CORE
UART8	UART8_FCLK	Func	48	UART8_GFCLK	FUNC_192M_CLK	DPLL_PER
	UART8_ICLK	Int	266	L4PER2_L3_GICLK	CORE_X2_CLK	DPLL_CORE
UART9	UART9_FCLK	Func	48	UART9_GFCLK	FUNC_192M_CLK	DPLL_PER
	UART9_ICLK	Int	266	L4PER2_L3_GICLK	CORE_X2_CLK	DPLL_CORE
UART10	UART10_FCLK	Func	48	UART10_GFCLK	FUNC_192M_CLK	DPLL_PER
	UART10_ICLK	Int	38.4	WKUPAON_GICLK	SYS_CLK1	OSC1
					DPLL_ABE_X2_CLK	DPLL_ABE
USB1	USB1_MICLK	Int	266	L3INIT_L3_GICLK	CORE_X2_CLK	DPLL_CORE
	USB3PHY_REF_CLK	Func	34.3	USB_LFPS_TX_GFCLK	CORE_USB_OTG_SS_LFPS_TX_CLK	DPLL_CORE
	USB2PHY1_TREF_CLK	Func	38.4	USB_OTG_SS_REF_CLK	SYS_CLK1	OSC1
	USB2PHY1_REF_CLK	Func	960	L3INIT_960M_GFCLK	L3INIT_960_GFCLK	DPLL_USB
USB2	USB2_MICLK	Int	266	L3INIT_L3_GICLK	CORE_X2_CLK	DPLL_CORE
	USB2PHY2_TREF_CLK	Func	38.4	USB_OTG_SS_REF_CLK	SYS_CLK1	OSC1
	USB2PHY2_REF_CLK	Func	960	L3INIT_960M_GFCLK	L3INIT_960_GFCLK	DPLL_USB
USB_PHY1_CORE	USB2PHY1_WKUP_CLK	Func	0.032	COREAON_32K_GFCLK	SYS_CLK1/610	OSC1
USB_PHY2_CORE	USB2PHY2_WKUP_CLK	Func	0.032	COREAON_32K_GFCLK	SYS_CLK1/610	OSC1
USB_PHY3_CORE	USB3PHY_WKUP_CLK	Func	0.032	COREAON_32K_GFCLK	SYS_CLK1/610	OSC1
VIP1	L3_CLK_PROC_CLK	Int & Func	266	VIP1_GCLK	CORE_X2_CLK	DPLL_CORE
					CORE_ISS_MAIN_CLK	DPLL_CORE
VIP2	L3_CLK_PROC_CLK	Int & Func	266	VIP2_GCLK	CORE_X2_CLK	DPLL_CORE
					CORE_ISS_MAIN_CLK	DPLL_CORE
VIP3	L3_CLK_PROC_CLK	Int & Func	266	VIP3_GCLK	CORE_X2_CLK	DPLL_CORE
					CORE_ISS_MAIN_CLK	DPLL_CORE
VPE	L3_CLK_PROC_CLK	Int & Func	300	VPE_GCLK	CORE_ISS_MAIN_CLK	DPLL_CORE
					VIDEO1_CLKOUT4	DPLL_VIDEO1
WD_TIMER1	PIOCPCLK	Int	38.4	WKUPAON_GICLK	SYS_CLK1	OSC1
					DPLL_ABE_X2_CLK	DPLL_ABE
	PITIMERCLK	Func	0.032	OSC_32K_CLK	RC_CLK	RC oscillator

Copyright © 2015–2019, Texas Instruments Incorporated

表 5-9. Maximum Supported Frequency (continued)

Module				Clock Sources		
Instance Name	Input Clock Name	Clock Type	Max. Clock Allowed (MHz)	PRCM Clock Name	PLL / OSC / Source Clock Name	PLL / OSC / Source Name
WD_TIMER2	WD_TIMER2_ICLK	Int	38.4	WKUPAON_GICLK	SYS_CLK1	OSC1
					DPLL_ABE_X2_CLK	DPLL_ABE
	WD_TIMER2_FCLK	Func	0.032	WKUPAON_SYS_GFCLK	WKUPAON_32K_GFCLK	RTC Oscillator

5.6 Power Consumption Summary

注: Maximum power consumption for this SoC depends on the specific use conditions for the end system. Contact your TI representative for assistance in estimating maximum power consumption for the end system use case.

5.7 Electrical Characteristics

注: The data specified in 5.7.1 through 5.7.12 are subject to change.

注: The interfaces or signals described in 5.7.1 through 5.7.12 correspond to the interfaces or signals available in multiplexing mode 0 (Function 1).

All interfaces or signals multiplexed on the balls described in these tables have the same DC electrical characteristics, unless multiplexing involves a PHY/GPIO combination in which case different DC electrical characteristics are specified for the different multiplexing modes (Functions).

5.7.1 LVCMOS DDR DC Electrical Characteristics

表 5-10 summarizes the DC electrical characteristics for LVCMOS DDR Buffers.

注: For more information on the I/O cell configurations (i[2:0], sr[1:0]), see the Chapter *Control Module* of the Device TRM.

Copyright © 2015–2019, Texas Instruments Incorporated

表 5-10. LVCMOS DDR DC Electrical Characteristics

PARAMETER			MIN	NOM	MAX	UNIT
Signal Names in MUXMODE 0 (Single-Ended Signals): ddr1_d[31:0], ddr1_a[15:0], ddr1_dqm[3:0], ddr1_ba[2:0], ddr1_csn[0], ddr1_cke, ddr1_odt[0], ddr1_casn, ddr1_rasn, ddr1_wen, ddr1_rst, ddr1_ecc_d[7:0], ddr1_dqm_ecc, ddr2_d[31:0], ddr2_a[15:0], ddr2_dqm[3:0], ddr2_ba[2:0], ddr2_csn[0], ddr2_cke, ddr2_odt[0], ddr2_casn, ddr2_rasn, ddr2_wen, ddr2_rst;						
Balls: AA28 / AA25 / AA26 / Y24 / AA24 / Y23 / Y22 / AA23 / Y20 / AB27 / Y19 / AC27 / AC28 / AB28 / W20 / V20 / AD25 / AC24 / AC25 / AE26 / AF28 / AG27 / AF27 / AC23 / AE23 / AF23 / AE24 / AF24 / AH26 / AG26 / AF26 / AF25 / AD18 / AE17 / AF18 / AC21 / AD22 / AD21 / AE22 / AF22 / AE21 / AE21 / AH22 / AF21 / AB19 / AC20 / AC19 / AD20 / AA27 / AC26 / AB23 / AD23 / AB18 / AE18 / AF17 / AH23 / AG22 / AE20 / AC18 / AF20 / AH21 / AG21 / Y26 / V25 / V24 / Y25 / W23 / W19 / V23 / W22 / V26 / M26 / M25 / M24 / M23 / L28 / L25 / L26 / L27 / J20 / K22 / J23 / L24 / L23 / K21 / K20 / L22 / J24 / J26 / J25 / G26 / H26 / H24 / H25 / H23 / E28 / E27 / F27 / F26 / F24 / F25 / G25 / E26 / U22 / R22 / T22 / N28 / P26 / N23 / N27 / P27 / N20 / P25 / P22 / P23 / R27 / R28 / R26 / R25 / M22 / K23 / G24 / F28 / U26 / U27 / U23 / P24 / U24 / R23 / U28 / T23 / U25 / R24;						
Driver Mode						
V_{OH}	High-level output threshold (I_{OH} = 0.1 mA)		0.9*VDDS			V
V_{OL}	Low-level output threshold (I_{OL} = 0.1 mA)				0.1*VDDS	V
C_{PAD}	Pad capacitance (including package capacitance)				3	pF
Z_O	Output impedance (drive strength)	I[2:0] = 000 (Imp80)		80		Ω
		I[2:0] = 001 (Imp60)		60		
		I[2:0] = 010 (Imp48)		48		
		I[2:0] = 011 (Imp40)		40		
		I[2:0] = 100 (Imp34)		34		
Single-Ended Receiver Mode						
V_{IH}	High-level input threshold	DDR3/DDR3L	VREF+0.1		VDDS+0.2	V
V_{IL}	Low-level input threshold	DDR3/DDR3L	-0.2		VREF-0.1	V
V_{CM}	Input common-mode voltage		VREF -10%vdds		VREF+ 10%vdds	V
C_{PAD}	Pad capacitance (including package capacitance)				3	pF
Signal Names in MUXMODE 0 (Differential Signals): ddr1_dqs[3:0], ddr1_dqsn[3:0], ddr1_ck, ddr1_nck, ddr2_dqs[3:0], ddr2_dqsn[3:0], ddr2_ck, ddr2_nck, ddr1_dqs_ecc, ddr1_dqsn_ecc;						
Bottom Balls: Y28 / AD27 / AE27 / AH25 / Y27 / AD28 / AE28 / AG25 / AG24 / AH24 / M28 / K27 / H27 / G28 / M27 / K28 / H28 / G27 / T28 / T27 / V27 / V28;						
Driver Mode						
V_{OH}	High-level output threshold (I_{OH} = 0.1 mA)		0.9*VDDS			V
V_{OL}	Low-level output threshold (I_{OL} = 0.1 mA)				0.1*VDDS	V
C_{PAD}	Pad capacitance (including package capacitance)				3	pF
Z_O	Output impedance (drive strength)	I[2:0] = 000 (Imp80)		80		Ω
		I[2:0] = 001 (Imp60)		60		
		I[2:0] = 010 (Imp48)		48		
		I[2:0] = 011 (Imp40)		40		
		I[2:0] = 100 (Imp34)		34		
Single-Ended Receiver Mode						
V_{IH}	High-level input threshold	DDR3/DDR3L	VREF+0.1		VDDS+0.2	V
V_{IL}	Low-level input threshold	DDR3/DDR3L	-0.2		VREF-0.1	V
V_{CM}	Input common-mode voltage		VREF -10%vdds		VREF+ 10%vdds	V
C_{PAD}	Pad capacitance (including package capacitance)				3	pF

表 5-10. LVCMOS DDR DC Electrical Characteristics (continued)

PARAMETER			MIN	NOM	MAX	UNIT
Differential Receiver Mode						
V_{SWING}	Input voltage swing	DDR3/DDR3L	0.2		vdds+0.4	V
V_{CM}	Input common-mode voltage		VREF -10%vdds		VREF+ 10%vdds	
C_{PAD}	Pad capacitance (including package capacitance)				3	pF

(1) VDDS stands for corresponding power supply (that is vdds_ddr1 or vdds_ddr2). For more information on the power supply name and the corresponding ball, see 表 4-2, POWER [11] column.

(2) VREF in this table stands for corresponding Reference Power Supply (that is ddr1_vref0 or ddr2_vref0). For more information on the power supply name and the corresponding ball, see 表 4-2, POWER [11] column.

5.7.2 HDMIPHY DC Electrical Characteristics

The HDMIPHY DC Electrical Characteristics are compliant with the HDMI 1.4a specification and are not reproduced here.

5.7.3 Dual Voltage LVCMOS I²C DC Electrical Characteristics

表 5-11 summarizes the DC electrical characteristics for Dual Voltage LVCMOS I2C Buffers.

注: For more information on the I/O cell configurations, see the Control Module section of the Device TRM.

表 5-11. Dual Voltage LVCMOS I2C DC Electrical Characteristics

PARAMETER		MIN	NOM	MAX	UNIT
Signal Names in MUXMODE 0: i2c2_scl, i2c1_scl, i2c1_sda, i2c2_sda;					
Balls: F17 / C20 / C21 / C25;					
I²C Standard Mode – 1.8 V					
V_{IH}	Input high-level threshold	0.7*VDDS			V
V_{IL}	Input low-level threshold			0.3*VDDS	V
V_{hys}	Hysteresis	0.1*VDDS			V
I_{IN}	Input current at each I/O pin with an input voltage between 0.1*VDDS to 0.9*VDDS			12	µA
I_{OZ}	I_{OZ}(I_{PAD} Current) for BIDI cell. This current is contributed by the tristated driver leakage + input current of the Rx + weak pullup/pulldown leakage. PAD is swept from 0 to VDDS and the Max($I_{(PAD)}$) is measured and is reported as I_{OZ}			12	µA
C_{IN}	Input capacitance			10	pF
V_{OL3}	Output low-level threshold open-drain at 3-mA sink current			0.2*VDDS	V
I_{OLmin}	Low-level output current @V_{OL}=0.2*VDDS	3			mA
t_{OF}	Output fall time from V_{IHmin} to V_{ILmax} with a bus capacitance CB from 5 pF to 400 pF			250	ns
I²C Fast Mode – 1.8 V					
V_{IH}	Input high-level threshold	0.7*VDDS			V
V_{IL}	Input low-level threshold			0.3*VDDS	V
V_{hys}	Hysteresis	0.1*VDDS			V
I_{IN}	Input current at each I/O pin with an input voltage between 0.1*VDDS to 0.9*VDDS			12	µA

Copyright © 2015–2019, Texas Instruments Incorporated

表 5-11. Dual Voltage LVCMOS I2C DC Electrical Characteristics (continued)

PARAMETER		MIN	NOM	MAX	UNIT
I_{OZ}	I_{OZ}(I_{PAD} Current) for BIDI cell. This current is contributed by the tristated driver leakage + input current of the Rx + weak pullup/pulldown leakage. PAD is swept from 0 to VDDS and the Max($I_{(PAD)}$) is measured and is reported as I_{OZ}			12	µA
C_{IN}	Input capacitance			10	pF
V_{OL3}	Output low-level threshold open-drain at 3-mA sink current			0.2*VDDS	V
I_{OLmin}	Low-level output current @V_{OL}=0.2*VDDS	3			mA
t_{OF}	Output fall time from V_{IHmin} to V_{ILmax} with a bus capacitance CB from 10 pF to 400 pF	20+0.1*Cb		250	ns
I^2C Standard Mode – 3.3 V					
V_{IH}	Input high-level threshold	0.7*VDDS			V
V_{IL}	Input low-level threshold			0.3*VDDS	V
V_{hys}	Hysteresis	0.05*VDDS			V
I_{IN}	Input current at each I/O pin with an input voltage between 0.1*VDDS to 0.9*VDDS	31		80	µA
I_{OZ}	I_{OZ}(I_{PAD} Current) for BIDI cell. This current is contributed by the tristated driver leakage + input current of the Rx + weak pullup/pulldown leakage. PAD is swept from 0 to VDDS and the Max($I_{(PAD)}$) is measured and is reported as I_{OZ}	31		80	µA
C_{IN}	Input capacitance			10	pF
V_{OL3}	Output low-level threshold open-drain at 3-mA sink current			0.4	V
I_{OLmin}	Low-level output current @V_{OL}=0.4V	3			mA
I_{OLmin}	Low-level output current @V_{OL}=0.6V for full drive load (400pF/400KHz)	6			mA
t_{OF}	Output fall time from VIHmin to VILmax with a bus capacitance CB from 5 pF to 400 pF			250	ns
I^2C Fast Mode – 3.3 V					
V_{IH}	Input high-level threshold	0.7*VDDS			V
V_{IL}	Input low-level threshold			0.3*VDDS	V
V_{hys}	Hysteresis	0.05*VDDS			V
I_{IN}	Input current at each I/O pin with an input voltage between 0.1*VDDS to 0.9*VDDSS	31		80	µA
I_{OZ}	I_{OZ}(I_{PAD} Current) for BIDI cell. This current is contributed by the tristated driver leakage + input current of the Rx + weak pullup/pulldown leakage. PAD is swept from 0 to VDDS and the Max($I_{(PAD)}$) is measured and is reported as I_{OZ}	31		80	µA
C_{IN}	Input capacitance			10	pF
V_{OL3}	Output low-level threshold open-drain at 3-mA sink current			0.4	V
I_{OLmin}	Low-level output current @V_{OL}=0.4V	3			mA
I_{OLmin}	Low-level output current @V_{OL}=0.6V for full drive load (400pF/400KHz)	6			mA
t_{OF}	Output fall time from V_{IHmin} to V_{ILmax} with a bus capacitance CB from 10 pF to 200 pF (Proper External Resistor Value should be used as per I2C spec)	20+0.1*Cb		250	ns
	Output fall time from V_{IHmin} to V_{ILmax} with a bus capacitance CB from 300 pF to 400 pF (Proper External Resistor Value should be used as per I2C spec)	40		290	

(1) VDDS stands for corresponding power supply (that is vddshv3). For more information on the power supply name and the corresponding ball, see 表 4-2, POWER [11] column.

5.7.4 IQ1833 Buffers DC Electrical Characteristics

表 5-12 summarizes the DC electrical characteristics for IQ1833 Buffers.

表 5-12. IQ1833 Buffers DC Electrical Characteristics

PARAMETER		MIN	NOM	MAX	UNIT
Signal Names in MUXMODE 0: tclk;					
Balls: E20;					
1.8-V Mode					
V_{IH}	Input high-level threshold (Does not meet JEDEC V_{IH})	0.75 * VDDS			V
V_{IL}	Input low-level threshold (Does not meet JEDEC V_{IL})			0.25 * VDDS	V
V_{HYS}	Input hysteresis voltage	100			mV
I_{IN}	Input current at each I/O pin	2		11	µA
C_{PAD}	Pad capacitance (including package capacitance)			1	pF
3.3-V Mode					
V_{IH}	Input high-level threshold (Does not meet JEDEC V_{IH})	2.0			V
V_{IL}	Input low-level threshold (Does not meet JEDEC V_{IL})			0.6	V
V_{HYS}	Input hysteresis voltage	400			mV
I_{IN}	Input current at each I/O pin	5		11	µA
C_{PAD}	Pad capacitance (including package capacitance)			1	pF

(1) VDDS stands for corresponding power supply (that is vddshv3). For more information on the power supply name and the corresponding ball, see 表 4-2, POWER [11] column.

5.7.5 IHHV1833 Buffers DC Electrical Characteristics

表 5-13 summarizes the DC electrical characteristics for IHHV1833 Buffers.

表 5-13. IHHV1833 Buffers DC Electrical Characteristics

PARAMETER		MIN	NOM	MAX	UNIT
Signal Names in MUXMODE 0: porz, rtc_iso, rtc_porz, wakeup [3:0];					
Balls: F22 / AF14 / AB17 / AD17 / AC17 / AB16 / AC16;					
1.8-V Mode					
V_{IH}	Input high-level threshold	1.2[(1)]			V
V_{IL}	Input low-level threshold			0.4	V
V_{HYS}	Input hysteresis voltage	40			mV
I_{IN}	Input current at each I/O pin	0.02		1	µA
C_{PAD}	Pad capacitance (including package capacitance)			1	pF
3.3-V Mode					
V_{IH}	Input high-level threshold	1.2[(1)]			V
V_{IL}	Input low-level threshold			0.4	V
V_{HYS}	Input hysteresis voltage	40			mV
I_{IN}	Input current at each I/O pin	5		8	µA
C_{PAD}	Pad capacitance (including package capacitance)			1	pF

Copyright © 2015–2019, Texas Instruments Incorporated

(1) The IHHV1833 buffer exists in the dual-voltage IO logic that can be powered by either 1.8V or 3.3V provided by vddshv3. However, the vddshv3 supply is only used for input protection circuitry, not for logic functionality. The logic in this buffer operates entirely on the vdds18v supply. Therefore, IHHV control is asserted whenever the input is low and vdds18v is valid.

5.7.6 LVCMOS OSC Buffers DC Electrical Characteristics

表 5-14 summarizes the DC electrical characteristics for LVCMOS OSC Buffers.

表 5-14. LVCMOS OSC Buffers DC Electrical Characteristics

PARAMETER		MIN	NOM	MAX	UNIT
Signal Names in MUXMODE 0: rtc_osc_xi_clkin32 / rtc_osc_xo;					
Balls: AE14 / AD14;					
1.8-V Mode					
V_{IH}	Input high-level threshold	0.65 * VDDS			V
V_{IL}	Input low-level threshold			0.35 * VDDS	V
V_{HYS}	Input hysteresis voltage	150			mV
C_{PAD}	Pad capacitance (including package capacitance)			3	pF

(1) VDDS stands for corresponding power supply (that is vdda_rtc). For more information on the power supply name and the corresponding ball, see 表 4-2, POWER [11] column.

5.7.7 BC1833IHHV Buffers DC Electrical Characteristics

表 5-15 summarizes the DC electrical characteristics for BC1833IHHV Buffers.

表 5-15. BC1833IHHV Buffers DC Electrical Characteristics

PARAMETER		MIN	NOM	MAX	UNIT
Signal Names in MUXMODE 0: on_off;					
Balls: Y11;					
1.8-V Mode					
V_{OH}	Output high-level threshold (I_{OH} = 2 mA)	VDDS-0.45			V
V_{OL}	Output low-level threshold (I_{OL} = 2 mA)			0.45	V
I_{DRIVE}	Pin Drive strength at PAD Voltage = 0.45V or VDDS-0.45V	6			mA
I_{IN}	Input current at each I/O pin	6		12	µA
I_{OZ}	I_{OZ}(I_{PAD} Current) for BIDI cell. This current is contributed by the tristated driver leakage + input current of the Rx + weak pullup/pulldown leakage. PAD is swept from 0 to VDDS and the Max($I_{(PAD)}$) is measured and is reported as I_{OZ}			6	µA
C_{PAD}	Pad capacitance (including package capacitance)			4	pF
3.3-V Mode					
V_{OH}	Output high-level threshold (I_{OH} =100 µA)	VDDS-0.2			V
V_{OL}	Output low-level threshold (I_{OL} = 100 µA)			0.2	V
I_{DRIVE}	Pin Drive strength at PAD Voltage = 0.45V or VDDS-0.45V	6			mA
I_{IN}	Input current at each I/O pin			60	µA
I_{OZ}	I_{OZ}(I_{PAD} Current) for BIDI cell. This current is contributed by the tristated driver leakage + input current of the Rx + weak pullup/pulldown leakage. PAD is swept from 0 to VDDS and the Max($I_{(PAD)}$) is measured and is reported as I_{OZ}			60	µA
C_{PAD}	Pad capacitance (including package capacitance)			4	pF

(1) VDDS stands for corresponding power supply (that is vddshv5). For more information on the power supply name and the corresponding ball, see 表 4-2, POWER [11] column.

5.7.8 USBPHY DC Electrical Characteristics

注: USB1 instance is compliant with the USB3.0 SuperSpeed Transmitter and Receiver Normative Electrical Parameters as defined in the USB3.0 Specification Rev 1.0 dated June 6, 2011.

注: USB1 and USB2 Electrical Characteristics are compliant with USB2.0 Specification Rev 2.0 dated April 27, 2000 including ECNs and Errata as applicable.

5.7.9 Dual Voltage SDIO1833 DC Electrical Characteristics

表 5-16 summarizes the DC electrical characteristics for Dual Voltage SDIO1833 Buffers.

表 5-16. Dual Voltage SDIO1833 DC Electrical Characteristics

PARAMETER		MIN	NOM	MAX	UNIT
Signal Names in Mode 0: mmc1_clk, mmc1_cmd, mmc1_data[3:0];					
Bottom Balls: W6 / Y6 / AA6 / Y4 / AA5 / Y3;					
1.8-V Mode					
V_{IH}	Input high-level threshold	1.27			V
V_{IL}	Input low-level threshold			0.58	V
V_{HYS}	Input hysteresis voltage	50 (2)			mV
I_{IN}	Input current at each I/O pin			30	µA
I_{OZ}	I_{OZ}(I_{PAD} Current) for BIDI cell. This current is contributed by the tristated driver leakage + input current of the Rx + weak pullup/pulldown leakage. PAD is swept from 0 to VDDS and the Max(I(PAD)) is measured and is reported as I_{OZ}			30	µA
$I_{IN\ with\ pulldown\ enabled}$	Input current at each I/O pin with weak pulldown enabled measured when PAD = VDDS	50	120	210	µA
$I_{IN\ with\ pullup\ enabled}$	Input current at each I/O pin with weak pullup enabled measured when PAD = 0	60	120	200	µA
C_{PAD}	Pad capacitance (including package capacitance)			5	pF
V_{OH}	Output high-level threshold (I_{OH} = 2 mA)	1.4			V
V_{OL}	Output low-level threshold (I_{OL} = 2 mA)			0.45	V
3.3-V Mode					
V_{IH}	Input high-level threshold	0.625 × VDDS			V
V_{IL}	Input low-level threshold			0.25 × VDDS	V
V_{HYS}	Input hysteresis voltage	40 (2)			mV
I_{IN}	Input current at each I/O pin			110	µA
I_{OZ}	I_{OZ}(I_{PAD} Current) for BIDI cell. This current is contributed by the tristated driver leakage + input current of the Rx + weak pullup/pulldown leakage. PAD is swept from 0 to VDDS and the Max(I(PAD)) is measured and is reported as I_{OZ}			110	µA
$I_{IN\ with\ pulldown\ enabled}$	Input current at each I/O pin with weak pulldown enabled measured when PAD = VDDS	40	100	290	µA
$I_{IN\ with\ pullup\ enabled}$	Input current at each I/O pin with weak pullup enabled measured when PAD = 0	10	100	290	µA

Copyright © 2015–2019, Texas Instruments Incorporated

表 5-16. Dual Voltage SDIO1833 DC Electrical Characteristics (continued)

PARAMETER		MIN	NOM	MAX	UNIT
C_{PAD}	Pad capacitance (including package capacitance)			5	pF
V_{OH}	Output high-level threshold (I_{OH} = 2 mA)	0.75 × VDDS			V
V_{OL}	Output low-level threshold (I_{OL} = 2 mA)			0.125 × VDDS	V

(1) VDDS stands for corresponding power supply (that is vddshv8). For more information on the power supply name and the corresponding ball, see 表 4-2, POWER [11] column.

(2) Hysteresis is enabled/disabled with CTRL_CORE_CONTROL_HYST_1.SDCARD_HYST register.

5.7.10 Dual Voltage LVCMOS DC Electrical Characteristics

表 5-17 summarizes the DC electrical characteristics for Dual Voltage LVCMOS Buffers.

表 5-17. Dual Voltage LVCMOS DC Electrical Characteristics

PARAMETER		MIN	NOM	MAX	UNIT
1.8-V Mode					
V_{IH}	Input high-level threshold	0.65*VDDS			V
V_{IL}	Input low-level threshold			0.35*VDDS	V
V_{HYS}	Input hysteresis voltage	100			mV
V_{OH}	Output high-level threshold (I_{OH} = 2 mA)	VDDS-0.45			V
V_{OL}	Output low-level threshold (I_{OL} = 2 mA)			0.45	V
I_{DRIVE}	Pin Drive strength at PAD Voltage = 0.45V or VDDS-0.45V	6			mA
I_{IN}	Input current at each I/O pin			16	µA
I_{OZ}	I_{OZ}(I_{PAD} Current) for BIDI cell. This current is contributed by the tristated driver leakage + input current of the Rx + weak pullup/pulldown leakage. PAD is swept from 0 to VDDS and the Max($I_{(PAD)}$) is measured and is reported as I_{OZ}			16	µA
$I_{IN\ with\ pulldown\ enabled}$	Input current at each I/O pin with weak pulldown enabled measured when PAD = VDDS	50	120	210	µA
$I_{IN\ with\ pullup\ enabled}$	Input current at each I/O pin with weak pullup enabled measured when PAD = 0	60	120	200	µA
C_{PAD}	Pad capacitance (including package capacitance)			4	pF
Z_O	Output impedance (drive strength)		40		Ω
3.3-V Mode					
V_{IH}	Input high-level threshold	2			V
V_{IL}	Input low-level threshold			0.8	V
V_{HYS}	Input hysteresis voltage	200			mV
V_{OH}	Output high-level threshold (I_{OH} =100µA)	VDDS-0.2			V
V_{OL}	Output low-level threshold (I_{OL} = 100µA)			0.2	V
I_{DRIVE}	Pin Drive strength at PAD Voltage = 0.45V or VDDS-0.45V	6			mA
I_{IN}	Input current at each I/O pin			65	µA
I_{OZ}	I_{OZ}(I_{PAD} Current) for BIDI cell. This current is contributed by the tristated driver leakage + input current of the Rx + weak pullup/pulldown leakage. PAD is swept from 0 to VDDS and the Max($I_{(PAD)}$) is measured and is reported as I_{OZ}			65	µA
$I_{IN\ with\ pulldown\ enabled}$	Input current at each I/O pin with weak pulldown enabled measured when PAD = VDDS	40	100	200	µA
$I_{IN\ with\ pullup\ enabled}$	Input current at each I/O pin with weak pullup enabled measured when PAD = 0	10	100	290	µA
C_{PAD}	Pad capacitance (including package capacitance)			4	pF

Copyright © 2015–2019, Texas Instruments Incorporated

表 5-17. Dual Voltage LVCMOS DC Electrical Characteristics (continued)

PARAMETER		MIN	NOM	MAX	UNIT
Z_O	Output impedance (drive strength)		40		Ω

(1) VDDS stands for corresponding power supply. For more information on the power supply name and the corresponding ball, see 表 4-2, POWER [11] column.

5.7.11 SATAPHY DC Electrical Characteristics

注: The SATA module is compliant with the electrical parameters specified in the *SATA-IO SATA Specification*, Revision 3.2, August 7, 2013.

5.7.12 PCIEPHY DC Electrical Characteristics

注: The PCIe interfaces are compliant with the electrical parameters specified in PCI Express Base Specification Revision 3.0.

5.8 Thermal Characteristics

For reliability and operability concerns, the maximum junction temperature of the Device has to be at or below the T_J value identified in 表 5-4, *Recommended Operating Conditions*.

It is recommended to perform thermal simulations at the system level with the worst case device power consumption.

5.8.1 Package Thermal Characteristics

表 5-18 provides the thermal resistance characteristics for the package used on this device.

注: Power dissipation of 1.5 W and an ambient temperature of 85ºC is assumed for ABC package.

表 5-18. Thermal Resistance Characteristics (ABC Package)

NO.	PARAMETER	DESCRIPTION	°C/W[(1)]	AIR FLOW (m/s)[(2)]
T1	$R\Theta_{JC}$	Junction-to-case	0.82	N/A
T2	$R\Theta_{JB}$	Junction-to-board	3.78	N/A
T3	$R\Theta_{JA}$	Junction-to-free air	11.1	0
T4		Junction-to-moving air	8.8	1
T5			8.0	2
T6			7.5	3
T7	Ψ_{JT}	Junction-to-package top	0.62	0
T8			0.66	1
T9			0.66	2
T10			0.66	3
T11	Ψ_{JB}	Junction-to-board	3.43	0
T12			3.22	1
T13			3.12	2
T14			3.04	3

Copyright © 2015–2019, Texas Instruments Incorporated

(1) These values are based on a JEDEC defined 2S2P system (with the exception of the Theta JC [$R\Theta_{JC}$] value, which is based on a JEDEC defined 1S0P system) and will change based on environment as well as application. For more information, see these EIA/JEDEC standards:

- JESD51-2, *Integrated Circuits Thermal Test Method Environment Conditions - Natural Convection (Still Air)*
- JESD51-3, *Low Effective Thermal Conductivity Test Board for Leaded Surface Mount Packages*
- JESD51-6, *Integrated Circuit Thermal Test Method Environmental Conditions - Forced Convection (Moving Air)*
- JESD51-7, *High Effective Thermal Conductivity Test Board for Leaded Surface Mount Packages*
- JESD51-9, *Test Boards for Area Array Surface Mount Packages*

(2) m/s = meters per second

5.9 Power Supply Sequences

This section describes the power-up and power-down sequence required to ensure proper device operation. The power supply names described in this section comprise a superset of a family of compatible devices. Some members of this family will not include a subset of these power supplies and their associated device modules. Refer to the 4.2, *Ball Characteristics* of the 4, *Terminal Configuration and Functions* to determine which power supplies are applicable.

注: RTC only mode is not supported feature.

Copyright © 2015–2019, Texas Instruments Incorporated

図 5-2 and 図 5-3 describe the device Power Sequencing when RTC-mode is NOT used.

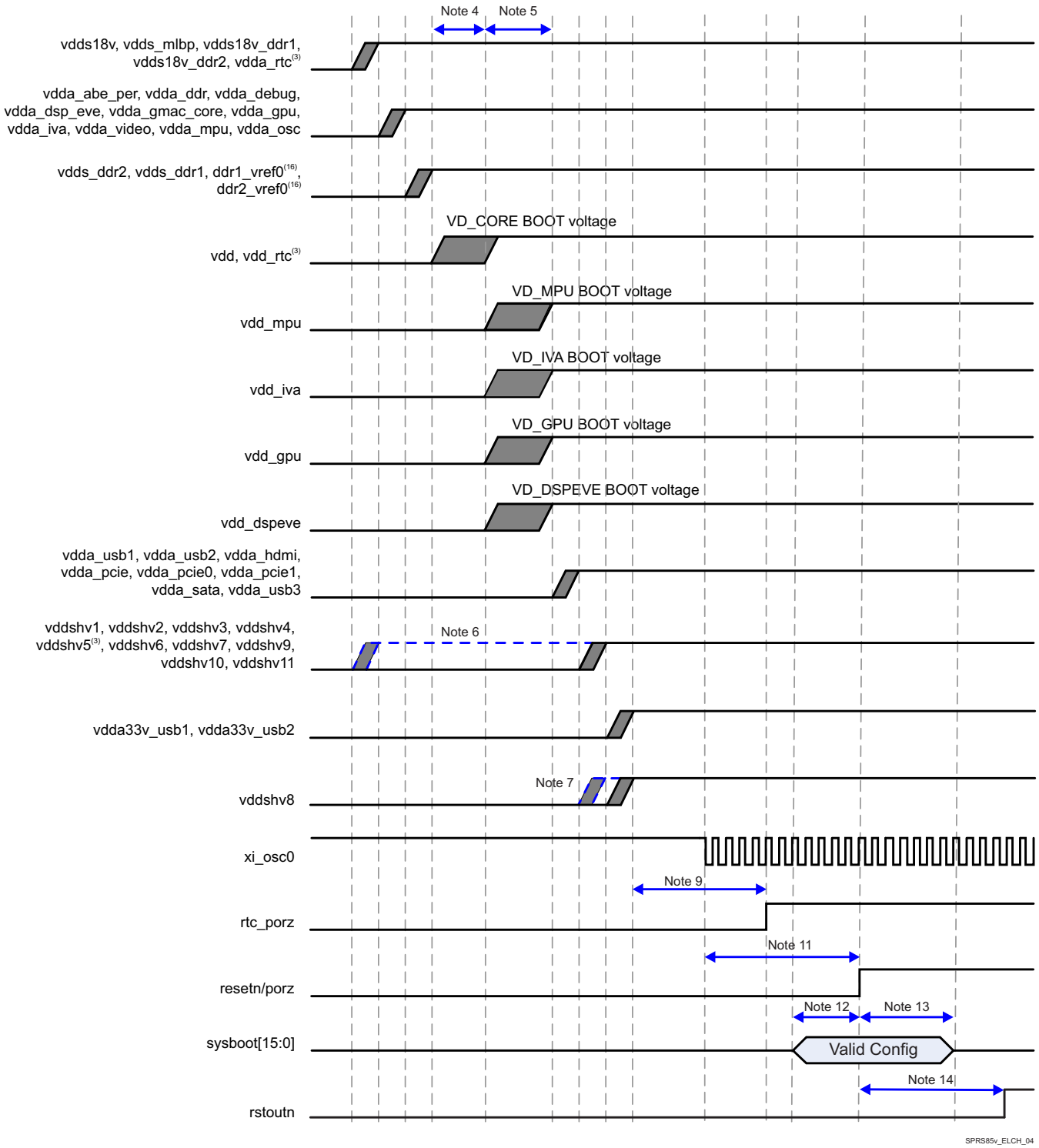

図 5-2. Power-Up Sequencing

(1) Grey shaded areas are windows where it is valid to ramp the voltage rail.

(2) Blue dashed lines are not valid windows but show alternate ramp possibilities based on the associated note.

(3) If RTC-only mode is not used then the following combinations are approved:
- vdda_rtc can be combined with vdds18v

- vdd_rtc can be combined with vdd
- vddshv5 can be combined with other 1.8V or 3.3V vddshvn rails.

If combinations listed above are not followed then sequencing for these 3 voltage rails should follow the RTC mode timing requirements. When using RTC mode timing:

- vdda_rtc rises coincident with, or before, the 1.8V interface supplies (such as vdds18v).
- vdd_rtc rises coincident with vdd, or it may rise earlier. If rising earlier, it must rise after the 1.8V interface supplies.
- vddshv5 rises coincident with the other vddshvn rails (of the same voltage) or it can rise about the same time as the 1.8V PHY supplies (such as vdd_usb1).

(4) vdd must ramp before or at the same time as vdd_mpu, vdd_gpu, vdd_dspeve and vdd_iva.

(5) vdd_mpu, vdd_gpu, vdd_dspeve, vdd_iva can be ramped at the same time or can be staggered.

(6) If any of the vddshv[1-7,9-11] rails (not including vddshv8) are used as 1.8V only, then these rails can be combined with vdds18v.

(7) vddshv8 is separated out to show support for dual voltage. If single voltage is used then vddshv8 can be combined with other vddshvn rails but vddshv8 must ramp after vdd.

(8) vdds and vdda rails must not be combined together, with the one exception of vdda_rtc when RTC-mode is not supported.

(9) Pulse duration: rtc_porz must remain low 1ms after vdda_rtc, vddshv5, and vdd_rtc are ramped and stable.

(10) The FUNC_32K_CLK source must be stable and at a valid frequency 1ms prior to deasserting rtc_porz high.

(11) porz must remain asserted low until all of the following conditions are met:

- All device supply rails reach stable operational levels.
- xi_osc0 is stable and at a valid frequency.
- Minimum of 12P after both of the above conditions are met, where P = 1 / (SYS_CLK1/610), units in ns.

resetn must be high prior to, or rise simultaneous with, porz but not before its power supply, vddshv3, rising.

(12) Setup time: sysboot[15:0] pins must be valid 2P[(15)] before porz is de-asserted high.

(13) Hold time: sysboot[15:0] pins must be valid 15P[(15)] after porz is de-asserted high.

(14) rstoutn will be asserted low when porz is low, and de-asserted following an internal 2ms delay. rstoutn is only valid after vddshv3 reaches an operational level. If used as a peripheral component reset, it should be AND gated with porz to avoid possible reset glitches during power up.

(15) P = 1/(SYS_CLK1/610) frequency in ns.

(16) ddr1_vref0 / ddr2_vref0 may rise coincident with vdds_ddr1 / vdds_ddr2, respectively or at a later time. However, it must be valid before porz rising.

Copyright © 2015–2019, Texas Instruments Incorporated

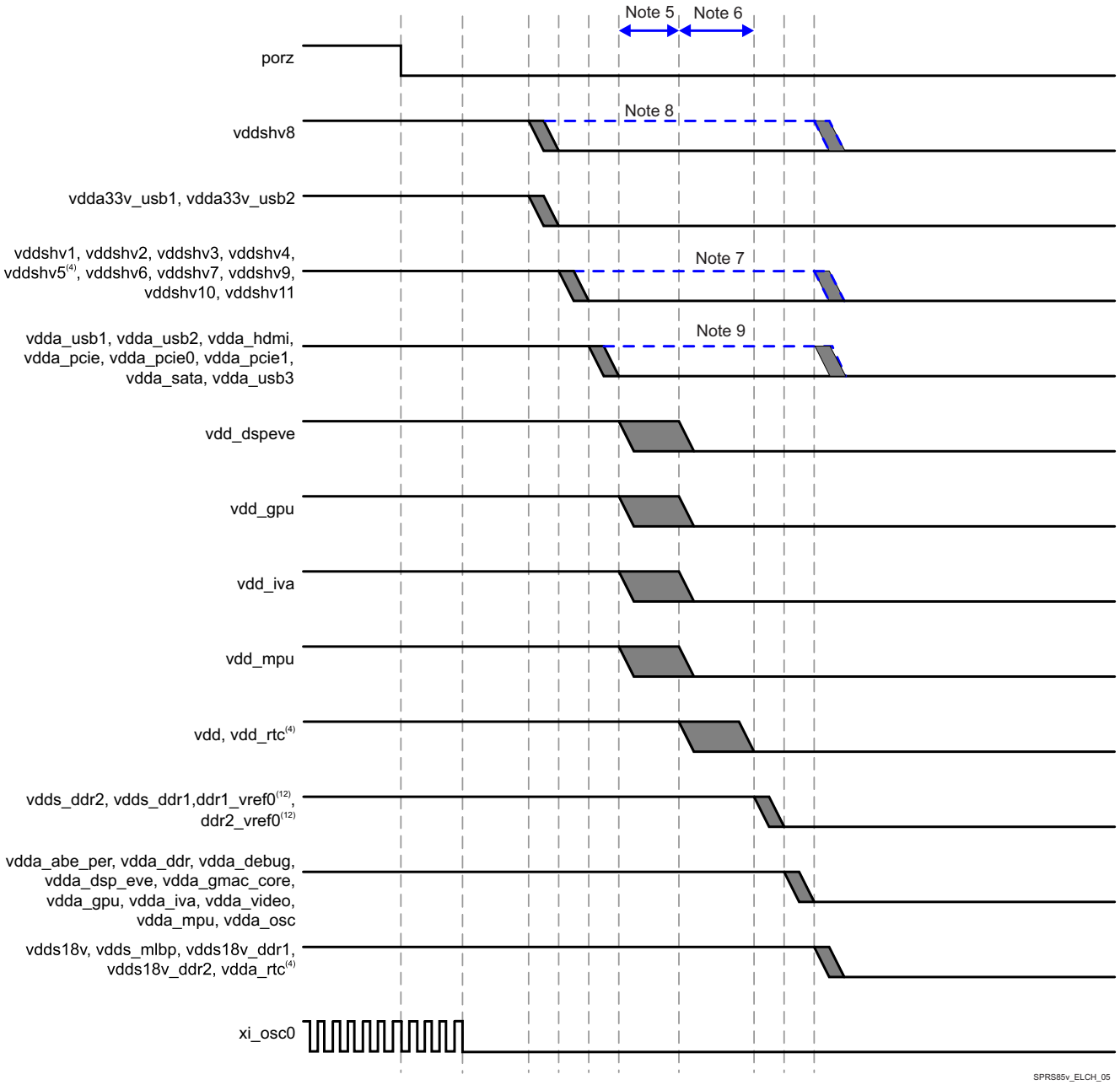

図 5-3. Power-Down Sequencing(10)(11)

(1) Grey shaded areas are windows where it is valid to ramp the voltage rail.

(2) Blue dashed lines are not valid windows but show alternate ramp possibilities based on the associated note.

(3) xi_osc0 can be turned off anytime after porz assertion and must be turned off before vdda_osc voltage rail is shutdown.

(4) If RTC-mode is not used then the following combinations are approved:

- vdda_rtc can be combined with vdds18v
- vdd_rtc can be combined with vdd
- vddshv5 can be combined with other 1.8V or 3.3V vddshv* rails

If combinations listed above are not followed then sequencing for these 3 voltage rails should follow the RTC mode timing requirements. When using RTC mode timing:

- vdda_rtc falls coincident with, or later than, the 1.8V interface supplies (such as vdds18v).
- vdd_rtc falls coincident with vdd, or it may fall later. If falling later, it must fall before, or coincident with, the 1.8V interface supplies.
- vddshv5 falls coincident with the other vddshvn rails (of the same voltage) or it can fall about the same time as the 1.8V PHY supplies (such as vdd_usb1).

(5) vdd_mpu, vdd_gpu, vdd_dspeve, vdd_iva can be ramped at the same time or can be staggered.

(6) vdd must ramp after or at the same time as vdd_mpu, vdd_gpu, vdd_dspeve and vdd_iva.

(7) If any of the vddshv[1-7,9-11] rails (not including vddshv8) are used as 1.8V only, then these rails can be combined with vdds18v. vddshv[1-7,9-11] is allowed to ramp down at either of the two points shown in the timing diagram in either 1.8V mode or in 3.3V mode. If vddshv[1-7,9-11] ramps down at the later time in the diagram then the board design must ensure that the vddshv[1-7,9-11] rail is never higher than 2.0 V above the vdds18v rail.

(8) vddshv8 is separated out to show support for dual voltage. If a dedicated LDO/supply source is used for vddshv8, then vddshv8 ramp down should occur at one of the two earliest points in the timing diagram. If vddshv8 is powered by the same supply source as the other vddshv[1-7,9-11] rails, then it is allowed to ramp down at either of the last two points in the timing diagram.

(9) The 1.8V vdda_* supplies can either ramp down at the earlier time period shown or can be delayed to ramp down after the core supplies coincident with the vdds18v supply as long as porz is asserted (low) during the power down sequence.

(10) The power down sequence shown is the most general case and is always valid. An accelerated power down sequence is also available but is only valid when porz is asserted (low). This accelerated power down sequence has been implemented in the companion PMIC that is recommended for use with this SOC. The accelerated sequence has porz go low first, then all 3.3V supplies simultaneously second, core supplies, DDR supplies and DDR references simultaneously third and all 1.8V supplies simultaneously last.

(11) Ramped Down is defined as reaching a voltage level of no more than 0.6V.

(12) ddr1_vref0 / ddr2_vref0 may fall coincident with vdds_ddr1 / vdds_ddr2, respectively or at a prior time but after porz is asserted low.

図 5-4 describes vddshv[1-7,9-11] Supplies Falling Before vdds18v Supplies Delta.

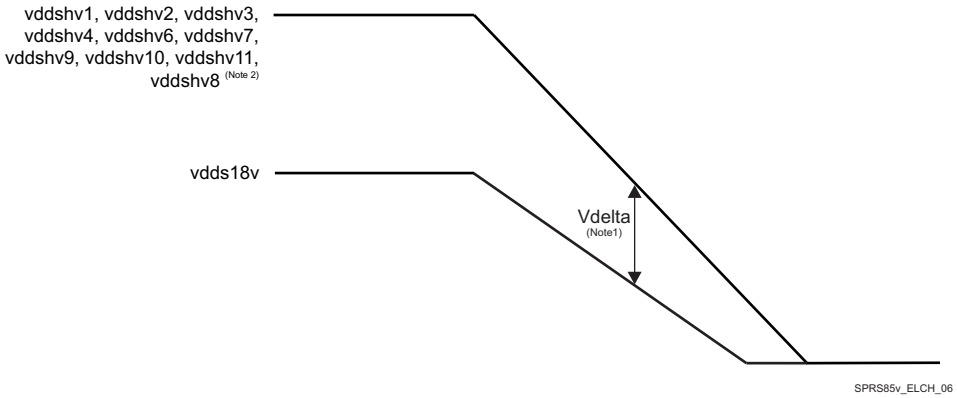

図 5-4. vddshv* Supplies Falling After vdds18v Supplies Delta

(1) Vdelta MAX = 2V

(2) If vddshv8 is powered by the same supply source as the other vddshv[1-7,9-11] rails.

Copyright © 2015–2019, Texas Instruments Incorporated

6 Clock Specifications

注: For more information, see Power, Reset, and Clock Management / PRCM Subsystem Environment / External Clock Signals and External Reset Signals, and Clock Management Functional Description sections of the Device TRM.

注: Audio Back End (ABE) module is not supported for this family of devices, but “ABE” name is still present in some clock or DPLL names.

The device operation requires the following clocks:

- The 32 kHz frequency is used for low frequency operation. It supplies the wake-up domain for operation in lowest power mode. This is an optional clock and will be supplied by on chip divider + mux (FUNC_32K_CLK) incase it is not available on external pin.
- The system clocks, SYS_CLK1(Mandatory) and SYS_CLK2(Optional) are the main clock sources of the device. They supply the reference clock to the DPLLs as well as functional clock to several modules.

The Device also embeds an internal free-running 32-kHz oscillator that is always active as long as the the wake-up (WKUP) domain is supplied.

図 6-1 shows the external input clock sources and the output clocks to peripherals.

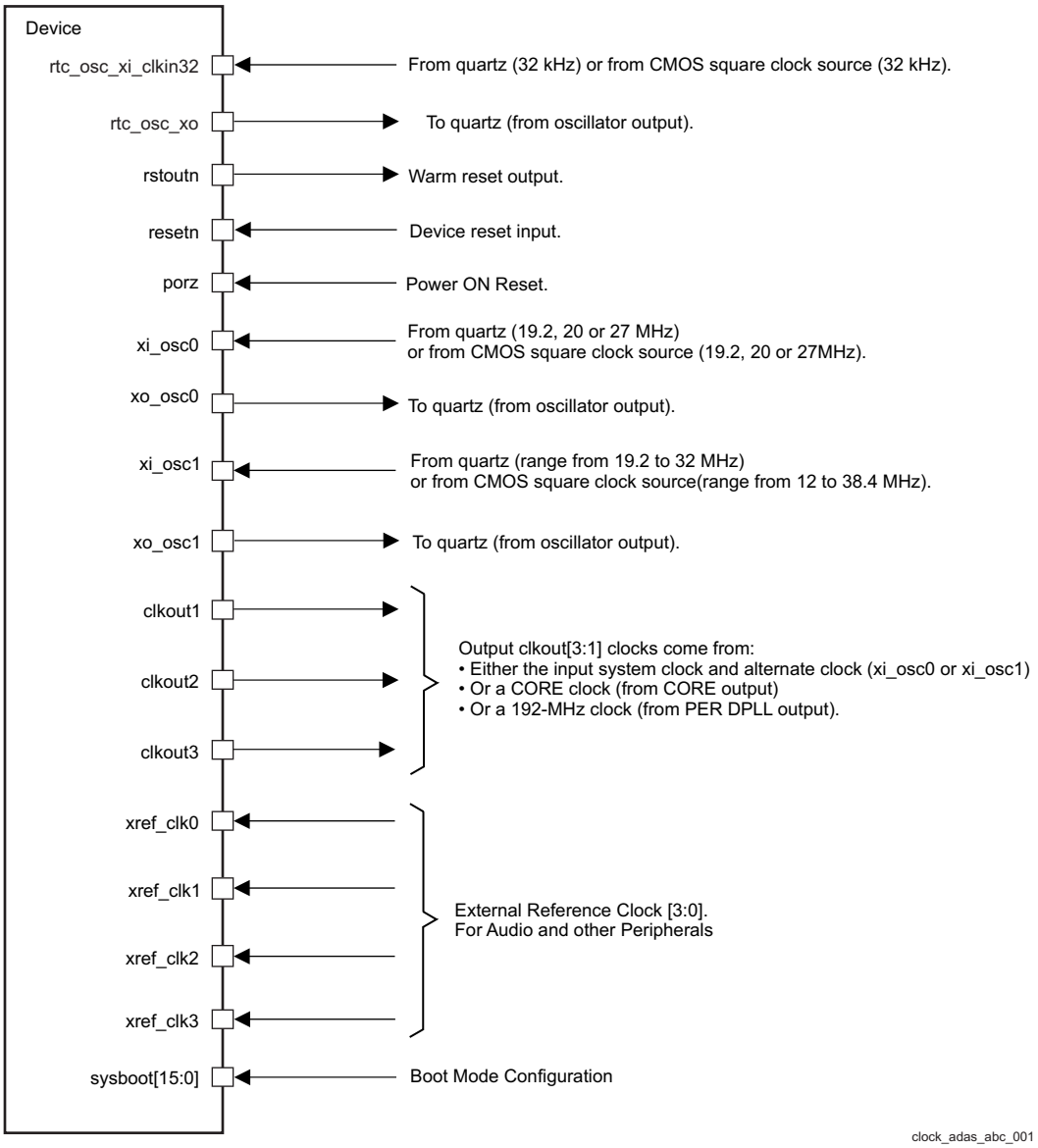

図 6-1. Clock Interface

6.1 Input Clock Specifications

6.1.1 Input Clock Requirements

- The source of the internal system clock (SYS_CLK1) could be either:
  - A CMOS clock that enters on the xi_osc0 ball (with xo_osc0 left unconnected on the CMOS clock case).
  - A crystal oscillator clock managed by xi_osc0 and xo_osc0.
- The source of the internal system clock (SYS_CLK2) could be either:
  - A CMOS clock that enters on the xi_osc1 ball (with xo_osc1 left unconnected on the CMOS clock case).
  - A crystal oscillator clock managed by xi_osc1 and xo_osc1.
- The source of the internal system clock (FUNC_32K_CLK) could be either:
  - A CMOS clock that enters on the rtc_osc_xi_clkin32 ball and supports external LVCMOS clock generators
  - A crystal oscillator clock managed by rtc_osc_xi_clkin32 and rtc_osc_xo.

Copyright © 2015–2019, Texas Instruments Incorporated

6.1.2 System Oscillator OSC0 Input Clock

SYS_CLK1 is received directly from oscillator OSC0. For more information about SYS_CLK1 see Device TRM, Chapter: *Power, Reset, and Clock Management.*

6.1.2.1 OSC0 External Crystal

An external crystal is connected to the device pins. 図 6-2 describes the crystal implementation.

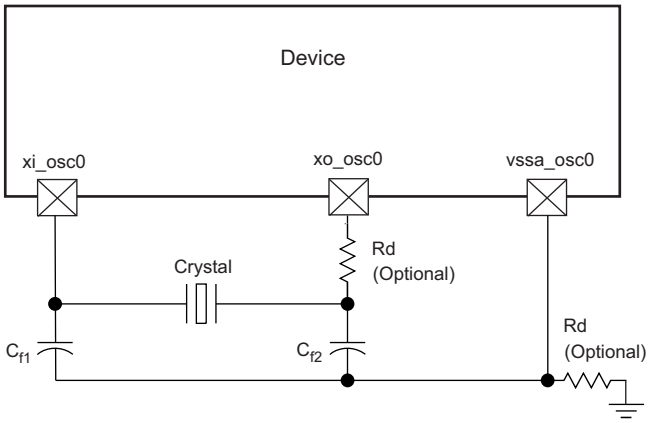

図 6-2. Crystal Implementation

注: The load capacitors, C_{f1} and C_{f2} in 図 6-2, should be chosen such that the below equation is satisfied. C_L in the equation is the load specified by the crystal manufacturer. All discrete components used to implement the oscillator circuit should be placed as close as possible to the associated oscillator xi_osc0, xo_osc0, and vssa_osc0 pins.

$$C_L = \frac{C_{f1} C_{f2}}{(C_{f1} + C_{f2})}$$

図 6-3. Load Capacitance Equation

The crystal must be in the fundamental mode of operation and parallel resonant. 表 6-1 summarizes the required electrical constraints.

表 6-1. OSC0 Crystal Electrical Characteristics

NAME	DESCRIPTION	MIN	TYP	MAX	UNIT
f_p	Parallel resonance crystal frequency			19.2, 20, 27	MHz
C_{f1}	C_{f1} load capacitance for crystal parallel resonance with $C_{f1} = C_{f2}$	12		24	pF
C_{f2}	C_{f2} load capacitance for crystal parallel resonance with $C_{f1} = C_{f2}$	12		24	pF
ESR(C_{f1},C_{f2})	Crystal ESR			100	Ω

表 6-1. OSC0 Crystal Electrical Characteristics (continued)

NAME	DESCRIPTION			MIN	TYP	MAX	UNIT
C_O	Crystal shunt capacitance	ESR = 30 Ω ESR = 40 Ω	19.2 MHz, 20 MHz, 27 MHz			7	pF
		ESR = 50 Ω	19.2 MHz, 20 MHz			7	pF
			27 MHz			5	pF
		ESR = 60 Ω	19.2 MHz, 20 MHz			7	pF
			27 MHz		Not Supported		-
		ESR = 80 Ω	19.2 MHz, 20 MHz			5	pF
			27 MHz		Not Supported		-
		ESR = 100 Ω	19.2 MHz, 20 MHz			3	pF
			27 MHz		Not Supported		-
L_M	Crystal motional inductance for f_p = 20 MHz				10.16		mH
C_M	Crystal motional capacitance				3.42		fF
$t_{j(xiosc0)}$	Frequency accuracy (1), xi_osc0		Ethernet not used			±200	ppm
			Ethernet RGMII and RMII using derived clock			±50	
			Ethernet MII using derived clock			±100	

(1) Crystal characteristics should account for tolerance+stability+aging.

When selecting a crystal, the system design must take into account the temperature and aging characteristics of a crystal versus the user environment and expected lifetime of the system.

表 6-2 details the switching characteristics of the oscillator and the requirements of the input clock.

表 6-2. Oscillator Switching Characteristics—Crystal Mode

NAME	DESCRIPTION	MIN	TYP	MAX	UNIT
f_p	Oscillation frequency			19.2, 20, 27	MHz
t_{sX}	Start-up time			4	ms

6.1.2.2 OSC0 Input Clock

A 1.8-V LVCMOS-Compatible Clock Input can be used instead of the internal oscillator to provide the SYS_CLK1 clock input to the system. The external connections to support this are shown in 図 6-4. The xi_osc0 pin is connected to the 1.8-V LVCMOS-Compatible clock source. The xi_osc0 pin is left unconnected. The vssa_osc0 pin is connected to board ground (VSS).

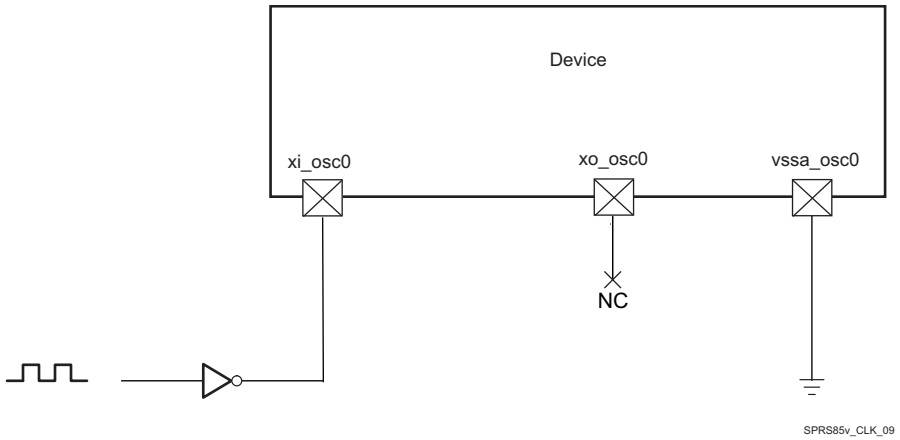

図 6-4. 1.8-V LVCMOS-Compatible Clock Input

Copyright © 2015–2019, Texas Instruments Incorporated

表 6-3 summarizes the OSC0 input clock electrical characteristics.

表 6-3. OSC0 Input Clock Electrical Characteristics—Bypass Mode

NAME	DESCRIPTION	MIN	TYP	MAX	UNIT
f	Frequency			19.2, 20, or 27	MHz
C_{In}	Input capacitance	2.184	2.384	2.584	pF
I_{In}	Input current (3.3V mode)	4	6	10	µA

表 6-4 details the OSC0 input clock timing requirements.

表 6-4. OSC0 Input Clock Timing Requirements

NAME	DESCRIPTION			MIN	TYP	MAX	UNIT
CK0	$1 / t_{c(xiosc0)}$	Frequency, xi_osc0				19.2, 20, 27	MHz
CK1	$t_{w(xiosc0)}$	Pulse duration, xi_osc0 low or high		0.45 * $t_{c(xiosc0)}$		0.55 * $t_{c(xiosc0)}$	ns
	$t_{j(xiosc0)}$	Period jitter(1), xi_osc0				0.01 × $t_{c(xiosc0)}$	ns
	$t_{R(xiosc0)}$	Rise time, xi_osc0				5	ns
	$t_{F(xiosc0)}$	Fall time, xi_osc0				5	ns
	$t_{j(xiosc0)}$	Frequency accuracy(2), xi_osc0	Ethernet not used			±200	ppm
			Ethernet RGMII and RMII using derived clock			±50	
			Ethernet MII using derived clock			±100	

(1) Period jitter is meant here as follows:

– The maximum value is the difference between the longest measured clock period and the expected clock period

– The minimum value is the difference between the shortest measured clock period and the expected clock period

(2) Crystal characteristics should account for tolerance+stability+aging.

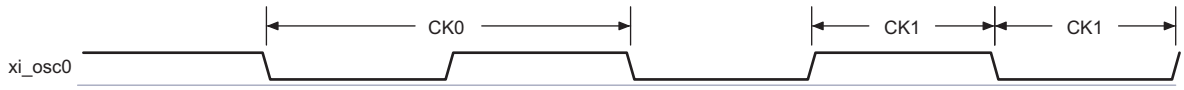

図 6-5. xi_osc0 Input Clock

6.1.3 Auxiliary Oscillator OSC1 Input Clock

SYS_CLK2 is received directly from oscillator OSC1. For more information about SYS_CLK2 see Device TRM, Chapter: *Power, Reset, and Clock Management.*

6.1.3.1 OSC1 External Crystal

An external crystal is connected to the device pins. 図 6-6 describes the crystal implementation.

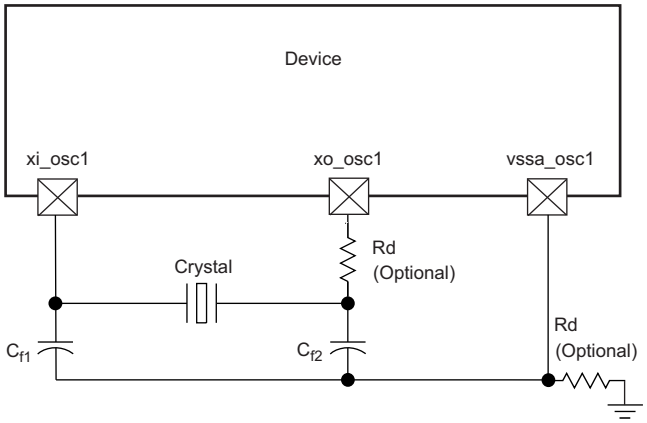

図 6-6. Crystal Implementation

注: The load capacitors, C_{f1} and C_{f2} in 図 6-6, should be chosen such that the below equation is satisfied. C_L in the equation is the load specified by the crystal manufacturer. All discrete components used to implement the oscillator circuit should be placed as close as possible to the associated oscillator xi_osc1, xo_osc1, and vssa_osc1 pins.

$$C_L = \frac{C_{f1} C_{f2}}{(C_{f1} + C_{f2})}$$

図 6-7. Load Capacitance Equation

The crystal must be in the fundamental mode of operation and parallel resonant. 表 6-5 summarizes the required electrical constraints.

表 6-5. OSC1 Crystal Electrical Characteristics

NAME	DESCRIPTION			MIN	TYP	MAX	UNIT
f_p	Parallel resonance crystal frequency				Range from 19.2 to 32		MHz
C_{f1}	C_{f1} load capacitance for crystal parallel resonance with $C_{f1} = C_{f2}$			12		24	pF
C_{f2}	C_{f2} load capacitance for crystal parallel resonance with $C_{f1} = C_{f2}$			12		24	pF
ESR(C_{f1},C_{f2})	Crystal ESR					100	Ω
C_O	Crystal shunt capacitance	ESR = 30 Ω	19.2 MHz ≤ f_p ≤ 32 MHz			7	pF
		ESR = 40 Ω	19.2 MHz ≤ f_p ≤ 32 MHz			5	pF
		ESR = 50 Ω	19.2 MHz ≤ f_p ≤ 25 MHz			7	pF
			25 MHz < f_p ≤ 27 MHz			5	pF
			27 MHz < f_p ≤ 32 MHz			Not Supported	-
		ESR = 60 Ω	19.2 MHz ≤ f_p ≤ 23 MHz			7	pF
			23 MHz < f_p ≤ 25 MHz			5	pF
			25 MHz < f_p ≤ 32 MHz			Not Supported	-
		ESR = 80 Ω	19.2 MHz ≤ f_p ≤ 23 MHz			5	pF
			23 MHz ≤ f_p ≤ 25 MHz			3	pF
			25 MHz < f_p ≤ 32 MHz			Not Supported	-
		ESR = 100 Ω	19.2 MHz ≤ f_p ≤ 20 MHz			3	pF
			20 MHz < f_p ≤ 32 MHz			Not Supported	-
L_M	Crystal motional inductance for f_p = 20 MHz				10.16		mH
C_M	Crystal motional capacitance				3.42		fF

Copyright © 2015–2019, Texas Instruments Incorporated

表 6-5. OSC1 Crystal Electrical Characteristics (continued)

NAME	DESCRIPTION		MIN	TYP	MAX	UNIT
$t_{j(xiosc1)}$	Frequency accuracy[(1)], xi_osc1	Ethernet not used			±200	ppm
		Ethernet RGMII and RMII using derived clock			±50	
		Ethernet MII using derived clock			±100	

(1) Crystal characteristics should account for tolerance+stability+aging.

When selecting a crystal, the system design must take into account the temperature and aging characteristics of a crystal versus the user environment and expected lifetime of the system.

表 6-6 details the switching characteristics of the oscillator and the requirements of the input clock.

表 6-6. Oscillator Switching Characteristics—Crystal Mode

NAME	DESCRIPTION	MIN	TYP	MAX	UNIT
f_p	Oscillation frequency		Range from 19.2 to 32		MHz
t_{sX}	Start-up time			4	ms

6.1.3.2 OSC1 Input Clock

A 1.8-V LVCMOS-Compatible Clock Input can be used instead of the internal oscillator to provide the SYS_CLK2 clock input to the system. The external connections to support this are shown in, 図 6-8. The xi_osc1 pin is connected to the 1.8-V LVCMOS-Compatible clock sources. The xo_osc1 pin is left unconnected. The vssa_osc1 pin is connected to board ground (vss).

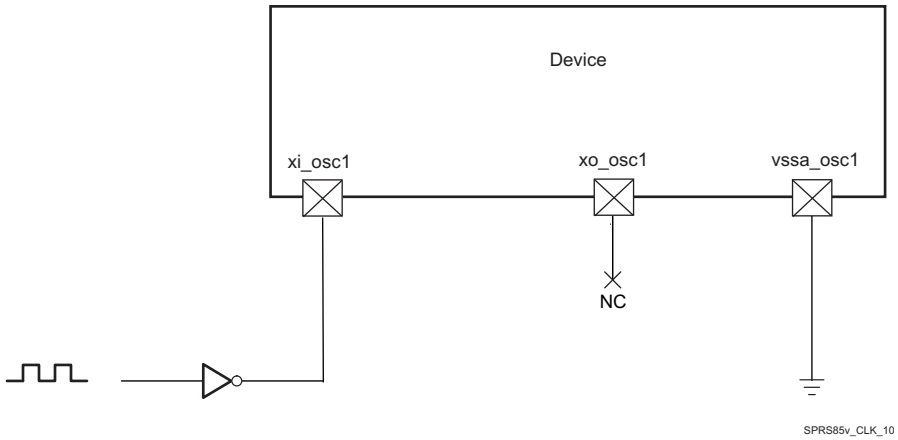

図 6-8. 1.8-V LVCMOS-Compatible Clock Input

表 6-7 summarizes the OSC1 input clock electrical characteristics.

表 6-7. OSC1 Input Clock Electrical Characteristics—Bypass Mode

NAME	DESCRIPTION	MIN	TYP	MAX	UNIT
f	Frequency		Range from 12 to 38.4		MHz
C_I	Input capacitance	2.819	3.019	3.219	pF
I_I	Input current (3.3V mode)	4	6	10	µA
t_{sX}	Start-up time[(1)]			See[(2)]	ms

(1) To switch from bypass mode to crystal or from crystal mode to bypass mode, there is a waiting time about 100 µs; however, if the chip comes from bypass mode to crystal mode the crystal will start-up after time mentioned in 表 6-6, t_{sX} parameter.

(2) Before the processor boots up and the oscillator is set to bypass mode, there is a waiting time when the internal oscillator is in application mode and receives a wave. The switching time in this case is about 100 µs.

表 6-8 details the OSC1 input clock timing requirements.

表 6-8. OSC1 Input Clock Timing Requirements

NAME		DESCRIPTION		MIN	TYP	MAX	UNIT
CK0	$1 / t_{c(xiosc1)}$	Frequency, xi_osc1			Range from 12 to 38.4		MHz
CK1	$t_{w(xiosc1)}$	Pulse duration, xi_osc1 low or high		$0.45 * t_{c(xiosc1)}$		$0.55 * t_{c(xiosc1)}$	ns
	$t_{j(xiosc1)}$	Period jitter(1), xi_osc1				$0.01 \times t_{c(xiosc1)}$ (3)	ns
	$t_{R(xiosc1)}$	Rise time, xi_osc1				5	ns
	$t_{F(xiosc1)}$	Fall time, xi_osc1				5	ns
	$t_{j(xiosc1)}$	Frequency accuracy(2), xi_osc1	Ethernet not used			±200	ppm
			Ethernet RGMII and RMII using derived clock			±50	
			Ethernet MII using derived clock			±100	

(1) Period jitter is meant here as follows:
- The maximum value is the difference between the longest measured clock period and the expected clock period
- The minimum value is the difference between the shortest measured clock period and the expected clock period

(2) Crystal characteristics should account for tolerance+stability+aging.

(3) The Period jitter requirement for osc1 can be relaxed to $0.02*t_{c(xiosc1)}$ under the following constraints:
a.The osc1/SYS_CLK2 clock bypasses all device PLLs
b.The osc1/SYS_CLK2 clock is only used to source the DSS pixel clock outputs

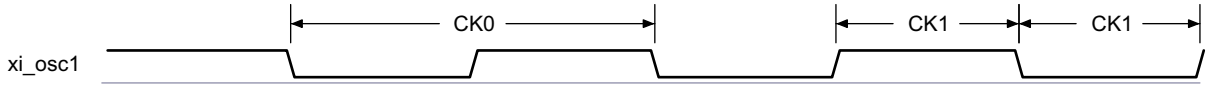

図 6-9. xi_osc1 Input Clock

6.1.4 RTC Oscillator Input Clock

FUNC_32K_CLK is received directly from RTC Oscillator. For more information about FUNC_32K_CLK see Device TRM, Chapter: *Power, Reset, and Clock Management.*

注: RTC only mode is not supported feature.

6.1.4.1 RTC Oscillator External Crystal

An external crystal is connected to the device pins. 図 6-10 describes the crystal implementation.

Copyright © 2015–2019, Texas Instruments Incorporated

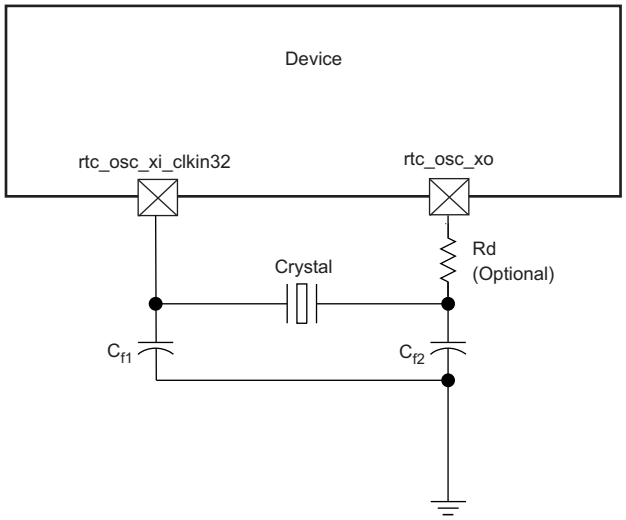

図 6-10. Crystal Implementation

注: The load capacitors, C_{f1} and C_{f2} in 図 6-10, should be chosen such that the below equation is satisfied. C_L in the equation is the load specified by the crystal manufacturer. All discrete components used to implement the oscillator circuit should be placed as close as possible to the associated oscillator rtc_osc_xi_clkin32 and rtc_osc_xo pins.

$$C_L = \frac{C_{f1} C_{f2}}{(C_{f1} + C_{f2})}$$

図 6-11. Load Capacitance Equation

The crystal must be in the fundamental mode of operation and parallel resonant. 表 6-9 summarizes the required electrical constraints.

表 6-9. RTC Crystal Electrical Characteristics

NAME	DESCRIPTION	MIN	TYP	MAX	UNIT
f_p	Parallel resonance crystal frequency			32.768	kHz
C_{f1}	C_{f1} load capacitance for crystal parallel resonance with $C_{f1} = C_{f2}$	12		24	pF
C_{f2}	C_{f2} load capacitance for crystal parallel resonance with $C_{f1} = C_{f2}$	12		24	pF
ESR(C_{f1},C_{f2})	Crystal ESR			80	kΩ
C_O	Crystal shunt capacitance			5	pF
L_M	Crystal motional inductance for f_p = 32.768 kHz		10.7		mH
C_M	Crystal motional capacitance		2.2		fF
$t_{j(rtc_osc_xi_clkin32)}$	Frequency accuracy, rtc_osc_xi_clkin32			±200	ppm

When selecting a crystal, the system design must take into account the temperature and aging characteristics of a crystal versus the user environment and expected lifetime of the system.

表 6-10 details the switching characteristics of the oscillator and the requirements of the input clock.

表 6-10. Oscillator Switching Characteristics—Crystal Mode

NAME	DESCRIPTION	MIN	TYP	MAX	UNIT
f_p	Oscillation frequency			32.768	kHz
t_{sX}	Start-up time			4	ms

6.1.4.2 RTC Oscillator Input Clock

A 1.8-V LVCMOS-Compatible Clock Input can be used instead of the internal oscillator to provide the FUNC_32K_CLK clock input to the system. The external connections to support this are shown in 図 6-12. The rtc_osc_xi_clkin32 pin is connected to the 1.8-V LVCMOS-Compatible clock sources. The rtc_osc_xo pin is left unconnected.

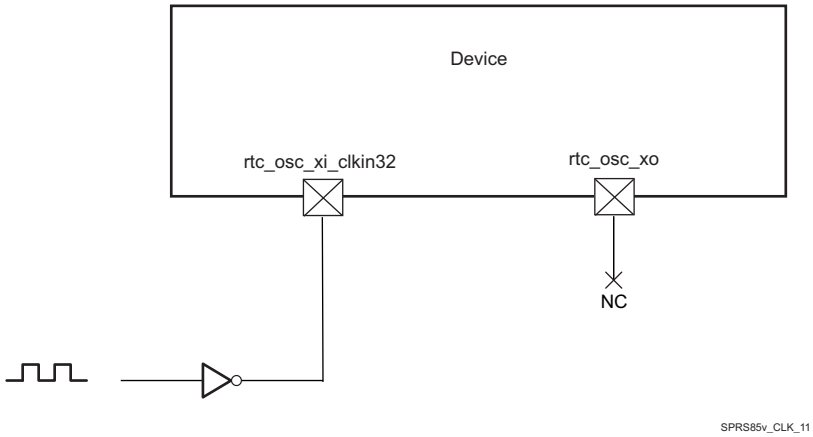

図 6-12. LVCMOS-Compatible Clock Input

表 6-11 summarizes the RTC Oscillator input clock electrical characteristics.

表 6-11. RTC Oscillator Input Clock Electrical Characteristics—Bypass Mode

NAME		DESCRIPTION	MIN	TYP	MAX	UNIT
CK0	$1/t_{c(rtc_osc_xi_clkin32)}$	Frequency, rtc_osc_xi_clkin32			32.768	kHz
CK1	$t_{w(rtc_osc_xi_clkin32)}$	Pulse duration, rtc_osc_xi_clkin32 low or high	0.45 * $t_{c(rtc_osc_xi_clkin32)}$		0.55 * $t_{c(rtc_osc_xi_clkin32)}$	ns
	C_{IN}	Input capacitance	2.178	2.378	2.578	pF
	I_{IN}	Input current (3.3V mode)	4	6	10	µA
	t_{sX}	Start-up time			See (1)	ms

(1) Before the processor boots up and the oscillator is set to bypass mode, there is a waiting time when the internal oscillator is inapplication mode and receives a wave. The switching time in this case is about 100 µs.

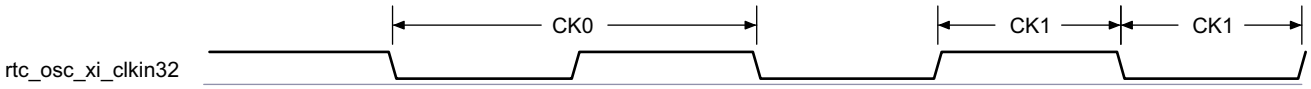

図 6-13. rtc_osc_xi_clkin32 Input Clock

6.2 RC On-die Oscillator Clock

注: The OSC_32K_CLK clock, provided by the On-die 32K RC oscillator, inside of the SoC, is not accurate 32kHz clock.

The frequency may significantly vary with temperature and silicon characteristics.

For more information about OSC_32K_CLK see the Device TRM, Chapter: *Power, Reset, and Clock Management*.

6.3 DPLLs, DLLs Specifications

Copyright © 2015–2019, Texas Instruments Incorporated

注: For more information, see:

- Power, Reset, and Clock Management / Clock Management Functional / Internal Clock Sources and Generators / Generic DPLL Overview section

  and
- Display Subsystem / Display Subsystem Overview section of the Device TRM.

To generate high-frequency clocks, the device supports multiple on-chip DPLLs controlled directly by the PRCM module. They are of two types: type A and type B DPLLs.

- They have their own independent power domain (each one embeds its own switch and can be controlled as an independent functional power domain)
- They are fed with ALWAYS ON system clock, with independent control per DPLL.

The different DPLLs managed by the PRCM are listed below:

- DPLL_MPU: It supplies the MPU subsystem clocking internally.
- DPLL_IVA: It feeds the IVA subsystem clocking.
- DPLL_CORE: It supplies all interface clocks and also few module functional clocks.
- DPLL_PER: It supplies several clock sources: a 192-MHz clock for the display functional clock, a 96-MHz functional clock to subsystems and peripherals.
- DPLL_ABE: It provides clocks to various modules within the device.
- DPLL_USB: It provides 960M clock for USB modules (USB1/2/3/4).
- DPLL_GMAC: It supplies several clocks for the Gigabit Ethernet Switch (GMAC_SW).
- DPLL_DSP: It feeds the DSP Subsystem clocking.
- DPLL_GPU: It supplies clock for the GPU Subsystem.
- DPLL_DDR: It generates clocks for the two External Memory Interface (EMIF) controllers and their associated EMIF PHYs.
- DPLL_PCIE_REF: It provides reference clock for the APLL_PCIE in PCIE Subsystem.
- APLL_PCIE: It feeds clocks for the device Peripheral Component Interconnect Express (PCIe) controllers.

注: The following DPLLs are controlled by the clock manager located in the always-on Core power domain (CM_CORE_AON):

- DPLL_MPU, DPLL_IVA, DPLL_CORE, DPLL_ABE, DPLL_DDR, DPLL_GMAC, DPLL_PCIE_REF, DPLL_PER, DPLL_USB, DPLL_DSP, DPLL_GPU, APLL_PCIE_REF.

For more information on CM_CORE_AON and CM_CORE or PRCM DPLLs, see the Power, Reset, and Clock Management chapter of the Device TRM.

The following DPLLs are not managed by the PRCM:

- DPLL_VIDEO1; (It is controlled from DSS)
- DPLL_VIDEO2; (It is controlled from DSS)
- DPLL_HDMI; (It is controlled from DSS)
- DPLL_SATA; (It is controlled from SATA)
- DPLL_DEBUG; (It is controlled from DEBUGSS)
- DPLL_USB_OTG_SS; (It is controlled from OCP2SCP1)

注: For more information for not controlled from PRCM DPLL's see the related chapters in TRM.

6.3.1 DPLL Characteristics

The DPLL has three relevant input clocks. One of them is the reference clock (CLKINP) used to generated the synthesized clock but can also be used as the bypass clock whenever the DPLL enters a bypass mode. It is therefore mandatory. The second one is a fast bypass clock (CLKINPULOW) used when selected as the bypass clock and is optional. The third clock (CLKINPHIF) is explained in the next paragraph.

The DPLL has three output clocks (namely CLKOUT, CLKOUTX2, and CLKOUTHIF). CLKOUT and CLKOUTX2 run at the bypass frequency whenever the DPLL enters a bypass mode. Both of them are generated from the lock frequency divided by a post-divider (namely M2 post-divider). The third clock, CLKOUTHIF, has no automatic bypass capability. It is an output of a post-divider (M3 post-divider) with the input clock selectable between the internal lock clock (Fdpll) and CLKINPHIF input of the PLL through an asynchronous multplexing.

For more information, see the Power, Reset, and Clock Management chapter of the Device TRM.

表 6-12 summarizes DPLL type described in 6.3, *DPLLs, DLLs Specifications* introduction.

表 6-12. DPLL Control Type

DPLL NAME	TYPE	CONTROLLED BY PRCM
DPLL_ABE	表 6-13 (Type A)	Yes(1)
DPLL_CORE	表 6-13 (Type A)	Yes(1)
DPLL_DEBUGSS	表 6-13 (Type A)	No(2)
DPLL_DSP	表 6-13 (Type A)	Yes(1)
DPLL_GMAC	表 6-13 (Type A)	Yes(1)
DPLL_HDMI	表 6-14 (Type B)	No(2)
DPLL_IVA	表 6-13 (Type A)	Yes(1)
DPLL_MPU	表 6-13 (Type A)	Yes(1)
DPLL_PER	表 6-13 (Type A)	Yes(1)
APLL_PCIE	表 6-13 (Type A)	Yes(1)
DPLL_PCIE_REF	表 6-14 (Type B)	Yes(1)
DPLL_SATA	表 6-14 (Type B)	No(2)
DPLL_USB	表 6-14 (Type B)	Yes(1)
DPLL_USB_OTG_SS	表 6-14 (Type B)	No(2)
DPLL_VIDEO1	表 6-13 (Type A)	No(2)
DPLL_VIDEO2	表 6-13 (Type A)	No(2)
DPLL_DDR	表 6-13 (Type A)	Yes(1)
DPLL_GPU	表 6-13 (Type A)	Yes(1)

(1) DPLL is in the always-on domain.
(2) DPLL is not controlled by the PRCM.

表 6-13 and 表 6-14 summarize the DPLL characteristics and assume testing over recommended operating conditions.

表 6-13. DPLL Type A Characteristics

NAME	DESCRIPTION	MIN	TYP	MAX	UNIT	COMMENTS
f_{input}	CLKINP input frequency	0.032		52	MHz	F_{INP}
$f_{internal}$	Internal reference frequency	0.15		52	MHz	REFCLK
$f_{CLKINPHIF}$	CLKINPHIF input frequency	10		1400	MHz	F_{INPHIF}
$f_{CLKINPULOW}$	CLKINPULOW input frequency	0.001		600	MHz	Bypass mode: f_{CLKOUT} = $f_{CLKINPULOW}$ / (M1 + 1) if ulowclken = 1(6)

Copyright © 2015–2019, Texas Instruments Incorporated

表 6-13. DPLL Type A Characteristics (continued)

NAME	DESCRIPTION	MIN	TYP	MAX	UNIT	COMMENTS
f_{CLKOUT}	CLKOUT output frequency	20[1]		1800[2]	MHz	[M / (N + 1)] × F_{INP} × [1 / M2] (in locked condition)
$f_{CLKOUTx2}$	CLKOUTx2 output frequency	40[1]		2200[2]	MHz	2 × [M / (N + 1)] × F_{INP} × [1 / M2] (in locked condition)
$f_{CLKOUTHIF}$	CLKOUTHIF output frequency	20[3]		1400[4]	MHz	F_{INPHIF} / M3 if clkinphifsel = 1
		40[3]		2200[4]	MHz	2 × [M / (N + 1)] × F_{INP} × [1 / M3] if clkinphifsel = 0
$f_{CLKDCOLDO}$	DCOCLKLDO output frequency	40		2800	MHz	2 × [M / (N + 1)] × F_{INP} (in locked condition)
t_{lock}	Frequency lock time			6 + 350 × REFCLK	µs	
p_{lock}	Phase lock time			6 + 500 × REFCLK	µs	
$t_{relock-L}$	Relock time—Frequency lock[5] (LP relock time from bypass)			6 + 70 × REFCLK	µs	DPLL in LP relock time: lowcurrstdby = 1
$p_{relock-L}$	Relock time—Phase lock[5] (LP relock time from bypass)			6 + 120 × REFCLK	µs	DPLL in LP relock time: lowcurrstdby = 1
$t_{relock-F}$	Relock time—Frequency lock[5] (fast relock time from bypass)			3.55 + 70 × REFCLK	µs	DPLL in fast relock time: lowcurrstdby = 0
$p_{relock-F}$	Relock time—Phase lock[5] (fast relock time from bypass)			3.55 + 120 × REFCLK	µs	DPLL in fast relock time: lowcurrstdby = 0

(1) The minimum frequencies on CLKOUT and CLKOUTX2 are assuming M2 = 1.

For M2 > 1, the minimum frequency on these clocks will further scale down by factor of M2.

(2) The maximum frequencies on CLKOUT and CLKOUTX2 are assuming M2 = 1.

(3) The minimum frequency on CLKOUTHIF is assuming M3 = 1. For M3 > 1, the minimum frequency on this clock will further scale down by factor of M3.

(4) The maximum frequency on CLKOUTHIF is assuming M3 = 1.

(5) Relock time assumes typical operating conditions, 10°C maximum temperature drift.

(6) Bypass mode: f_{CLKOUT} = F_{INP} if ULOWCLKEN = 0. For more information, see the Device TRM.

表 6-14. DPLL Type B Characteristics

NAME	DESCRIPTION	MIN	TYP	MAX	UNIT	COMMENTS
f_{input}	CLKINP input clock frequency	0.62		60	MHz	F_{INP}
$f_{internal}$	REFCLK internal reference clock frequency	0.62		2.5	MHz	[1 / (N + 1)] × F_{INP}
$f_{CLKINPULOW}$	CLKINPULOW bypass input clock frequency	0.001		600	MHz	Bypass mode: f_{CLKOUT} = $f_{CLKINPULOW}$ / (M1 + 1) If ulowclken = 1[4]
$f_{CLKLDOOUT}$	CLKOUTLDO output clock frequency	20[1][5]		2500[2][5]	MHz	M / (N + 1)] × F_{INP} × [1 / M2] (in locked condition)
f_{CLKOUT}	CLKOUT output clock frequency	20[1][5]		1450[2][5]	MHz	[M / (N + 1)] × F_{INP} × [1 / M2] (in locked condition)
$f_{CLKDCOLDO}$	Internal oscillator (DCO) output clock frequency	750[5]		1500[5]	MHz	[M / (N + 1)] × F_{INP} (in locked condition)
		1250[5]		2500[5]	MHz	
t_J	CLKOUTLDO period jitter	–2.5%		2.5%		The period jitter at the output clocks is ± 2.5% peak to peak
	CLKOUT period jitter					
	CLKDCOLDO period jitter					
t_{lock}	Frequency lock time			350 × REFCLKs	µs	
p_{lock}	Phase lock time			500 × REFCLKs	µs	

表 6-14. DPLL Type B Characteristics (continued)

NAME	DESCRIPTION	MIN	TYP	MAX	UNIT	COMMENTS
$t_{relock-L}$	Relock time—Frequency lock[3] (LP relock time from bypass)			9 + 30 × REFCLKs	µs	
$p_{relock-L}$	Relock time—Phase lock[3] (LP relock time from bypass)			9 + 125 × REFCLKs	µs	

(1) The minimum frequency on CLKOUT is assuming M2 = 1.

For M2 > 1, the minimum frequency on this clock will further scale down by factor of M2.

(2) The maximum frequency on CLKOUT is assuming M2 = 1.

(3) Relock time assumes typical operating conditions, 10°C maximum temperature drift.

(4) Bypass mode: $f_{CLKOUT} = F_{INP}$ if ULOWCLKEN = 0. For more information, see the Device TRM.

(5) For output clocks, there are two frequency ranges according to the SELFREQDCO setting. For more information, see the Device TRM.

6.3.2 DLL Characteristics

表 6-15 summarizes the DLL characteristics and assumes testing over recommended operating conditions.

表 6-15. DLL Characteristics

NAME	DESCRIPTION	MIN	TYP	MAX	UNIT
f_{input}	Input clock frequency (EMIF_DLL_FCLK)			266	MHz
t_{lock}	Lock time			50k	cycles
t_{relock}	Relock time (a change of the DLL frequency implies that DLL must relock)			50k	cycles

Copyright © 2015–2019, Texas Instruments Incorporated

7 Timing Requirements and Switching Characteristics

7.1 Timing Test Conditions

All timing requirements and switching characteristics are valid over the recommended operating conditions unless otherwise specified.

7.2 Interface Clock Specifications

7.2.1 Interface Clock Terminology

The interface clock is used at the system level to sequence the data and/or to control transfers accordingly with the interface protocol.

7.2.2 Interface Clock Frequency

The two interface clock characteristics are:

- The maximum clock frequency
- The maximum operating frequency

The interface clock frequency documented in this document is the maximum clock frequency, which corresponds to the maximum frequency programmable on this output clock. This frequency defines the maximum limit supported by the Device IC and does not take into account any system consideration (PCB, peripherals).

The system designer will have to consider these system considerations and the Device IC timing characteristics as well to define properly the maximum operating frequency that corresponds to the maximum frequency supported to transfer the data on this interface.

7.3 Timing Parameters and Information

The timing parameter symbols used in the timing requirement and switching characteristic tables are created in accordance with JEDEC Standard 100. To shorten the symbols, some of pin names and other related terminologies have been abbreviated as follows:

表 7-1. Timing Parameters

SUBSCRIPTS	
SYMBOL	**PARAMETER**
c	Cycle time (period)
d	Delay time
dis	Disable time
en	Enable time
h	Hold time
su	Setup time
START	Start bit
t	Transition time
v	Valid time
w	Pulse duration (width)
X	Unknown, changing, or don't care level
F	Fall time
H	High
L	Low
R	Rise time
V	Valid
IV	Invalid

表 7-1. Timing Parameters (continued)

SUBSCRIPTS	
SYMBOL	PARAMETER
AE	Active Edge
FE	First Edge
LE	Last Edge
Z	High impedance

7.3.1 Parameter Information

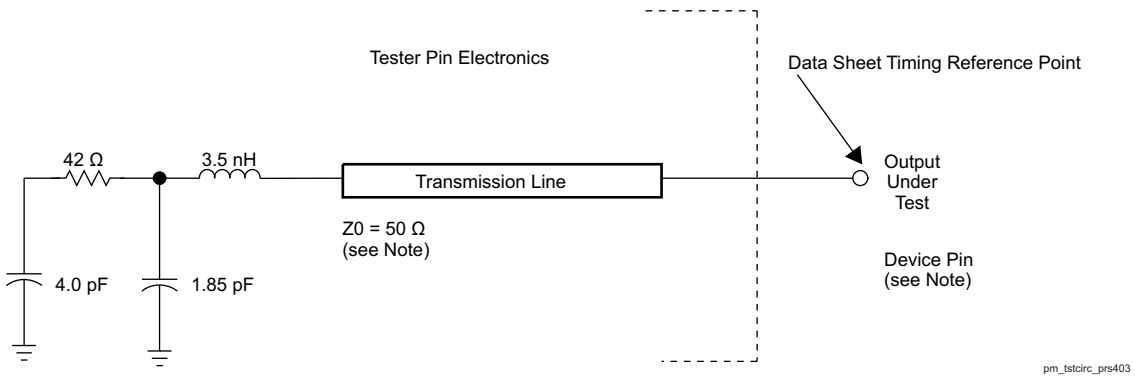

図 7-1. Test Load Circuit for AC Timing Measurements

The load capacitance value stated is only for characterization and measurement of AC timing signals.

This load capacitance value does not indicate the maximum load the device is capable of driving.

7.3.1.1 1.8V and 3.3V Signal Transition Levels

All input and output timing parameters are referenced to V_{ref} for both "0" and "1" logic levels. V_{ref} = (VDD I/O)/2.

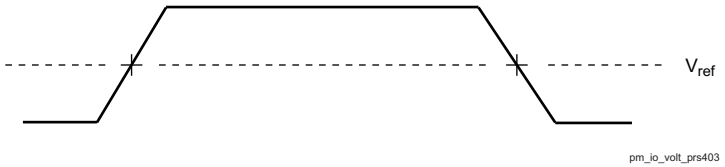

図 7-2. Input and Output Voltage Reference Levels for AC Timing Measurements

All rise and fall transition timing parameters are referenced to V_{IL} MAX and V_{IH} MIN for input clocks, V_{OL} MAX and V_{OH} MIN for output clocks.

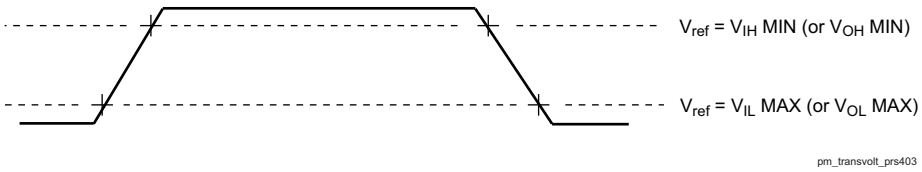

図 7-3. Rise and Fall Transition Time Voltage Reference Levels

7.3.1.2 1.8V and 3.3V Signal Transition Rates

The default SLEWCONTROL settings in each pad configuration register must be used to ensure timings, unless specific instructions otherwise are given in the individual timing sub-sections of the datasheet.

Copyright © 2015–2019, Texas Instruments Incorporated

All timings are tested with an input edge rate of 4 volts per nanosecond (4 V/ns).

7.3.1.3 Timing Parameters and Board Routing Analysis

The timing parameter values specified in this data manual do not include delays by board routes. As a good board design practice, such delays must always be taken into account. Timing values may be adjusted by increasing/decreasing such delays. TI recommends using the available I/O buffer information specification (IBIS) models to analyze the timing characteristics correctly. To properly use IBIS models to attain accurate timing analysis for a given system, see the *Using IBIS Models for timing Analysis* application report (literature number SPRA839). If needed, external logic hardware such as buffers may be used to compensate any timing differences.

7.4 Recommended Clock and Control Signal Transition Behavior

All clocks and control signals must transition between V_{IH} and V_{IL} (or between V_{IL} and V_{IH}) in a monotonic manner. Monotonic transitions are more easily ensured with faster switching signals. Slower input transitions are more susceptible to glitches due to noise and special care should be taken for slow input clocks.

7.5 Virtual and Manual I/O Timing Modes

Some of the timings described in the following sections require the use of Virtual or Manual I/O Timing Modes. 表 7-2 provides a summary of the Virtual and Manual I/O Timing Modes across all device interfaces. The individual interface timing sections found later in this document provide the full description of each applicable Virtual and Manual I/O Timing Mode. Refer to the Pad Configuration section of the device TRM for the procedure on implementing the Virtual and Manual Timing Modes in a system.

表 7-2. Modes Summary

Virtual or Manual IO Mode Name	Data Manual Timing Mode
VIP	
VIP1_MANUAL1	VIN1A/1B/2A Rise-Edge Capture Mode Timings
VIP1_2B_MANUAL1	VIN2B Rise-Edge Capture Mode Timings
VIP1_MANUAL2	VIN1A/1B/2A Fall-Edge Capture Mode Timings
VIP1_2B_MANUAL2	VIN2B Fall-Edge Capture Mode Timings
VIP2_MANUAL1	VIN3A, VIN3B IOSET1 Rise-Edge Capture Mode Timings
VIP2_4A_MANUAL1	VIN4A IOSET1/2 Rise-Edge Capture Mode Timings
VIP2_4A_IOSET3_MANUAL1	VIN4A IOSET3 Rise-Edge Capture Mode Timings
VIP2_4B_MANUAL1	VIN4B Rise-Edge Capture Mode Timings
VIP2_3B_IOSET2_MANUAL1	VIN3B IOSET2 Rise-Edge Capture Mode Timings
VIP2_3B_IOSET2_MANUAL2	VIN3B IOSET2 Fall-Edge Capture Mode Timings
VIP2_MANUAL2	VIN3A, VIN3B IOSET1, VIN4A IOSET1/2 Fall-Edge Capture Mode Timings
VIP2_4A_MANUAL2	VIN4A IOSET1/2 Fall-Edge Capture Mode Timings
VIP2_4A_IOSET3_MANUAL2	VIN4A IOSET3 Fall-Edge Capture Mode Timings
VIP2_4B_MANUAL2	VIN4B Fall-Edge Capture Mode Timings
VIP3_MANUAL1	VIN5A and VIN6A Rise-Edge Capture Mode Timings
VIP3_MANUAL2	VIN5A and VIN6A Fall-Edge Capture Mode Timings
DPI Video Output	
VOUT1_MANUAL1	DPI1 Video Output Alternate Timings
VOUT1_MANUAL2	DPI1 Video Output Default Timings
VOUT1_MANUAL3	DPI1 Video Output MANUAL3 Timings
VOUT1_MANUAL4	DPI1 Video Output MANUAL4 Timings
VOUT2_IOSET1_MANUAL1	DPI2 Video Output IOSET1 Alternate Timings
VOUT2_IOSET1_MANUAL2	DPI2 Video Output IOSET1 Default Timings

表 7-2. Modes Summary (continued)

Virtual or Manual IO Mode Name	Data Manual Timing Mode
VOUT2_IOSET1_MANUAL3	DPI2 Video Output IOSET1 MANUAL3 Timings
VOUT2_IOSET1_MANUAL4	DPI2 Video Output IOSET1 MANUAL4 Timings
VOUT2_IOSET2_MANUAL1	DPI2 Video Output IOSET2 Alternate Timings
VOUT2_IOSET2_MANUAL2	DPI2 Video Output IOSET2 Default Timings
VOUT2_IOSET2_MANUAL3	DPI2 Video Output IOSET2 MANUAL3 Timings
VOUT2_IOSET2_MANUAL4	DPI2 Video Output IOSET2 MANUAL4 Timings
VOUT3_MANUAL1	DPI3 Video Output Alternate Timings
VOUT3_MANUAL2	DPI3 Video Output Default Timings
VOUT3_MANUAL3	DPI3 Video Output MANUAL3 Timings
VOUT3_MANUAL4	DPI3 Video Output MANUAL4 Timings
HDMI, EMIF, Timers, I2C, HDQ/1-Wire, UART, McSPI, USB, SATA, PCIe, DCAN, GPIO, KBD, PWM, JTAG, TPIU, RTC, SDMA, INTC	
No Virtual or Manual IO Timing Mode Required	All Modes
GPMC	
No Virtual or Manual IO Timing Mode Required	GPMC Asyncronous Mode Timings and Synchronous Mode - Default Timings
GPMC_VIRTUAL1	GPMC Synchronous Mode - Alternate Timings
QSPI	
No Virtual or Manual IO Timing Mode Required	QSPI Mode 3 Default Timing Mode
QSPI_MODE0_MANUAL1	QSPI Mode 0 Default Timing Mode
McASP	
No Virtual or Manual IO Timing Mode Required	McASP1 Synchronous Transmit Timings
MCASP1_VIRTUAL1_ASYNC_TX	See 表 7-55
MCASP1_VIRTUAL2_SYNC_RX	See 表 7-55
MCASP1_VIRTUAL3_ASYNC_RX	See 表 7-55
No Virtual or Manual IO Timing Mode Required	McASP2 Synchronous Transmit Timings
MCASP2_VIRTUAL1_ASYNC_RX_80M	See 表 7-56
MCASP2_VIRTUAL2_ASYNC_RX	See 表 7-56
MCASP2_VIRTUAL3_ASYNC_TX	See 表 7-56
MCASP2_VIRTUAL4_SYNC_RX	See 表 7-56
MCASP2_VIRTUAL5_SYNC_RX_80M	See 表 7-56
No Virtual or Manual IO Timing Mode Required	McASP3 Synchronous Transmit Timings
MCASP3_VIRTUAL2_SYNC_RX	See 表 7-57
No Virtual or Manual IO Timing Mode Required	McASP4 Synchronous Transmit Timings
MCASP4_VIRTUAL1_SYNC_RX	See 表 7-58
No Virtual or Manual IO Timing Mode Required	McASP5 Synchronous Transmit Timings
MCASP5_VIRTUAL1_SYNC_RX	See 表 7-59
No Virtual or Manual IO Timing Mode Required	McASP6 Synchronous Transmit Timings
MCASP6_VIRTUAL1_SYNC_RX	See 表 7-60
No Virtual or Manual IO Timing Mode Required	McASP7 Synchronous Transmit Timings
MCASP7_VIRTUAL2_SYNC_RX	See 表 7-61
No Virtual or Manual IO Timing Mode Required	McASP8 Synchronous Transmit Timings

Copyright © 2015–2019, Texas Instruments Incorporated

表 7-2. Modes Summary (continued)

Virtual or Manual IO Mode Name	Data Manual Timing Mode
MCASP8_VIRTUAL1_SYNC_RX	See 表 7-62
GMAC	
No Virtual or Manual IO Timing Mode Required	GMAC MII0 and MII1
GMAC_RMII0_MANUAL1	GMAC RMII0 Timings
GMAC_RMII1_MANUAL1	GMAC RMII1 Timings
GMAC_RGMII0_MANUAL1	GMAC RGMII0 Internal Delay Enabled Timings Mode
GMAC_RGMII1_MANUAL1	GMAC RGMII1 Internal Delay Enabled Timings Mode
eMMC/SD/SDIO	
No Virtual or Manual IO Timing Mode Required	MMC1 DS (Pad Loopback) and SDR12 (Pad Loopback) Timings
MMC1_VIRTUAL1	MMC1 HS (Internal Loopback and Pad Loopback), SDR12 (Internal Loopback), SDR25 Timings (Internal Loopback and Pad Loopback)
MMC1_VIRTUAL2	SDR50 (Pad Loopback) Timings
MMC1_VIRTUAL5	MMC1 DS (Internal Loopback) Timings
MMC1_VIRTUAL6	MMC1 SDR50 (Internal Loopback) Timings
MMC1_VIRTUAL7	MMC1 DDR50 (Internal Loopback) Timings
MMC1_DDR_MANUAL1	MMC1 DDR50 (Pad Loopback) Timings
MMC1_SDR104_MANUAL1	MMC1 SDR104 Timings
No Virtual or Manual IO Timing Mode Required	MMC2 Standard (Pad Loopback), High Speed (Pad Loopback), and DDR (Pad Loopback) Timings
MMC2_DDR_LB_MANUAL1	MMC2 DDR (Internal Loopback) Timings
MMC2_HS200_MANUAL1	MMC2 HS200 Timings
MMC2_STD_HS_LB_MANUAL1	MMC2 Standard (Internal Loopback), High Speed (Internal Loopback) Timings
MMC3_MANUAL1	MMC3 DS, SDR12, HS, SDR25 Timings, SDR50 Timings
MMC4_MANUAL1	MMC4 SDR12, HS, SDR25 Timings
MMC4_DS_MANUAL1	MMC4 DS Timings
PRU-ICSS	
PR1_PRU0_DIR_OUT_MANUAL	PRU-ICSS1 PRU0 Direct Output Mode Timings
PR1_PRU1_DIR_OUT_MANUAL	PRU-ICSS1 PRU1 Direct Output Mode Timings
PR1_PRU0_DIR_IN_MANUAL	PRU-ICSS1 PRU0 Direct Input Mode Timings
PR1_PRU1_DIR_IN_MANUAL	PRU-ICSS1 PRU1 Direct Input Mode Timings
PR1_PRU0_PAR_CAP_MANUAL	PRU-ICSS1 PRU0 Parallel Capture Mode Timings
PR1_PRU1_PAR_CAP_MANUAL	PRU-ICSS1 PRU1 Parallel Capture Mode Timings
PR2_PRU0_DIR_IN_MANUAL1	PRU-ICSS2 PRU0 IOSET1 Direct Input Mode Timings
PR2_PRU0_DIR_IN_MANUAL2	PRU-ICSS2 PRU0 IOSET2 Direct Input Mode Timings
PR2_PRU0_DIR_OUT_MANUAL1	PRU-ICSS2 PRU0 IOSET1 Direct Output Mode Timings
PR2_PRU0_DIR_OUT_MANUAL2	PRU-ICSS2 PRU0 IOSET2 Direct Output Mode Timings
PR2_PRU1_DIR_IN_MANUAL1	PRU-ICSS2 PRU1 IOSET1 Direct Input Mode Timings
PR2_PRU1_DIR_IN_MANUAL2	PRU-ICSS2 PRU1 IOSET2 Direct Input Mode Timings
PR2_PRU1_DIR_OUT_MANUAL1	PRU-ICSS2 PRU1 IOSET1 Direct Output Mode Timings
PR2_PRU1_DIR_OUT_MANUAL2	PRU-ICSS2 PRU1 IOSET2 Direct Output Mode Timings
PR2_PRU0_PAR_CAP_MANUAL1	PRU-ICSS2 PRU0 IOSET1 Parallel Capture Mode Timings
PR2_PRU0_PAR_CAP_MANUAL2	PRU-ICSS2 PRU0 IOSET2 Parallel Capture Mode Timings
PR2_PRU1_PAR_CAP_MANUAL1	PRU-ICSS2 PRU1 IOSET1 Parallel Capture Mode Timings
PR2_PRU1_PAR_CAP_MANUAL2	PRU-ICSS2 PRU1 IOSET2 Parallel Capture Mode Timings

7.6 Video Input Ports (VIP)

The Device includes 3 Video Input Ports (VIP).

表 7-3, 図 7-4 and 図 7-5 present timings and switching characteristics of the VIPs.

> 注意
>
> The IO timings provided in this section are applicable for all combinations of signals for vin1, vin5 and vin6. However, the timings are only valid for vin2, vin3, and vin4 if signals within a single IOSET are used. The IOSETs are defined in the 表 7-4.

表 7-3. Timing Requirements for VIP (1)(2)

NO.	PARAMETER	DESCRIPTION	MODE	MIN	MAX	UNIT
V1	$t_{c(CLK)}$	Cycle time, vin*x*_clk*i* (3) (5)		6.06 (1)		ns
V2	$t_{w(CLKH)}$	Pulse duration, vin*x*_clk*i* high (3) (5)		0.45*P (2)		ns
V3	$t_{w(CLKL)}$	Pulse duration, vin*x*_clk*i* low (3) (5)		0.45*P (2)		ns
V4	$t_{su(CTL/DATA-CLK)}$	Input setup time, Control (vin*x*_de*i*, vin*x*_vsync*i*, vin*x*_fld*i*, vin*x*_hsync*i*) and Data (vin*x*_d*n*) valid to vin*x*_clk*i* transition (3) (4) (5)	vin1*x*, vin2*x*	2.93		ns
			vin5*x*, vin6*x*	3.11		ns
			vin3*x*, vin4*x*	3.11		ns
V5	$t_{h(CLK-CTL/DATA)}$	Input hold time, Control (vin*x*_de*i*, vin*x*_vsync*i*, vin*x*_fld*i*, vin*x*_hsync*i*) and Data (vin*x*_d*n*) valid from vin*x*_clk*i* transition (3) (4) (5)		-0.05		ns

(1) For maximum frequency of 165 MHz.

(2) P = vin*x*_clk*i* period.

(3) *x* in vin*x* = 1a, 1b, 2a, 2b, 3a, 3b, 4a, 4b, 5a and 6a.

(4) *n* in d*n* = 0 to 7 when x = 1b, 2b, 3b and 4b;
n = 0 to 15 when *x* = 5a and 6a;
n = 0 to 23 when *x* = 1a, 2a, 3a and 4a;

(5) *i* in clk*i*, de*i*, vsync*i*, hsync*i* and fld*i* = 0 or 1.

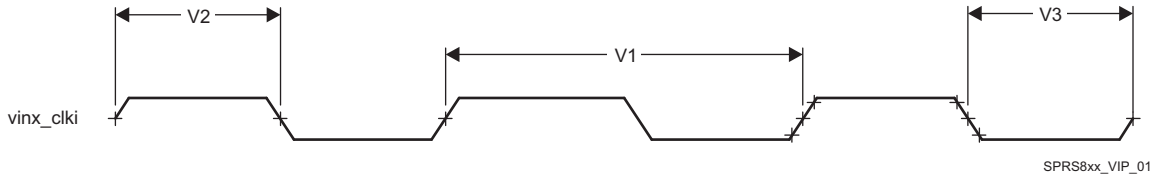

図 7-4. Video Input Ports Clock Signal

Copyright © 2015–2019, Texas Instruments Incorporated

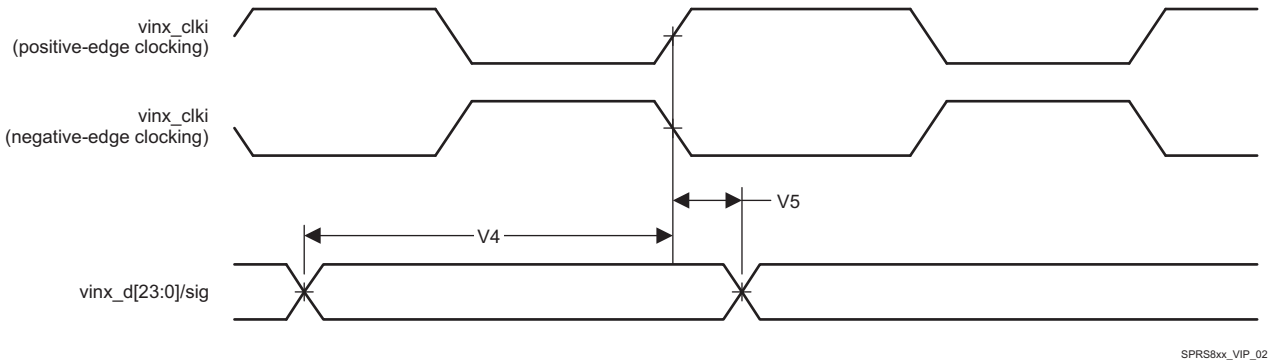

図 7-5. Video Input Ports Timings

In 表 7-4,表 7-5 and 表 7-6 are presented the specific groupings of signals (IOSET) for use with vin2, vin3, and vin4.

表 7-4. VIN2 IOSETs

Signals	IOSET1		IOSET2		IOSET3	
	BALL	MUX	BALL	MUX	BALL	MUX
vin2a						
vin2a_d0	F2	0	F2	0	U4	4
vin2a_d1	F3	0	F3	0	V2	4
vin2a_d2	D1	0	D1	0	Y1	4
vin2a_d3	E2	0	E2	0	W9	4
vin2a_d4	D2	0	D2	0	V9	4
vin2a_d5	F4	0	F4	0	U5	4
vin2a_d6	C1	0	C1	0	V5	4
vin2a_d7	E4	0	E4	0	V4	4
vin2a_d8	F5	0	F5	0	V3	4
vin2a_d9	E6	0	E6	0	Y2	4
vin2a_d10	D3	0	D3	0	U6	4
vin2a_d11	F6	0	F6	0	U3	4
vin2a_d12	D5	0	D5	0	-	-
vin2a_d13	C2	0	C2	0	-	-
vin2a_d14	C3	0	C3	0	-	-
vin2a_d15	C4	0	C4	0	-	-
vin2a_d16	B2	0	B2	0	-	-
vin2a_d17	D6	0	D6	0	-	-
vin2a_d18	C5	0	C5	0	-	-
vin2a_d19	A3	0	A3	0	-	-
vin2a_d20	B3	0	B3	0	-	-
vin2a_d21	B4	0	B4	0	-	-
vin2a_d22	B5	0	B5	0	-	-
vin2a_d23	A4	0	A4	0	-	-
vin2a_hsync0	G1	0	G1	0	U7	4
vin2a_vsync0	G6	0	G6	0	V6	4
vin2a_de0	G2	0	-	-	V7	4
vin2a_fld0	H7	0	G2	1	W2	4
vin2a_clk0	E1	0	E1	0	V1	4
vin2b						

表 7-4. VIN2 IOSETs (continued)

Signals	IOSET1		IOSET2		IOSET3	
	BALL	MUX	BALL	MUX	BALL	MUX
vin2b_clk1	H7	2	H7	2	AB5	4
vin2b_de1	-	-	G2	3	AB8	4
vin2b_fld1	G2	2	-	-	-	-
vin2b_d0	A4	2	A4	2	AD6	4
vin2b_d1	B5	2	B5	2	AC8	4
vin2b_d2	B4	2	B4	2	AC3	4
vin2b_d3	B3	2	B3	2	AC9	4
vin2b_d4	A3	2	A3	2	AC6	4
vin2b_d5	C5	2	C5	2	AC7	4
vin2b_d6	D6	2	D6	2	AC4	4
vin2b_d7	B2	2	B2	2	AD4	4
vin2b_hsync1	G1	3	G1	3	AC5	4
vin2b_vsync1	G6	3	G6	3	AB4	4

表 7-5. VIN3 IOSETs

Signals	IOSET1		IOSET2		IOSET3		IOSET4	
	BALL	MUX	BALL	MUX	BALL	MUX	BALL	MUX
vin3a								
vin3a_d0	M6	2	AF1	6	AF1	6	B7	4
vin3a_d1	M2	2	AE3	6	AE3	6	B8	4
vin3a_d2	L5	2	AE5	6	AE5	6	A7	4
vin3a_d3	M1	2	AE1	6	AE1	6	A8	4
vin3a_d4	L6	2	AE2	6	AE2	6	C9	4
vin3a_d5	L4	2	AE6	6	AE6	6	A9	4
vin3a_d6	L3	2	AD2	6	AD2	6	B9	4
vin3a_d7	L2	2	AD3	6	AD3	6	A10	4
vin3a_d8	L1	2	B2	6	B2	6	E8	4
vin3a_d9	K2	2	D6	6	D6	6	D9	4
vin3a_d10	J1	2	C5	6	C5	6	D7	4
vin3a_d11	J2	2	A3	6	A3	6	D8	4
vin3a_d12	H1	2	B3	6	-	-	A5	4
vin3a_d13	J3	2	B4	6	-	-	C6	4
vin3a_d14	H2	2	B5	6	-	-	C8	4
vin3a_d15	H3	2	A4	6	-	-	C7	4
vin3a_d16	R6	2	-	-	-	-	F11	4
vin3a_d17	T9	2	-	-	-	-	G10	4
vin3a_d18	T6	2	-	-	-	-	F10	4
vin3a_d19	T7	2	-	-	-	-	G11	4
vin3a_d20	P6	2	-	-	-	-	E9	4
vin3a_d21	R9	2	-	-	-	-	F9	4
vin3a_d22	R5	2	-	-	-	-	F8	4
vin3a_d23	P5	2	-	-	-	-	E7	4
vin3a_hsync0	N7	2	N7	2	B5	5	C11	4
vin3a_vsync0	R4	2	R4	2	A4	5	E11	4
vin3a_de0	N9	2	N9	2	B3	5	B10	4
vin3a_fld0	P9	2	P9	2	B4	5	D11	4

Copyright © 2015–2019, Texas Instruments Incorporated

表 7-5. VIN3 IOSETs (continued)

Signals	IOSET1		IOSET2		IOSET3		IOSET4	
	BALL	MUX	BALL	MUX	BALL	MUX	BALL	MUX
vin3a_clk0	P1	2	AH7	6	AH7	6	B11	4
vin3b								
vin3b_clk1	P7	6	M4	4	-	-	-	-
vin3b_de1	N6	6	N6	6	-	-	-	-
vin3b_fld1	M4	6	-	-	-	-	-	-
vin3b_d0	K7	6	K7	6	-	-	-	-
vin3b_d1	M7	6	M7	6	-	-	-	-
vin3b_d2	J5	6	J5	6	-	-	-	-
vin3b_d3	K6	6	K6	6	-	-	-	-
vin3b_d4	J7	6	J7	6	-	-	-	-
vin3b_d5	J4	6	J4	6	-	-	-	-
vin3b_d6	J6	6	J6	6	-	-	-	-
vin3b_d7	H4	6	H4	6	-	-	-	-
vin3b_hsync1	H5	6	H5	6	-	-	-	-
vin3b_vsync1	H6	6	H6	6	-	-	-	-

表 7-6. VIN4 IOSETs

Signals	IOSET1		IOSET2		IOSET3	
	BALL	MUX	BALL	MUX	BALL	MUX
vin4a						
vin4a_d0	R6	4	B7	3	B14	8
vin4a_d1	T9	4	B8	3	J14	8
vin4a_d2	T6	4	A7	3	G13	8
vin4a_d3	T7	4	A8	3	J11	8
vin4a_d4	P6	4	C9	3	E12	8
vin4a_d5	R9	4	A9	3	F13	8
vin4a_d6	R5	4	B9	3	C12	8
vin4a_d7	P5	4	A10	3	D12	8
vin4a_d8	U2	4	E8	3	E15	8
vin4a_d9	U1	4	D9	3	A20	8
vin4a_d10	P3	4	D7	3	B15	8
vin4a_d11	R2	4	D8	3	A15	8
vin4a_d12	K7	4	A5	3	D15	8
vin4a_d13	M7	4	C6	3	B16	8
vin4a_d14	J5	4	C8	3	B17	8
vin4a_d15	K6	4	C7	3	A17	8
vin4a_d16	-	-	F11	3	C18	8
vin4a_d17	-	-	G10	3	A21	8
vin4a_d18	-	-	F10	3	G16	8
vin4a_d19	-	-	G11	3	D17	8
vin4a_d20	-	-	E9	3	AA3	8
vin4a_d21	-	-	F9	3	AB9	8
vin4a_d22	-	-	F8	3	AB3	8
vin4a_d23	-	-	E7	3	AA4	8
vin4a_hsync0	R3/ P7	4 / 4	C11	3	E21	8
vin4a_vsync0	T2/ N1	4 / 4	E11	3	F20	8

表 7-6. VIN4 IOSETs (continued)

Signals	IOSET1		IOSET2		IOSET3	
	BALL	MUX	BALL	MUX	BALL	MUX
vin4a_de0	H6/ P7	4 / 5	B10	3	C23	8
vin4a_fld0	P9/ J7	4 / 4	D11	3	F21	8
vin4a_clk0	P4	4	B11	3	B26	8
vin4b						
vin4b_clk1	N9	6	V1	5	-	-
vin4b_de1	P9	6	V7	5	-	-
vin4b_fld1	P4	6	W2	5	-	-
vin4b_d0	R6	6	U4	5	-	-
vin4b_d1	T9	6	V2	5	-	-
vin4b_d2	T6	6	Y1	5	-	-
vin4b_d3	T7	6	W9	5	-	-
vin4b_d4	P6	6	V9	5	-	-
vin4b_d5	R9	6	U5	5	-	-
vin4b_d6	R5	6	V5	5	-	-
vin4b_d7	P5	6	V4	5	-	-
vin4b_hsync1	N7	6	U7	5	-	-
vin4b_vsync1	R4	6	V6	5	-	-

注: To configure the desired Manual IO Timing Mode the user must follow the steps described in section Manual IO Timing Modes of the Device TRM.

The associated registers to configure are listed in the **CFG REGISTER** column. For more information see the Control Module chapter in the Device TRM.

Manual IO Timings Modes must be used to ensure some IO timings for VIP1. See 表 7-2 *Modes Summary* for a list of IO timings requiring the use of Manual IO Timings Modes. See 表 7-7 *Manual Functions Mapping for VIP1* for a definition of the Manual modes.

表 7-7 lists the A_DELAY and G_DELAY values needed to calculate the correct values to be set in the CFG_x registers.

Copyright © 2015–2019, Texas Instruments Incorporated

表 7-7. Manual Functions Mapping for VIP1

BALL	BALL NAME	VIP1_MANUAL1		VIP1_MANUAL2		CFG REGISTER	MUXMODE				
		A_DELAY (ps)	G_DELAY (ps)	A_DELAY (ps)	G_DELAY (ps)		0	1	2	3	4
U3	RMII_MHZ_50_CLK	1621	614	2018	279	CFG_RMII_MHZ_50_CLK_IN	-	-	-	-	vin2a_d11
N6	gpmc_ben0	1756	1019	2235	494	CFG_GPMC_BEN0_IN	-	-	-	vin1b_hsync1	-
M4	gpmc_ben1	1684	1107	2198	568	CFG_GPMC_BEN1_IN	-	-	-	vin1b_de1	-
U4	mdio_d	1594	417	2007	36	CFG_MDIO_D_IN	-	-	-	-	vin2a_d0
V1	mdio_mclk	0	0	0	0	CFG_MDIO_MCLK_IN	-	-	-	-	vin2a_clk0
U5	rgmii0_rxc	1005	935	1932	0	CFG_RGMII0_RXC_IN	-	-	-	-	vin2a_d5
V5	rgmii0_rxctl	1579	836	1982	485	CFG_RGMII0_RXCTL_IN	-	-	-	-	vin2a_d6
W2	rgmii0_rxd0	1032	1033	1995	0	CFG_RGMII0_RXD0_IN	-	-	-	-	vin2a_fld0
Y2	rgmii0_rxd1	950	1625	1993	673	CFG_RGMII0_RXD1_IN	-	-	-	-	vin2a_d9
V3	rgmii0_rxd2	1578	832	1973	535	CFG_RGMII0_RXD2_IN	-	-	-	-	vin2a_d8
V4	rgmii0_rxd3	1022	1648	2017	740	CFG_RGMII0_RXD3_IN	-	-	-	-	vin2a_d7
W9	rgmii0_txc	1604	769	2020	393	CFG_RGMII0_TXC_IN	-	-	-	-	vin2a_d3
V9	rgmii0_txctl	1060	1389	2074	396	CFG_RGMII0_TXCTL_IN	-	-	-	-	vin2a_d4
U6	rgmii0_txd0	938	1242	2021	194	CFG_RGMII0_TXD0_IN	-	-	-	-	vin2a_d10
V6	rgmii0_txd1	1013	1679	2036	730	CFG_RGMII0_TXD1_IN	-	-	-	-	vin2a_vsync0
U7	rgmii0_txd2	1524	886	1933	526	CFG_RGMII0_TXD2_IN	-	-	-	-	vin2a_hsync0
V7	rgmii0_txd3	1079	1504	2090	490	CFG_RGMII0_TXD3_IN	-	-	-	-	vin2a_de0
V2	uart3_rxd	1530	125	1586	0	CFG_UART3_RXD_IN	-	-	-	-	vin2a_d1
Y1	uart3_txd	1572	487	1980	16	CFG_UART3_TXD_IN	-	-	-	-	vin2a_d2
AG8	vin1a_clk0	0	0	0	0	CFG_VIN1A_CLK0_IN	vin1a_clk0	-	-	-	-
AE8	vin1a_d0	1697	1087	2105	619	CFG_VIN1A_D0_IN	vin1a_d0	-	-	-	-
AD8	vin1a_d1	1589	1164	2017	757	CFG_VIN1A_D1_IN	vin1a_d1	-	-	-	-
AG3	vin1a_d10	1733	1119	2107	739	CFG_VIN1A_D10_IN	vin1a_d10	vin1b_d5	-	-	-
AG5	vin1a_d11	1563	1210	2005	788	CFG_VIN1A_D11_IN	vin1a_d11	vin1b_d4	-	-	-
AF2	vin1a_d12	1705	1647	2059	1297	CFG_VIN1A_D12_IN	vin1a_d12	vin1b_d3	-	-	-
AF6	vin1a_d13	1624	1525	2027	1141	CFG_VIN1A_D13_IN	vin1a_d13	vin1b_d2	-	-	-
AF3	vin1a_d14	1730	1655	2071	1332	CFG_VIN1A_D14_IN	vin1a_d14	vin1b_d1	-	-	-
AF4	vin1a_d15	1681	2004	1995	1764	CFG_VIN1A_D15_IN	vin1a_d15	vin1b_d0	-	-	-
AF1	vin1a_d16	1659	1813	1999	1542	CFG_VIN1A_D16_IN	vin1a_d16	vin1b_d7	-	-	-
AE3	vin1a_d17	1715	1887	2072	1540	CFG_VIN1A_D17_IN	vin1a_d17	vin1b_d6	-	-	-

Copyright © 2015–2019, Texas Instruments Incorporated

表 7-7. Manual Functions Mapping for VIP1 (continued)

BALL	BALL NAME	VIP1_MANUAL1		VIP1_MANUAL2		CFG REGISTER	MUXMODE				
		A_DELAY (ps)	G_DELAY (ps)	A_DELAY (ps)	G_DELAY (ps)		0	1	2	3	4
AE5	vin1a_d18	1728	1898	2034	1629	CFG_VIN1A_D18_IN	vin1a_d18	vin1b_d5	-	-	-
AE1	vin1a_d19	1707	2006	2026	1761	CFG_VIN1A_D19_IN	vin1a_d19	vin1b_d4	-	-	-
AG7	vin1a_d2	1557	1414	1996	962	CFG_VIN1A_D2_IN	vin1a_d2	-	-	-	-
AE2	vin1a_d20	1695	1814	2037	1469	CFG_VIN1A_D20_IN	vin1a_d20	vin1b_d3	-	-	-
AE6	vin1a_d21	1757	1682	2077	1349	CFG_VIN1A_D21_IN	vin1a_d21	vin1b_d2	-	-	-
AD2	vin1a_d22	1683	1813	2022	1545	CFG_VIN1A_D22_IN	vin1a_d22	vin1b_d1	-	-	-
AD3	vin1a_d23	1833	1187	2168	784	CFG_VIN1A_D23_IN	vin1a_d23	vin1b_d0	-	-	-
AH6	vin1a_d3	1588	1289	1993	901	CFG_VIN1A_D3_IN	vin1a_d3	-	-	-	-
AH3	vin1a_d4	1687	949	2098	499	CFG_VIN1A_D4_IN	vin1a_d4	-	-	-	-
AH5	vin1a_d5	1616	1257	2038	844	CFG_VIN1A_D5_IN	vin1a_d5	-	-	-	-
AG6	vin1a_d6	1582	1265	2002	863	CFG_VIN1A_D6_IN	vin1a_d6	-	-	-	-
AH4	vin1a_d7	1659	1255	2063	873	CFG_VIN1A_D7_IN	vin1a_d7	-	-	-	-
AG4	vin1a_d8	1681	1205	2088	759	CFG_VIN1A_D8_IN	vin1a_d8	vin1b_d7	-	-	-
AG2	vin1a_d9	1778	1168	2152	701	CFG_VIN1A_D9_IN	vin1a_d9	vin1b_d6	-	-	-
AD9	vin1a_de0	1468	1290	1926	728	CFG_VIN1A_DE0_IN	vin1a_de0	vin1b_hsync 1	-	-	-
AF9	vin1a_fld0	1633	1425	2043	937	CFG_VIN1A_FLD0_IN	vin1a_fld0	vin1b_vsync1	-	-	-
AE9	vin1a_hsync0	1561	1424	1978	909	CFG_VIN1A_HSYNC0_IN	vin1a_hsync 0	vin1b_fld1	-	-	-
AF8	vin1a_vsync0	1470	1369	1926	987	CFG_VIN1A_VSYNC0_IN	vin1a_vsync0	vin1b_de1	-	-	-
AH7	vin1b_clk1	69	150	242	0	CFG_VIN1B_CLK1_IN	vin1b_clk1	-	-	-	-
E1	vin2a_clk0	0	0	0	0	CFG_VIN2A_CLK0_IN	vin2a_clk0	-	-	-	-
F2	vin2a_d0	1597	561	2009	147	CFG_VIN2A_D0_IN	vin2a_d0	-	-	-	-
F3	vin2a_d1	1598	801	2015	561	CFG_VIN2A_D1_IN	vin2a_d1	-	-	-	-
D3	vin2a_d10	1576	655	2021	377	CFG_VIN2A_D10_IN	vin2a_d10	-	-	-	-
F6	vin2a_d11	1488	340	1940	19	CFG_VIN2A_D11_IN	vin2a_d11	-	-	-	-
D5	vin2a_d12	1399	612	1895	181	CFG_VIN2A_D12_IN	vin2a_d12	-	-	-	-
C2	vin2a_d13	1595	439	2063	15	CFG_VIN2A_D13_IN	vin2a_d13	-	-	-	-
C3	vin2a_d14	1480	243	1709	0	CFG_VIN2A_D14_IN	vin2a_d14	-	-	-	-
C4	vin2a_d15	1415	755	1899	369	CFG_VIN2A_D15_IN	vin2a_d15	-	-	-	-
B2	vin2a_d16	1341	653	1821	317	CFG_VIN2A_D16_IN	vin2a_d16	-	vin2b_d7	-	-
D6	vin2a_d17	1396	724	1880	349	CFG_VIN2A_D17_IN	vin2a_d17	-	vin2b_d6	-	-

Copyright © 2015–2019, Texas Instruments Incorporated

表 7-7. Manual Functions Mapping for VIP1 (continued)

BALL	BALL NAME	VIP1_MANUAL1		VIP1_MANUAL2		CFG REGISTER	MUXMODE				
		A_DELAY (ps)	G_DELAY (ps)	A_DELAY (ps)	G_DELAY (ps)		0	1	2	3	4
C5	vin2a_d18	1582	364	1963	0	CFG_VIN2A_D18_IN	vin2a_d18	-	vin2b_d5	-	-
A3	vin2a_d19	1308	289	1681	0	CFG_VIN2A_D19_IN	vin2a_d19	-	vin2b_d4	-	-
D1	vin2a_d2	1600	323	2021	0	CFG_VIN2A_D2_IN	vin2a_d2	-	-	-	-
B3	vin2a_d20	1307	586	1772	299	CFG_VIN2A_D20_IN	vin2a_d20	-	vin2b_d3	-	-
B4	vin2a_d21	1301	640	1787	282	CFG_VIN2A_D21_IN	vin2a_d21	-	vin2b_d2	-	-
B5	vin2a_d22	1316	534	1789	223	CFG_VIN2A_D22_IN	vin2a_d22	-	vin2b_d1	-	-
A4	vin2a_d23	1311	613	1788	286	CFG_VIN2A_D23_IN	vin2a_d23	-	vin2b_d0	-	-
E2	vin2a_d3	1765	720	2142	492	CFG_VIN2A_D3_IN	vin2a_d3	-	-	-	-
D2	vin2a_d4	1680	282	2071	0	CFG_VIN2A_D4_IN	vin2a_d4	-	-	-	-
F4	vin2a_d5	1791	696	2155	461	CFG_VIN2A_D5_IN	vin2a_d5	-	-	-	-
C1	vin2a_d6	1538	175	1849	0	CFG_VIN2A_D6_IN	vin2a_d6	-	-	-	-
E4	vin2a_d7	1546	451	1977	192	CFG_VIN2A_D7_IN	vin2a_d7	-	-	-	-
F5	vin2a_d8	1522	650	1966	391	CFG_VIN2A_D8_IN	vin2a_d8	-	-	-	-
E6	vin2a_d9	1546	578	1996	270	CFG_VIN2A_D9_IN	vin2a_d9	-	-	-	-
G2	vin2a_de0	1548	623	2036	213	CFG_VIN2A_DE0_IN	vin2a_de0	vin2a_fld0	vin2b_fld1	vin2b_de1	-
H7	vin2a_fld0	1771	815	2162	566	CFG_VIN2A_FLD0_IN	vin2a_fld0	-	vin2b_clk1	-	-
G1	vin2a_hsync0	1703	587	2071	225	CFG_VIN2A_HSYNC0_IN	vin2a_hsync 0	-	-	vin2b_hsync 1	-
G6	vin2a_vsync0	1486	464	1895	53	CFG_VIN2A_VSYNC0_IN	vin2a_vsync0	-	-	vin2b_vsync1	-

Manual IO Timings Modes must be used to ensure some IO timings for VIP1. See 表 7-2 *Modes Summary* for a list of IO timings requiring the use of Manual IO Timings Modes. See 表 7-8 *Manual Functions Mapping for VIP1 2B* for a definition of the Manual modes.

表 7-8 lists the A_DELAY and G_DELAY values needed to calculate the correct values to be set in the CFG_x registers.

表 7-8. Manual Functions Mapping for VIP1 2B

BALL	BALL NAME	VIP1_2B_MANUAL1		VIP1_2B_MANUAL2		CFG REGISTER	MUXMODE		
		A_DELAY (ps)	G_DELAY (ps)	A_DELAY (ps)	G_DELAY (ps)		2	3	4
AC5	gpio6_10	1830	911	2136	593	CFG_GPIO6_10_IN	-	-	vin2b_hsync1
AB4	gpio6_11	1797	1159	2088	926	CFG_GPIO6_11_IN	-	-	vin2b_vsync1
AD4	mmc3_clk	(1)	(1)	(1)	(1)	CFG_MMC3_CLK_IN	-	-	vin2b_d7
AC4	mmc3_cmd	1769	980	2092	650	CFG_MMC3_CMD_IN	-	-	vin2b_d6
AC7	mmc3_dat0	1678	984	2027	691	CFG_MMC3_DAT0_IN	-	-	vin2b_d5

Copyright © 2015–2019, Texas Instruments Incorporated

表 7-8. Manual Functions Mapping for VIP1 2B (continued)

BALL	BALL NAME	VIP1_2B_MANUAL1		VIP1_2B_MANUAL2		CFG REGISTER	MUXMODE		
		A_DELAY (ps)	G_DELAY (ps)	A_DELAY (ps)	G_DELAY (ps)		2	3	4
AC6	mmc3_dat1	1664	883	2031	491	CFG_MMC3_DAT1_IN	-	-	vin2b_d4
AC9	mmc3_dat2	1672	439	2065	0	CFG_MMC3_DAT2_IN	-	-	vin2b_d3
AC3	mmc3_dat3	1762	1078	2089	799	CFG_MMC3_DAT3_IN	-	-	vin2b_d2
AC8	mmc3_dat4	1766	583	2125	135	CFG_MMC3_DAT4_IN	-	-	vin2b_d1
AD6	mmc3_dat5	1777	577	2072	362	CFG_MMC3_DAT5_IN	-	-	vin2b_d0
AB8	mmc3_dat6	1675	808	2035	431	CFG_MMC3_DAT6_IN	-	-	vin2b_de1
AB5	mmc3_dat7	0	0	0	0	CFG_MMC3_DAT7_IN	-	-	vin2b_clk1
B2	vin2a_d16	1181	0	1424	0	CFG_VIN2A_D16_IN	vin2b_d7	-	-
D6	vin2a_d17	1317	0	1545	0	CFG_VIN2A_D17_IN	vin2b_d6	-	-
C5	vin2a_d18	1132	0	1240	0	CFG_VIN2A_D18_IN	vin2b_d5	-	-
A3	vin2a_d19	749	0	919	0	CFG_VIN2A_D19_IN	vin2b_d4	-	-
B3	vin2a_d20	1078	0	1320	0	CFG_VIN2A_D20_IN	vin2b_d3	-	-
B4	vin2a_d21	1119	0	1357	0	CFG_VIN2A_D21_IN	vin2b_d2	-	-
B5	vin2a_d22	1089	0	1306	0	CFG_VIN2A_D22_IN	vin2b_d1	-	-
A4	vin2a_d23	1118	0	1362	0	CFG_VIN2A_D23_IN	vin2b_d0	-	-
G2	vin2a_de0	1371	420	1813	86	CFG_VIN2A_DE0_IN	vin2b_fld1	vin2b_de1	-
H7	vin2a_fld0	0	0	0	0	CFG_VIN2A_FLD0_IN	vin2b_clk1	-	-
G1	vin2a_hsync0	1605	0	1674	0	CFG_VIN2A_HSYNC0_IN	-	vin2b_hsync1	-
G6	vin2a_vsync0	1231	0	1300	0	CFG_VIN2A_VSYNC0_IN	-	vin2b_vsync1	-

(1) The CFG_MMC3_CLK_IN register should remain at its Default value, which is programmed automatically by hardware during the recalibration process.

Manual IO Timings Modes must be used to ensure some IO timings for VIP2. See 表 7-2 *Modes Summary* for a list of IO timings requiring the use of Manual IO Timings Modes. See 表 7-9 *Manual Functions Mapping for VIP2* for a definition of the Manual modes.

表 7-9 lists the A_DELAY and G_DELAY values needed to calculate the correct values to be set in the CFG_x registers.

表 7-9. Manual Functions Mapping for VIP2

BALL	BALL NAME	VIP2_MANUAL 1		VIP2_MANUAL2		CFG REGISTER	MUXMODE				
		A_DELAY (ps)	G_DELAY (ps)	A_DELAY (ps)	G_DELAY (ps)		2	3	4	5	6
R6	gpmc_a0	2216	947	2519	702	CFG_GPMC_A0_IN	vin3a_d16	-	vin4a_d0	-	-
T9	gpmc_a1	2078	1022	2384	778	CFG_GPMC_A1_IN	vin3a_d17	-	vin4a_d1	-	-
N9	gpmc_a10	2108	823	2435	411	CFG_GPMC_A10_IN	vin3a_de0	-	-	-	-
P9	gpmc_a11	2068	977	2379	755	CFG_GPMC_A11_IN	vin3a_fld0	-	vin4a_fld0	-	-

Copyright © 2015–2019, Texas Instruments Incorporated

表 7-9. Manual Functions Mapping for VIP2 (continued)

BALL	BALL NAME	VIP2_MANUAL 1		VIP2_MANUAL2		CFG REGISTER	MUXMODE				
		A_DELAY (ps)	G_DELAY (ps)	A_DELAY (ps)	G_DELAY (ps)		2	3	4	5	6
K7	gpmc_a19	1740	123	1743	0	CFG_GPMC_A19_IN	-	-	vin4a_d12	-	vin3b_d0
T6	gpmc_a2	2280	1298	2499	1127	CFG_GPMC_A2_IN	vin3a_d18	-	vin4a_d2	-	-
M7	gpmc_a20	1628	30	1529	0	CFG_GPMC_A20_IN	-	-	vin4a_d13	-	vin3b_d1
J5	gpmc_a21	1687	217	1779	0	CFG_GPMC_A21_IN	-	-	vin4a_d14	-	vin3b_d2
K6	gpmc_a22	1595	151	1620	0	CFG_GPMC_A22_IN	-	-	vin4a_d15	-	vin3b_d3
J7	gpmc_a23	1366	0	1363	0	CFG_GPMC_A23_IN	-	-	vin4a_fld0	-	vin3b_d4
J4	gpmc_a24	1554	343	1765	0	CFG_GPMC_A24_IN	-	-	-	-	vin3b_d5
J6	gpmc_a25	1652	268	1808	0	CFG_GPMC_A25_IN	-	-	-	-	vin3b_d6
H4	gpmc_a26	1546	281	1669	0	CFG_GPMC_A26_IN	-	-	-	-	vin3b_d7
H5	gpmc_a27	1534	198	1611	0	CFG_GPMC_A27_IN	-	-	-	-	vin3b_hsync1
T7	gpmc_a3	2246	1318	2455	1181	CFG_GPMC_A3_IN	vin3a_d19	-	vin4a_d3	-	-
P6	gpmc_a4	2266	1216	2486	1039	CFG_GPMC_A4_IN	vin3a_d20	-	vin4a_d4	-	-
R9	gpmc_a5	2185	1122	2456	938	CFG_GPMC_A5_IN	vin3a_d21	-	vin4a_d5	-	-
R5	gpmc_a6	2206	782	2463	573	CFG_GPMC_A6_IN	vin3a_d22	-	vin4a_d6	-	-
P5	gpmc_a7	2369	1025	2608	783	CFG_GPMC_A7_IN	vin3a_d23	-	vin4a_d7	-	-
N7	gpmc_a8	2154	978	2430	656	CFG_GPMC_A8_IN	vin3a_hsync0	-	-	-	-
R4	gpmc_a9	2185	1152	2465	850	CFG_GPMC_A9_IN	vin3a_vsync0	-	-	-	-
M6	gpmc_ad0	1908	620	2316	301	CFG_GPMC_AD0_IN	vin3a_d0	-	-	-	-
M2	gpmc_ad1	2117	382	2440	70	CFG_GPMC_AD1_IN	vin3a_d1	-	-	-	-
J1	gpmc_ad10	1968	686	2324	406	CFG_GPMC_AD10_IN	vin3a_d10	-	-	-	-
J2	gpmc_ad11	1853	689	2278	352	CFG_GPMC_AD11_IN	vin3a_d11	-	-	-	-
H1	gpmc_ad12	1910	497	2297	160	CFG_GPMC_AD12_IN	vin3a_d12	-	-	-	-
J3	gpmc_ad13	1869	436	2278	108	CFG_GPMC_AD13_IN	vin3a_d13	-	-	-	-
H2	gpmc_ad14	1895	147	2035	0	CFG_GPMC_AD14_IN	vin3a_d14	-	-	-	-
H3	gpmc_ad15	1917	655	2279	378	CFG_GPMC_AD15_IN	vin3a_d15	-	-	-	-
L5	gpmc_ad2	2097	666	2404	446	CFG_GPMC_AD2_IN	vin3a_d2	-	-	-	-
M1	gpmc_ad3	1954	581	2343	212	CFG_GPMC_AD3_IN	vin3a_d3	-	-	-	-
L6	gpmc_ad4	2034	610	2355	322	CFG_GPMC_AD4_IN	vin3a_d4	-	-	-	-
L4	gpmc_ad5	1965	484	2337	192	CFG_GPMC_AD5_IN	vin3a_d5	-	-	-	-
L3	gpmc_ad6	1861	635	2270	314	CFG_GPMC_AD6_IN	vin3a_d6	-	-	-	-
L2	gpmc_ad7	2004	507	2339	259	CFG_GPMC_AD7_IN	vin3a_d7	-	-	-	-
L1	gpmc_ad8	1945	853	2308	577	CFG_GPMC_AD8_IN	vin3a_d8	-	-	-	-

Copyright © 2015–2019, Texas Instruments Incorporated

表 7-9. Manual Functions Mapping for VIP2 (continued)

BALL	BALL NAME	VIP2_MANUAL 1		VIP2_MANUAL2		CFG REGISTER	MUXMODE				
		A_DELAY (ps)	G_DELAY (ps)	A_DELAY (ps)	G_DELAY (ps)		2	3	4	5	6
K2	gpmc_ad9	1914	539	2334	166	CFG_GPMC_AD9_IN	vin3a_d9	-	-	-	-
N6	gpmc_ben0	1806	0	1722	0	CFG_GPMC_BEN0_IN	-	-	-	-	vin3b_de1
M4	gpmc_ben1	1879	20	1840	0	CFG_GPMC_BEN1_IN	-	-	vin3b_clk1	-	vin3b_fld1
P7	gpmc_clk	0	0	0	0	CFG_GPMC_CLK_IN	-	-	vin4a_hsync0	vin4a_de0	vin3b_clk1
H6	gpmc_cs1	1505	41	1388	0	CFG_GPMC_CS1_IN	-	-	vin4a_de0	-	vin3b_vsync1
P1	gpmc_cs3	0	0	0	0	CFG_GPMC_CS3_IN	vin3a_clk0	-	-	-	-
AF1	vin1a_d16	1803	1679	2244	1202	CFG_VIN1A_D16_IN	-	-	-	-	vin3a_d0
AE3	vin1a_d17	1871	1654	2321	1116	CFG_VIN1A_D17_IN	-	-	-	-	vin3a_d1
AE5	vin1a_d18	1875	1742	2280	1288	CFG_VIN1A_D18_IN	-	-	-	-	vin3a_d2
AE1	vin1a_d19	1844	1759	2282	1281	CFG_VIN1A_D19_IN	-	-	-	-	vin3a_d3
AE2	vin1a_d20	1845	1624	2284	1090	CFG_VIN1A_D20_IN	-	-	-	-	vin3a_d4
AE6	vin1a_d21	1906	1520	2324	1000	CFG_VIN1A_D21_IN	-	-	-	-	vin3a_d5
AD2	vin1a_d22	1807	1437	2278	915	CFG_VIN1A_D22_IN	-	-	-	-	vin3a_d6
AD3	vin1a_d23	1996	997	2423	398	CFG_VIN1A_D23_IN	-	-	-	-	vin3a_d7
AH7	vin1b_clk1	0	0	0	0	CFG_VIN1B_CLK1_IN	-	-	-	-	vin3a_clk0
B2	vin2a_d16	1329	528	1779	0	CFG_VIN2A_D16_IN	-	-	-	-	vin3a_d8
D6	vin2a_d17	1270	677	1844	0	CFG_VIN2A_D17_IN	-	-	-	-	vin3a_d9
C5	vin2a_d18	1494	411	1767	0	CFG_VIN2A_D18_IN	-	-	-	-	vin3a_d10
A3	vin2a_d19	1225	154	1254	0	CFG_VIN2A_D19_IN	-	-	-	-	vin3a_d11
B3	vin2a_d20	1212	450	1597	0	CFG_VIN2A_D20_IN	-	-	-	vin3a_de0	vin3a_d12
B4	vin2a_d21	1232	494	1662	0	CFG_VIN2A_D21_IN	-	-	-	vin3a_fld0	vin3a_d13
B5	vin2a_d22	1203	503	1641	0	CFG_VIN2A_D22_IN	-	-	-	vin3a_hsync0	vin3a_d14
A4	vin2a_d23	1214	599	1748	0	CFG_VIN2A_D23_IN	-	-	-	vin3a_vsync0	vin3a_d15
D11	vout1_clk	2047	735	2391	637	CFG_VOUT1_CLK_IN	-	vin4a_fld0	vin3a_fld0	-	-
F11	vout1_d0	2135	987	2403	965	CFG_VOUT1_D0_IN	-	vin4a_d16	vin3a_d16	-	-
G10	vout1_d1	2048	955	2368	880	CFG_VOUT1_D1_IN	-	vin4a_d17	vin3a_d17	-	-
D7	vout1_d10	1970	855	2347	724	CFG_VOUT1_D10_IN	-	vin4a_d10	vin3a_d10	-	-
D8	vout1_d11	2111	893	2389	861	CFG_VOUT1_D11_IN	-	vin4a_d11	vin3a_d11	-	-
A5	vout1_d12	2018	841	2356	748	CFG_VOUT1_D12_IN	-	vin4a_d12	vin3a_d12	-	-
C6	vout1_d13	2073	805	2382	731	CFG_VOUT1_D13_IN	-	vin4a_d13	vin3a_d13	-	-
C8	vout1_d14	2112	770	2401	703	CFG_VOUT1_D14_IN	-	vin4a_d14	vin3a_d14	-	-
C7	vout1_d15	2132	831	2434	771	CFG_VOUT1_D15_IN	-	vin4a_d15	vin3a_d15	-	-

Copyright © 2015–2019, Texas Instruments Incorporated

表 7-9. Manual Functions Mapping for VIP2 (continued)

BALL	BALL NAME	VIP2_MANUAL 1		VIP2_MANUAL2		CFG REGISTER	MUXMODE				
		A_DELAY (ps)	G_DELAY (ps)	A_DELAY (ps)	G_DELAY (ps)		2	3	4	5	6
B7	vout1_d16	1996	632	2338	536	CFG_VOUT1_D16_IN	-	vin4a_d0	vin3a_d0	-	-
B8	vout1_d17	2190	790	2442	775	CFG_VOUT1_D17_IN	-	vin4a_d1	vin3a_d1	-	-
A7	vout1_d18	2100	604	2385	565	CFG_VOUT1_D18_IN	-	vin4a_d2	vin3a_d2	-	-
A8	vout1_d19	2108	286	2424	168	CFG_VOUT1_D19_IN	-	vin4a_d3	vin3a_d3	-	-
F10	vout1_d2	1979	1020	2335	909	CFG_VOUT1_D2_IN	-	vin4a_d18	vin3a_d18	-	-
C9	vout1_d20	2031	967	2362	881	CFG_VOUT1_D20_IN	-	vin4a_d4	vin3a_d4	-	-
A9	vout1_d21	2039	450	2350	384	CFG_VOUT1_D21_IN	-	vin4a_d5	vin3a_d5	-	-
B9	vout1_d22	2037	583	2369	497	CFG_VOUT1_D22_IN	-	vin4a_d6	vin3a_d6	-	-
A10	vout1_d23	1768	740	2246	508	CFG_VOUT1_D23_IN	-	vin4a_d7	vin3a_d7	-	-
G11	vout1_d3	2099	881	2382	844	CFG_VOUT1_D3_IN	-	vin4a_d19	vin3a_d19	-	-
E9	vout1_d4	2120	786	2387	756	CFG_VOUT1_D4_IN	-	vin4a_d20	vin3a_d20	-	-
F9	vout1_d5	1965	857	2299	769	CFG_VOUT1_D5_IN	-	vin4a_d21	vin3a_d21	-	-
F8	vout1_d6	2139	680	2366	699	CFG_VOUT1_D6_IN	-	vin4a_d22	vin3a_d22	-	-
E7	vout1_d7	2122	912	2360	920	CFG_VOUT1_D7_IN	-	vin4a_d23	vin3a_d23	-	-
E8	vout1_d8	2073	906	2372	853	CFG_VOUT1_D8_IN	-	vin4a_d8	vin3a_d8	-	-
D9	vout1_d9	2097	934	2386	879	CFG_VOUT1_D9_IN	-	vin4a_d9	vin3a_d9	-	-
B10	vout1_de	2021	527	2366	428	CFG_VOUT1_DE_IN	-	vin4a_de0	vin3a_de0	-	-
B11	vout1_fld	0	0	0	0	CFG_VOUT1_FLD_IN	-	vin4a_clk0	vin3a_clk0	-	-
C11	vout1_hsync	1775	486	2272	164	CFG_VOUT1_HSYNC_IN	-	vin4a_hsync0	vin3a_hsync0	-	-
E11	vout1_vsync	1917	314	2301	0	CFG_VOUT1_VSYNC_IN	-	vin4a_vsync0	vin3a_vsync0	-	-

Manual IO Timings Modes must be used to ensure some IO timings for VIP2. See 表 7-2 *Modes Summary* for a list of IO timings requiring the use of Manual IO Timings Modes. See 表 7-10 *Manual Functions Mapping for VIP2 4A* for a definition of the Manual modes.

表 7-10 lists the A_DELAY and G_DELAY values needed to calculate the correct values to be set in the CFG_x registers.

表 7-10. Manual Functions Mapping for VIP2 4A

BALL	BALL NAME	VIP2_4A_MANUAL1		VIP2_4A_MANUAL2		CFG REGISTER	MUXMODE		
		A_DELAY (ps)	G_DELAY (ps)	A_DELAY (ps)	G_DELAY (ps)		3	4	5
R6	gpmc_a0	1801	521	2268	0	CFG_GPMC_A0_IN	-	vin4a_d0	-
T9	gpmc_a1	1668	488	2135	0	CFG_GPMC_A1_IN	-	vin4a_d1	-

表 7-10. Manual Functions Mapping for VIP2 4A (continued)

BALL	BALL NAME	VIP2_4A_MANUAL1		VIP2_4A_MANUAL2		CFG REGISTER	MUXMODE		
		A_DELAY (ps)	G_DELAY (ps)	A_DELAY (ps)	G_DELAY (ps)		3	4	5
P9	gpmc_a11	1694	308	2026	0	CFG_GPMC_A11_IN	-	vin4a_fld0	-
P4	gpmc_a12	0	0	0	0	CFG_GPMC_A12_IN	-	vin4a_clk0	-
R3	gpmc_a13	1529	570	2029	38	CFG_GPMC_A13_IN	-	vin4a_hsync0	-
T2	gpmc_a14	1747	753	2266	261	CFG_GPMC_A14_IN	-	vin4a_vsync0	-
U2	gpmc_a15	1536	336	1882	0	CFG_GPMC_A15_IN	-	vin4a_d8	-
U1	gpmc_a16	1662	293	1936	0	CFG_GPMC_A16_IN	-	vin4a_d9	-
P3	gpmc_a17	1637	247	1851	0	CFG_GPMC_A17_IN	-	vin4a_d10	-
R2	gpmc_a18	1454	0	1369	0	CFG_GPMC_A18_IN	-	vin4a_d11	-
K7	gpmc_a19	1577	205	1634	0	CFG_GPMC_A19_IN	-	vin4a_d12	-
T6	gpmc_a2	1891	747	2369	238	CFG_GPMC_A2_IN	-	vin4a_d2	-
M7	gpmc_a20	1398	220	1450	0	CFG_GPMC_A20_IN	-	vin4a_d13	-
J5	gpmc_a21	1521	329	1691	0	CFG_GPMC_A21_IN	-	vin4a_d14	-
K6	gpmc_a22	1383	273	1488	0	CFG_GPMC_A22_IN	-	vin4a_d15	-
J7	gpmc_a23	1163	0	1147	0	CFG_GPMC_A23_IN	-	vin4a_fld0	-
T7	gpmc_a3	1820	786	2325	271	CFG_GPMC_A3_IN	-	vin4a_d3	-
P6	gpmc_a4	1865	662	2359	126	CFG_GPMC_A4_IN	-	vin4a_d4	-
R9	gpmc_a5	1722	629	2260	53	CFG_GPMC_A5_IN	-	vin4a_d5	-
R5	gpmc_a6	1755	279	1990	0	CFG_GPMC_A6_IN	-	vin4a_d6	-
P5	gpmc_a7	1979	506	2410	0	CFG_GPMC_A7_IN	-	vin4a_d7	-
N1	gpmc_advn_ale	1793	267	2045	0	CFG_GPMC_ADVN_ALE_IN	-	vin4a_vsync0	-
P7	gpmc_clk	1738	309	2040	0	CFG_GPMC_CLK_IN	-	vin4a_hsync0	vin4a_de0
H6	gpmc_cs1	1379	95	1361	0	CFG_GPMC_CS1_IN	-	vin4a_de0	-
D11	vout1_clk	2090	401	2409	357	CFG_VOUT1_CLK_IN	vin4a_fld0	-	-
F11	vout1_d0	2139	961	2394	981	CFG_VOUT1_D0_IN	vin4a_d16	-	-
G10	vout1_d1	1993	878	2347	799	CFG_VOUT1_D1_IN	vin4a_d17	-	-
D7	vout1_d10	1976	678	2346	583	CFG_VOUT1_D10_IN	vin4a_d10	-	-
D8	vout1_d11	2135	749	2393	767	CFG_VOUT1_D11_IN	vin4a_d11	-	-
A5	vout1_d12	2014	696	2351	634	CFG_VOUT1_D12_IN	vin4a_d12	-	-
C6	vout1_d13	2035	590	2370	531	CFG_VOUT1_D13_IN	vin4a_d13	-	-
C8	vout1_d14	2108	861	2385	860	CFG_VOUT1_D14_IN	vin4a_d14	-	-
C7	vout1_d15	2074	682	2423	609	CFG_VOUT1_D15_IN	vin4a_d15	-	-
B7	vout1_d16	1976	579	2331	500	CFG_VOUT1_D16_IN	vin4a_d0	-	-

Copyright © 2015–2019, Texas Instruments Incorporated

表 7-10. Manual Functions Mapping for VIP2 4A (continued)

BALL	BALL NAME	VIP2_4A_MANUAL1		VIP2_4A_MANUAL2		CFG REGISTER	MUXMODE		
		A_DELAY (ps)	G_DELAY (ps)	A_DELAY (ps)	G_DELAY (ps)		3	4	5
B8	vout1_d17	2203	505	2464	509	CFG_VOUT1_D17_IN	vin4a_d1	-	-
A7	vout1_d18	2096	412	2394	390	CFG_VOUT1_D18_IN	vin4a_d2	-	-
A8	vout1_d19	2106	72	2423	21	CFG_VOUT1_D19_IN	vin4a_d3	-	-
F10	vout1_d2	2023	648	2374	572	CFG_VOUT1_D2_IN	vin4a_d18	-	-
C9	vout1_d20	2027	767	2370	700	CFG_VOUT1_D20_IN	vin4a_d4	-	-
A9	vout1_d21	2026	184	2354	128	CFG_VOUT1_D21_IN	vin4a_d5	-	-
B9	vout1_d22	2061	195	2397	135	CFG_VOUT1_D22_IN	vin4a_d6	-	-
A10	vout1_d23	1764	607	2251	396	CFG_VOUT1_D23_IN	vin4a_d7	-	-
G11	vout1_d3	2053	757	2377	707	CFG_VOUT1_D3_IN	vin4a_d19	-	-
E9	vout1_d4	2119	617	2392	619	CFG_VOUT1_D4_IN	vin4a_d20	-	-
F9	vout1_d5	1951	712	2305	633	CFG_VOUT1_D5_IN	vin4a_d21	-	-
F8	vout1_d6	2119	515	2365	543	CFG_VOUT1_D6_IN	vin4a_d22	-	-
E7	vout1_d7	2119	779	2363	810	CFG_VOUT1_D7_IN	vin4a_d23	-	-
E8	vout1_d8	2043	807	2357	768	CFG_VOUT1_D8_IN	vin4a_d8	-	-
D9	vout1_d9	2166	643	2412	671	CFG_VOUT1_D9_IN	vin4a_d9	-	-
B10	vout1_de	1982	410	2353	314	CFG_VOUT1_DE_IN	vin4a_de0	-	-
B11	vout1_fld	0	0	0	0	CFG_VOUT1_FLD_IN	vin4a_clk0	-	-
C11	vout1_hsync	1755	305	2269	4	CFG_VOUT1_HSYNC_IN	vin4a_hsync0	-	-
E11	vout1_vsync	1924	8	2066	0	CFG_VOUT1_VSYNC_IN	vin4a_vsync0	-	-

Manual IO Timings Modes must be used to ensure some IO timings for VIP2. See 表 7-2 *Modes Summary* for a list of IO timings requiring the use of Manual IO Timings Modes. See 表 7-11 *Manual Functions Mapping for VIP2 4A IOSET3* for a definition of the Manual modes.

表 7-11 lists the A_DELAY and G_DELAY values needed to calculate the correct values to be set in the CFG_x registers.

表 7-11. Manual Functions Mapping for VIP2 4A IOSET3

BALL	BALL NAME	VIP2_4A_IOSET3_MANUAL1		VIP2_4A_IOSET3_MANUAL2		CFG REGISTER	MUXMODE
		A_DELAY (ps)	G_DELAY (ps)	A_DELAY (ps)	G_DELAY (ps)		8
E21	gpio6_14	683	0	939	0	CFG_GPIO6_14_IN	vin4a_hsync0
F20	gpio6_15	1065	0	1321	0	CFG_GPIO6_15_IN	vin4a_vsync0
F21	gpio6_16	858	0	1114	0	CFG_GPIO6_16_IN	vin4a_fld0
B14	mcasp1_aclkr	1711	23	1990	0	CFG_MCASP1_ACLKR_IN	vin4a_d0
G13	mcasp1_axr2	2131	1054	2423	1073	CFG_MCASP1_AXR2_IN	vin4a_d2

Copyright © 2015–2019, Texas Instruments Incorporated

表 7-11. Manual Functions Mapping for VIP2 4A IOSET3 (continued)

BALL	BALL NAME	VIP2_4A_IOSET3_MANUAL1		VIP2_4A_IOSET3_MANUAL2		CFG REGISTER	MUXMODE
		A_DELAY (ps)	G_DELAY (ps)	A_DELAY (ps)	G_DELAY (ps)		8
J11	mcasp1_axr3	2267	691	2573	696	CFG_MCASP1_AXR3_IN	vin4a_d3
E12	mcasp1_axr4	2089	813	2441	773	CFG_MCASP1_AXR4_IN	vin4a_d4
F13	mcasp1_axr5	2061	858	2430	799	CFG_MCASP1_AXR5_IN	vin4a_d5
C12	mcasp1_axr6	2151	595	2539	480	CFG_MCASP1_AXR6_IN	vin4a_d6
D12	mcasp1_axr7	2112	931	2421	932	CFG_MCASP1_AXR7_IN	vin4a_d7
J14	mcasp1_fsr	1714	323	2248	44	CFG_MCASP1_FSR_IN	vin4a_d1
E15	mcasp2_aclkr	1462	76	1795	0	CFG_MCASP2_ACLKR_IN	vin4a_d8
B15	mcasp2_axr0	1578	833	2113	554	CFG_MCASP2_AXR0_IN	vin4a_d10
A15	mcasp2_axr1	1785	396	2279	212	CFG_MCASP2_AXR1_IN	vin4a_d11
D15	mcasp2_axr4	1765	485	2299	206	CFG_MCASP2_AXR4_IN	vin4a_d12
B16	mcasp2_axr5	1644	509	2179	230	CFG_MCASP2_AXR5_IN	vin4a_d13
B17	mcasp2_axr6	1098	0	1354	0	CFG_MCASP2_AXR6_IN	vin4a_d14
A17	mcasp2_axr7	1242	521	1777	243	CFG_MCASP2_AXR7_IN	vin4a_d15
A20	mcasp2_fsr	1328	130	1713	0	CFG_MCASP2_FSR_IN	vin4a_d9
C18	mcasp4_aclkx	1033	0	1166	0	CFG_MCASP4_ACLKX_IN	vin4a_d16
G16	mcasp4_axr0	2147	358	2529	221	CFG_MCASP4_AXR0_IN	vin4a_d18
D17	mcasp4_axr1	2140	676	2482	645	CFG_MCASP4_AXR1_IN	vin4a_d19
A21	mcasp4_fsx	2140	339	2554	165	CFG_MCASP4_FSX_IN	vin4a_d17
AA3	mcasp5_aclkx	2846	2620	3059	2547	CFG_MCASP5_ACLKX_IN	vin4a_d20
AB3	mcasp5_axr0	2880	3301	3040	3417	CFG_MCASP5_AXR0_IN	vin4a_d22
AA4	mcasp5_axr1	2851	3586	3042	3593	CFG_MCASP5_AXR1_IN	vin4a_d23
AB9	mcasp5_fsx	2847	2856	3031	2890	CFG_MCASP5_FSX_IN	vin4a_d21
B26	xref_clk2	0	0	0	0	CFG_XREF_CLK2_IN	vin4a_clk0
C23	xref_clk3	927	0	1183	0	CFG_XREF_CLK3_IN	vin4a_de0

Manual IO Timings Modes must be used to ensure some IO timings for VIP2. See 表 7-2 *Modes Summary* for a list of IO timings requiring the use of Manual IO Timings Modes. See 表 7-12 *Manual Functions Mapping for VIP2 4B* for a definition of the Manual modes.

表 7-12 lists the A_DELAY and G_DELAY values needed to calculate the correct values to be set in the CFG_x registers.

Copyright © 2015–2019, Texas Instruments Incorporated

表 7-12. Manual Functions Mapping for VIP2 4B

BALL	BALL NAME	VIP2_4B_MANUAL1		VIP2_4B_MANUAL2		CFG REGISTER	MUXMODE	
		A_DELAY (ps)	G_DELAY (ps)	A_DELAY (ps)	G_DELAY (ps)		5	6
R6	gpmc_a0	1861	901	2102	660	CFG_GPMC_A0_IN	-	vin4b_d0
T9	gpmc_a1	1652	891	1955	583	CFG_GPMC_A1_IN	-	vin4b_d1
N9	gpmc_a10	0	0	0	0	CFG_GPMC_A10_IN	-	vin4b_clk1
P9	gpmc_a11	1783	1178	1975	1021	CFG_GPMC_A11_IN	-	vin4b_de1
P4	gpmc_a12	1903	853	2076	664	CFG_GPMC_A12_IN	-	vin4b_fld1
T6	gpmc_a2	1888	1212	2065	994	CFG_GPMC_A2_IN	-	vin4b_d2
T7	gpmc_a3	1839	1274	2025	1075	CFG_GPMC_A3_IN	-	vin4b_d3
P6	gpmc_a4	1868	1113	2058	869	CFG_GPMC_A4_IN	-	vin4b_d4
R9	gpmc_a5	1757	1079	2028	802	CFG_GPMC_A5_IN	-	vin4b_d5
R5	gpmc_a6	1800	670	2032	421	CFG_GPMC_A6_IN	-	vin4b_d6
P5	gpmc_a7	1967	898	2179	597	CFG_GPMC_A7_IN	-	vin4b_d7
N7	gpmc_a8	1731	959	1993	559	CFG_GPMC_A8_IN	-	vin4b_hsync1
R4	gpmc_a9	1766	1150	2022	834	CFG_GPMC_A9_IN	-	vin4b_vsync1
U4	mdio_d	1602	506	1931	283	CFG_MDIO_D_IN	vin4b_d0	-
V1	mdio_mclk	0	0	0	0	CFG_MDIO_MCLK_IN	vin4b_clk1	-
U5	rgmii0_rxc	1678	887	1987	663	CFG_RGMII0_RXC_IN	vin4b_d5	-
V5	rgmii0_rxctl	1595	932	1903	748	CFG_RGMII0_RXCTL_IN	vin4b_d6	-
W2	rgmii0_rxd0	1707	464	2010	160	CFG_RGMII0_RXD0_IN	vin4b_fld1	-
V4	rgmii0_rxd3	1662	1146	1943	996	CFG_RGMII0_RXD3_IN	vin4b_d7	-
W9	rgmii0_txc	1639	1195	1970	1006	CFG_RGMII0_TXC_IN	vin4b_d3	-
V9	rgmii0_txctl	1695	1226	1952	1113	CFG_RGMII0_TXCTL_IN	vin4b_d4	-
V6	rgmii0_txd1	1693	1118	1951	1003	CFG_RGMII0_TXD1_IN	vin4b_vsync1	-
U7	rgmii0_txd2	1522	1004	1895	685	CFG_RGMII0_TXD2_IN	vin4b_hsync1	-
V7	rgmii0_txd3	1777	957	2018	787	CFG_RGMII0_TXD3_IN	vin4b_de1	-
V2	uart3_rxd	1537	236	1762	0	CFG_UART3_RXD_IN	vin4b_d1	-
Y1	uart3_txd	1575	645	1933	276	CFG_UART3_TXD_IN	vin4b_d2	-

Manual IO Timings Modes must be used to ensure some IO timings for VIP2. See 表 7-2 *Modes Summary* for a list of IO timings requiring the use of Manual IO Timings Modes. See 表 7-13 *Manual Functions Mapping for VIP2 3B IOSET2* for a definition of the Manual modes.

表 7-13 lists the A_DELAY and G_DELAY values needed to calculate the correct values to be set in the CFG_x registers.

表 7-13. Manual Functions Mapping for VIP2 3B IOSET2

BALL	BALL NAME	VIP2_3B_IOSET2_MANUAL1		VIP2_3B_IOSET2_MANUAL2		CFG REGISTER	MUXMODE	
		A_DELAY (ps)	G_DELAY (ps)	A_DELAY (ps)	G_DELAY (ps)		4	6
K7	gpmc_a19	1505	1172	1854	799	CFG_GPMC_A19_IN	vin4a_d12	vin3b_d0
M7	gpmc_a20	1394	1074	1723	716	CFG_GPMC_A20_IN	vin4a_d13	vin3b_d1
J5	gpmc_a21	1452	1266	1789	900	CFG_GPMC_A21_IN	vin4a_d14	vin3b_d2
K6	gpmc_a22	1360	1200	1684	847	CFG_GPMC_A22_IN	vin4a_d15	vin3b_d3
J7	gpmc_a23	1446	735	1831	443	CFG_GPMC_A23_IN	vin4a_fld0	vin3b_d4
J4	gpmc_a24	1329	1360	1686	970	CFG_GPMC_A24_IN	-	vin3b_d5
J6	gpmc_a25	1417	1318	1757	962	CFG_GPMC_A25_IN	-	vin3b_d6
H4	gpmc_a26	1321	1298	1680	880	CFG_GPMC_A26_IN	-	vin3b_d7
H5	gpmc_a27	1309	1215	1669	834	CFG_GPMC_A27_IN	-	vin3b_hsync1
N6	gpmc_ben0	1677	944	1994	638	CFG_GPMC_BEN0_IN	-	vin3b_de1
M4	gpmc_ben1	0	0	0	0	CFG_GPMC_BEN1_IN	vin3b_clk1	vin3b_fld1
H6	gpmc_cs1	1280	1058	1620	664	CFG_GPMC_CS1_IN	vin4a_de0	vin3b_vsync1

Copyright © 2015–2019, Texas Instruments Incorporated

Manual IO Timings Modes must be used to ensure some IO timings for VIP3. See 表 7-2 *Modes Summary* for a list of IO timings requiring the use of Manual IO Timings Modes. See 表 7-14 *Manual Functions Mapping for VIP3* for a definition of the Manual modes.

表 7-14 lists the A_DELAY and G_DELAY values needed to calculate the correct values to be set in the CFG_x registers.

表 7-14. Manual Functions Mapping for VIP3

BALL	BALL NAME	VIP3_MANUAL1		VIP3_MANUAL2		CFG REGISTER	MUXMODE	
		A_DELAY (ps)	G_DELAY (ps)	A_DELAY (ps)	G_DELAY (ps)		7	9
AC5	gpio6_10	774	2462	765	2551	CFG_GPIO6_10_IN	-	vin5a_clk0
AB4	gpio6_11	2453	3000	2863	2719	CFG_GPIO6_11_IN	-	vin5a_de0
C14	mcasp1_aclkx	1400	154	1698	0	CFG_MCASP1_ACLKX_IN	vin6a_fld0	-
G12	mcasp1_axr0	2055	612	2459	381	CFG_MCASP1_AXR0_IN	vin6a_vsync0	-
F12	mcasp1_axr1	1623	338	2098	0	CFG_MCASP1_AXR1_IN	vin6a_hsync0	-
B13	mcasp1_axr10	1625	92	1681	0	CFG_MCASP1_AXR10_IN	vin6a_d13	-
A12	mcasp1_axr11	1509	714	2048	317	CFG_MCASP1_AXR11_IN	vin6a_d12	-
E14	mcasp1_axr12	1189	619	1729	222	CFG_MCASP1_AXR12_IN	vin6a_d11	-
A13	mcasp1_axr13	1546	265	1954	0	CFG_MCASP1_AXR13_IN	vin6a_d10	-
G14	mcasp1_axr14	1305	0	1448	0	CFG_MCASP1_AXR14_IN	vin6a_d9	-
F14	mcasp1_axr15	1342	313	1798	0	CFG_MCASP1_AXR15_IN	vin6a_d8	-
B12	mcasp1_axr8	1833	466	2264	0	CFG_MCASP1_AXR8_IN	vin6a_d15	-
A11	mcasp1_axr9	1555	777	2029	352	CFG_MCASP1_AXR9_IN	vin6a_d14	-
D14	mcasp1_fsx	1549	281	1972	0	CFG_MCASP1_FSX_IN	vin6a_de0	-
A19	mcasp2_aclkx	1063	0	1206	0	CFG_MCASP2_ACLKX_IN	vin6a_d7	-
C15	mcasp2_axr2	1134	0	1277	0	CFG_MCASP2_AXR2_IN	vin6a_d5	-
A16	mcasp2_axr3	1348	487	1888	90	CFG_MCASP2_AXR3_IN	vin6a_d4	-
A18	mcasp2_fsx	1030	250	1424	0	CFG_MCASP2_FSX_IN	vin6a_d6	-
B18	mcasp3_aclkx	0	0	0	0	CFG_MCASP3_ACLKX_IN	vin6a_d3	-
B19	mcasp3_axr0	888	485	1428	88	CFG_MCASP3_AXR0_IN	vin6a_d1	-
C17	mcasp3_axr1	861	582	1331	254	CFG_MCASP3_AXR1_IN	vin6a_d0	vin5a_fld0
F15	mcasp3_fsx	1093	451	1633	54	CFG_MCASP3_FSX_IN	vin6a_d2	-
C18	mcasp4_aclkx	557	0	541	0	CFG_MCASP4_ACLKX_IN	-	vin5a_d15
G16	mcasp4_axr0	1027	989	1441	644	CFG_MCASP4_AXR0_IN	-	vin5a_d13
D17	mcasp4_axr1	1140	1038	1601	740	CFG_MCASP4_AXR1_IN	-	vin5a_d12
A21	mcasp4_fsx	1140	885	700	1377	CFG_MCASP4_FSX_IN	-	vin5a_d14
AA3	mcasp5_aclkx	1633	3030	1658	2999	CFG_MCASP5_ACLKX_IN	-	vin5a_d11
AB3	mcasp5_axr0	2392	3028	2816	2711	CFG_MCASP5_AXR0_IN	-	vin5a_d9
AA4	mcasp5_axr1	2435	3026	2856	2723	CFG_MCASP5_AXR1_IN	-	vin5a_d8
AB9	mcasp5_fsx	2285	2660	2713	2288	CFG_MCASP5_FSX_IN	-	vin5a_d10
AD4	mmc3_clk	2501	2822	2915	2475	CFG_MMC3_CLK_IN	-	vin5a_d7
AC4	mmc3_cmd	2423	2826	2832	2485	CFG_MMC3_CMD_IN	-	vin5a_d6
AC7	mmc3_dat0	2336	2820	2743	2526	CFG_MMC3_DAT0_IN	-	vin5a_d5
AC6	mmc3_dat1	2332	2710	2749	2346	CFG_MMC3_DAT1_IN	-	vin5a_d4
AC9	mmc3_dat2	1732	3048	1811	3012	CFG_MMC3_DAT2_IN	-	vin5a_d3
AC3	mmc3_dat3	2459	2969	2872	2683	CFG_MMC3_DAT3_IN	-	vin5a_d2
AC8	mmc3_dat4	2436	2662	2836	2271	CFG_MMC3_DAT4_IN	-	vin5a_d1
AD6	mmc3_dat5	2450	2431	1771	3271	CFG_MMC3_DAT5_IN	-	vin5a_d0
AB8	mmc3_dat6	2332	2640	2752	2255	CFG_MMC3_DAT6_IN	-	vin5a_hsync0
AB5	mmc3_dat7	1799	2927	1881	2844	CFG_MMC3_DAT7_IN	-	vin5a_vsync0

Copyright © 2015–2019, Texas Instruments Incorporated

表 7-14. Manual Functions Mapping for VIP3 (continued)

BALL	BALL NAME	VIP3_MANUAL1		VIP3_MANUAL2		CFG REGISTER	MUXMODE	
		A_DELAY (ps)	G_DELAY (ps)	A_DELAY (ps)	G_DELAY (ps)		7	9
D18	xref_clk0	681	0	824	0	CFG_XREF_CLK0_IN	vin6a_d0	-
E17	xref_clk1	21	0	0	0	CFG_XREF_CLK1_IN	vin6a_clk0	-

7.7 Display Subsystem – Video Output Ports

Three Display Parallel Interfaces (DPI) channels are available in DSS named DPI Video Output 1, DPI Video Output 2 and DPI Video Output 3.

注: The DPI Video Output i (i = 1 to 3) interface is also referred to as VOUTi.

Every VOUT interface consists of:

- 24-bit data bus (data[23:0])
- Horizontal synchronization signal (HSYNC)
- Vertical synchronization signal (VSYNC)
- Data enable (DE)
- Field ID (FID)
- Pixel clock (CLK)

注: For more information, see the Display Subsystem chapter of the Device TRM.

注意

The IO timings provided in this section are only valid if signals within a single IOSET are used. The IOSETs are defined in the 表 7-19 and 表 7-20.

注意

The IO Timings provided in this section are only valid for some DSS usage modes when the corresponding Virtual IO Timings or Manual IO Timings are configured as described in the tables found in this section.

注意

All pads/balls configured as vouti_* signals are recommended to use slow slew rate by setting the corresponding CTRL_CORE_PAD_*[SLEWCONTROL] register field to SLOW (0b1). FAST slew setting is allowed, but results in faster edge rates on the VOUTn bus, higher power/ground noise, and higher EMI emissions compared to SLOW slew rate.

表 7-15, 表 7-16 and 図 7-6 assume testing over the recommended operating conditions and electrical characteristic conditions

.

Copyright © 2015–2019, Texas Instruments Incorporated

表 7-15. DPI Video Output i (i = 1..3) Default Switching Characteristics

NO.	PARAMETER	DESCRIPTION	MODE	MIN	MAX	UNIT
D1	$t_{c(clk)}$	Cycle time, output pixel clock vouti_clk		11.76 (2)		ns
D2	$t_{w(clkL)}$	Pulse duration, output pixel clock vouti_clk low	DPI1, DPI2 (IOSET1), DPI3	P*0.5-1 (1)		ns
			DPI2 (IOSET2)	P*0.5-1.35 (1)		ns
D3	$t_{w(clkH)}$	Pulse duration, output pixel clock vouti_clk high	DPI1, DPI2 (IOSET1), DPI3	P*0.5-1 (1)		ns
			DPI2 (IOSET2)	P*0.5-1.35 (1)		ns
D5	$t_{d(clk-dV)}$	Delay time, output pixel clock vouti_clk transition to output data vouti_d[23:0] valid	DPI1	-2.5	2.5	ns
			DPI2 (IOSET1)	-2.5	2.5	ns
			DPI2 (IOSET2)	-2.5	2.5	ns
			DPI3 (IOSET1)	-2.5	2.5	ns
			DPI3 (IOSET2/3)	-2.5	2.5	ns
D6	$t_{d(clk-ctlV)}$	Delay time, output pixel clock vouti_clk transition to output control signals vouti_vsync, vouti_hsync, vouti_de, and vouti_fld valid	DPI1	-2.5	2.5	ns
			DPI2 (IOSET1)	-2.5	2.5	ns
			DPI2 (IOSET2)	-2.5	2.5	ns
			DPI3 (IOSET1)	-2.5	2.5	ns
			DPI3 (IOSET2/3)	-2.5	2.5	ns

(1) P = output vouti_clk period in ns.

(2) All pads/balls configured as vouti_* signals are recommended to use slow slew rate by setting the corresponding CTRL_CORE_PAD_*[SLEWCONTROL] register field to SLOW (0b1). FAST slew setting is allowed, but results in faster edge rates on the VOUTn bus, higher power/ground noise, and higher EMI emissions compared to SLOW slew rate.

(3) SERDES transceivers may be sensitive to the jitter profile of vouti_clk. A clock jitter cleaner such as the CDCE813 may be needed to meet the required jitter masks of the SERDES transceiver. See Application Note **SPRAC62** for general reference on a similar device with the same interface.

表 7-16. DPI Video Output i (i = 1..3) Alternate Switching Characteristics

NO.	PARAMETER	DESCRIPTION	MODE	MIN	MAX	UNIT
D1	$t_{c(clk)}$	Cycle time, output pixel clock vouti_clk		6.06 (2)		ns
D2	$t_{w(clkL)}$	Pulse duration, output pixel clock vouti_clk low		P*0.5-1 (1)		ns
D3	$t_{w(clkH)}$	Pulse duration, output pixel clock vouti_clk high		P*0.5-1 (1)		ns
D5	$t_{d(clk-ctlV)}$	Delay time, output pixel clock vouti_clk transition to output data vouti_d[23:0] valid	DPI1	1.51	4.55	ns
			DPI2 (IOSET1)	1.51	4.55	ns
			DPI2 (IOSET2)	1.51	4.55	ns
			DPI3	1.51	4.55	ns
D6	$t_{d(clk-dV)}$	Delay time, output pixel clock vouti_clk transition to output control signals vouti_vsync, vouti_hsync, vouti_de, and vouti_fld valid	DPI1	1.51	4.55	ns
			DPI2 (IOSET1)	1.51	4.55	ns
			DPI2 (IOSET2)	1.51	4.55	ns
			DPI3	1.51	4.55	ns

(1) P = output vouti_clk period in ns.

(2) All pads/balls configured as vouti_* signals are recommended to use slow slew rate by setting the corresponding CTRL_CORE_PAD_*[SLEWCONTROL] register field to SLOW (0b1). FAST slew setting is allowed, but results in faster edge rates on the VOUTn bus, higher power/ground noise, and higher EMI emissions compared to SLOW slew rate.

(3) SERDES transceivers may be sensitive to the jitter profile of vouti_clk. A clock jitter cleaner such as the CDCE813 may be needed to meet the required jitter masks of the SERDES transceiver. See Application Note **SPRAC62** for general reference on a similar device with the same interface.

表 7-17. DPI Video Output i (i = 1..3) MANUAL3 Switching Characteristics

NO.	PARAMETER	DESCRIPTION	MODE	MIN	MAX	UNIT
D1	$t_{c(clk)}$	Cycle time, output pixel clock vouti_clk		6.06 (2)		ns
D2	$t_{w(clkL)}$	Pulse duration, output pixel clock vouti_clk low		P*0.5-1 (1)		ns
D3	$t_{w(clkH)}$	Pulse duration, output pixel clock vouti_clk high		P*0.5-1 (1)		ns
D5	$t_{d(clk-ctlV)}$	Delay time, output pixel clock vouti_clk transition to output data vouti_d[23:0] valid	DPI1	2.85	5.56	ns
			DPI2, DPI3	2.78	5.91	ns
D6	$t_{d(clk-dV)}$	Delay time, output pixel clock vouti_clk transition to output control signals vouti_vsync, vouti_hsync, vouti_de, and vouti_fld valid	DPI1	2.85	5.56	ns
			DPI2, DPI3	2.78	5.91	ns

(1) P = output vouti_clk period in ns.

(2) SERDES transceivers may be sensitive to the jitter profile of vouti_clk. A clock jitter cleaner such as the CDCE813 may be needed to meet the required jitter masks of the SERDES transceiver. See Application Note **SPRAC62** for general reference on a similar device with the same interface.

表 7-18. DPI Video Output i (i = 1..3) MANUAL4 Switching Characteristics

NO.	PARAMETER	DESCRIPTION	MODE	MIN	MAX	UNIT
D1	$t_{c(clk)}$	Cycle time, output pixel clock vouti_clk		6.06 (2)		ns
D2	$t_{w(clkL)}$	Pulse duration, output pixel clock vouti_clk low		P*0.5-1 (1)		ns
D3	$t_{w(clkH)}$	Pulse duration, output pixel clock vouti_clk high		P*0.5-1 (1)		ns
D5	$t_{d(clk-ctlV)}$	Delay time, output pixel clock vouti_clk transition to output data vouti_d[23:0] valid	DPI1, DPI2, DPI3	3.55	6.61	ns
D6	$t_{d(clk-dV)}$	Delay time, output pixel clock vouti_clk transition to output control signals vouti_vsync, vouti_hsync, vouti_de, and vouti_fld valid	DPI1, DPI2, DPI3	3.55	6.61	ns

Copyright © 2015–2019, Texas Instruments Incorporated

(1) P = output vouti_clk period in ns.

(2) SERDES transceivers may be sensitive to the jitter profile of vouti_clk. A clock jitter cleaner such as the CDCE813 may be needed to meet the required jitter masks of the SERDES transceiver. See Application Note **SPRAC62** for general reference on a similar device with the same interface.

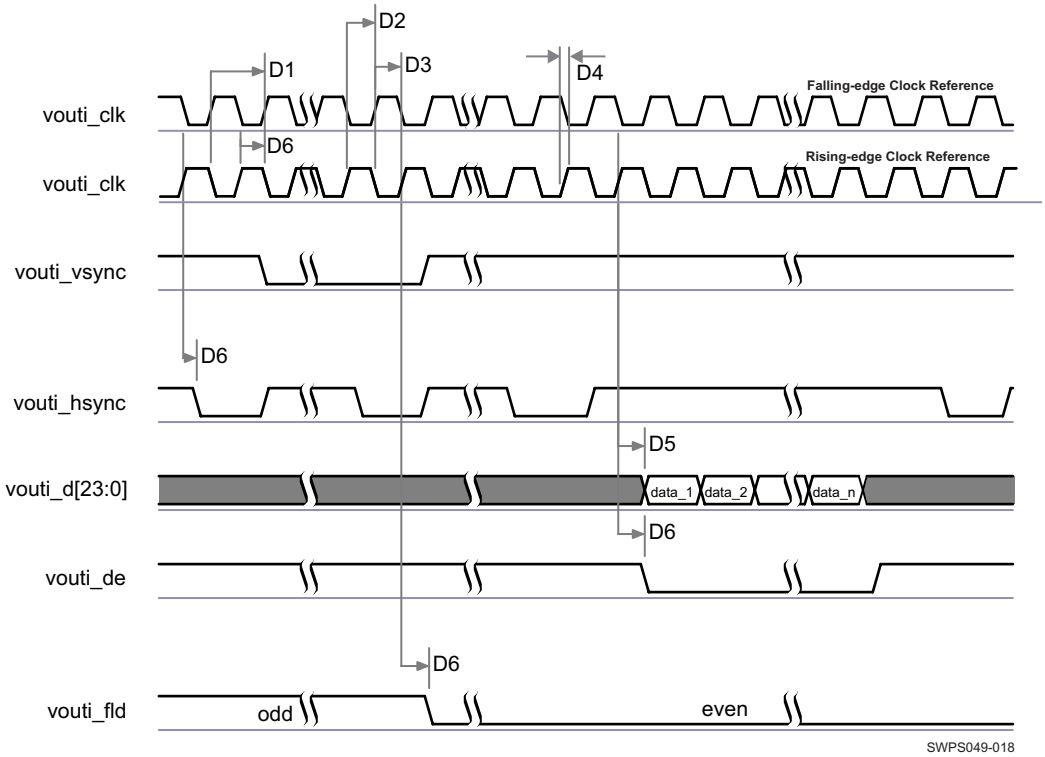

図 7-6. DPI Video Output(1)(2)(3)

(1) The configuration of assertion of the data can be programmed on the falling or rising edge of the pixel clock.

(2) The polarity and the pulse width of vouti_hsync and vouti_vsync are programmable, refer to the DSS section of the device TRM.

(3) The vouti_clk frequency can be configured, refer to the DSS section of the device TRM.

注: To configure the desired virtual mode the user must set MODESELECT bit and DELAYMODE bitfield for each corresponding pad control register.

The pad control registers are presented in 表 4-3 and described in Control Module chapter of the Device TRM.

In 表 7-19 are presented the specific groupings of signals (IOSET) for use with VOUT2.

表 7-19. VOUT2 IOSETs

SIGNALS	IOSET1		IOSET2	
	BALL	MUX	BALL	MUX
vout2_d23	F2	4	AA4	6
vout2_d22	F3	4	AB3	6
vout2_d21	D1	4	AB9	6
vout2_d20	E2	4	AA3	6
vout2_d19	D2	4	D17	6
vout2_d18	F4	4	G16	6
vout2_d17	C1	4	A21	6
vout2_d16	E4	4	C18	6

表 7-19. VOUT2 IOSETs (continued)

SIGNALS	IOSET1		IOSET2	
	BALL	MUX	BALL	MUX
vout2_d15	F5	4	A17	6
vout2_d14	E6	4	B17	6
vout2_d13	D3	4	B16	6
vout2_d12	F6	4	D15	6
vout2_d11	D5	4	A15	6
vout2_d10	C2	4	B15	6
vout2_d9	C3	4	A20	6
vout2_d8	C4	4	E15	6
vout2_d7	B2	4	D12	6
vout2_d6	D6	4	C12	6
vout2_d5	C5	4	F13	6
vout2_d4	A3	4	E12	6
vout2_d3	B3	4	J11	6
vout2_d2	B4	4	G13	6
vout2_d1	B5	4	J14	6
vout2_d0	A4	4	B14	6
vout2_vsync	G6	4	F20	6
vout2_hsync	G1	4	E21	6
vout2_clk	H7	4	B26	6
vout2_fld	E1	4	F21	6
vout2_de	G2	4	C23	6

In 表 7-20 are presented the specific groupings of signals (IOSET) for use with VOUT3.

表 7-20. VOUT3 IOSETs

SIGNALS	IOSET1		IOSET2 (1)		IOSET3 (1)	
	BALL	MUX	BALL	MUX	BALL	MUX
vout3_d23	P5	3	AE8	4		
vout3_d22	R5	3	AD8	4		
vout3_d21	R9	3	AG7	4		
vout3_d20	P6	3	AH6	4		
vout3_d19	T7	3	AH3	4		
vout3_d18	T6	3	AH5	4		
vout3_d17	T9	3	AG6	4	AD9	3
vout3_d16	R6	3	AH4	4	AG8	3
vout3_d15	H3	3	AG4	4	AG4	4
vout3_d14	H2	3	AG2	4	AG2	4
vout3_d13	J3	3	AG3	4	AG3	4
vout3_d12	H1	3	AG5	4	AG5	4
vout3_d11	J2	3	AF2	4	AF2	4
vout3_d10	J1	3	AF6	4	AF6	4
vout3_d9	K2	3	AF3	4	AF3	4
vout3_d8	L1	3	AF4	4	AF4	4
vout3_d7	L2	3	AF1	4	AE8	3
vout3_d6	L3	3	AE3	4	AD8	3
vout3_d5	L4	3	AE5	4	AG7	3
vout3_d4	L6	3	AE1	4	AH6	3

Copyright © 2015–2019, Texas Instruments Incorporated

表 7-20. VOUT3 IOSETs (continued)

SIGNALS	IOSET1		IOSET2 (1)		IOSET3 (1)	
	BALL	MUX	BALL	MUX	BALL	MUX
vout3_d3	M1	3	AE2	4	AH3	3
vout3_d2	L5	3	AE6	4	AH5	3
vout3_d1	M2	3	AD2	4	AG6	3
vout3_d0	M6	3	AD3	4	AH4	3
vout3_de	N9	3	AD9	4		
vout3_vsync	R4	3	AF8	4	AF8	4
vout3_clk	P1	3	AF9	4	AF9	4
vout3_hsync	N7	3	AE9	4	AE9	4
vout3_fld	P9	3	AG8	4		

(1) The VOUT3 interface when multiplexed onto balls mapped to the VDDSHV6 supply rail is restricted to operating in 1.8V mode only (VDDSHV6 must be supplied with 1.8V). 3.3V mode is not supported. This must be considered in the pin mux programming and VDDSHVx supply connections.

注: To configure the desired Manual IO Timing Mode the user must follow the steps described in section Manual IO Timing Modes of the Device TRM.

The associated registers to configure are listed in the **CFG REGISTER** column. For more information see the Control Module chapter in the Device TRM.

Manual IO Timings Modes must be used to ensure some IO timings for VOUT1. See 表 7-2 *Modes Summary* for a list of IO timings requiring the use of Manual IO Timings Modes. See 表 7-21 *Manual Functions Mapping for DSS VOUT1* for a definition of the Manual modes.

表 7-21 lists the A_DELAY and G_DELAY values needed to calculate the correct values to be set in the CFG_x registers.

表 7-21. Manual Functions Mapping for DSS VOUT1

BALL	BALL NAME	VOUT1_MANUAL1		VOUT1_MANUAL2		VOUT1_MANUAL3		VOUT1_MANUAL4		CFG REGISTER	MUXMODE
		A_DELAY (ps)	G_DELAY (ps)	A_DELAY (ps)	G_DELAY (ps)	A_DELAY (ps)	G_DELAY (ps)	A_DELAY (ps)	G_DELAY (ps)		0
D11	vout1_clk	0	706	1126	751	0	466	0	466	CFG_VOUT1_CLK_OUT	vout1_clk
F11	vout1_d0	2313	0	395	0	3436	0	4306	0	CFG_VOUT1_D0_OUT	vout1_d0
G10	vout1_d1	2439	0	521	0	3562	0	4432	0	CFG_VOUT1_D1_OUT	vout1_d1
D7	vout1_d10	2199	0	282	0	3323	0	3993	0	CFG_VOUT1_D10_OUT	vout1_d10
D8	vout1_d11	2266	0	348	0	3390	0	4060	0	CFG_VOUT1_D11_OUT	vout1_d11
A5	vout1_d12	3159	0	1240	0	4281	0	4951	0	CFG_VOUT1_D12_OUT	vout1_d12
C6	vout1_d13	2100	0	182	0	3223	0	4093	0	CFG_VOUT1_D13_OUT	vout1_d13
C8	vout1_d14	2229	0	311	0	3353	0	4223	0	CFG_VOUT1_D14_OUT	vout1_d14
C7	vout1_d15	2202	0	285	0	3326	0	4196	0	CFG_VOUT1_D15_OUT	vout1_d15
B7	vout1_d16	2084	0	166	0	3208	0	4078	0	CFG_VOUT1_D16_OUT	vout1_d16
B8	vout1_d17	2195	0	278	0	3319	0	4189	0	CFG_VOUT1_D17_OUT	vout1_d17
A7	vout1_d18	2342	0	425	0	3466	0	4136	0	CFG_VOUT1_D18_OUT	vout1_d18
A8	vout1_d19	2463	0	516	0	3557	0	4227	0	CFG_VOUT1_D19_OUT	vout1_d19
F10	vout1_d2	2200	0	282	0	3324	0	4194	0	CFG_VOUT1_D2_OUT	vout1_d2
C9	vout1_d20	2304	0	386	0	3428	0	4298	0	CFG_VOUT1_D20_OUT	vout1_d20
A9	vout1_d21	2103	0	111	0	3193	0	4063	0	CFG_VOUT1_D21_OUT	vout1_d21
B9	vout1_d22	2145	0	227	0	3268	0	4138	0	CFG_VOUT1_D22_OUT	vout1_d22
A10	vout1_d23	1932	0	0	0	3039	0	3909	0	CFG_VOUT1_D23_OUT	vout1_d23
G11	vout1_d3	2355	0	438	0	3479	0	4349	0	CFG_VOUT1_D3_OUT	vout1_d3
E9	vout1_d4	3215	0	1298	0	4339	0	5209	0	CFG_VOUT1_D4_OUT	vout1_d4
F9	vout1_d5	2314	0	397	0	3438	0	4308	0	CFG_VOUT1_D5_OUT	vout1_d5
F8	vout1_d6	2238	0	321	0	3362	0	4082	0	CFG_VOUT1_D6_OUT	vout1_d6
E7	vout1_d7	2381	0	155	309	3505	0	4175	0	CFG_VOUT1_D7_OUT	vout1_d7
E8	vout1_d8	2138	0	212	0	3253	0	4123	0	CFG_VOUT1_D8_OUT	vout1_d8
D9	vout1_d9	2383	0	466	0	3507	0	4377	0	CFG_VOUT1_D9_OUT	vout1_d9
B10	vout1_de	1984	0	0	0	3085	0	3955	0	CFG_VOUT1_DE_OUT	vout1_de
B11	vout1_fld	2265	0	236	0	3337	0	4207	0	CFG_VOUT1_FLD_OUT	vout1_fld
C11	vout1_hsync	1947	0	0	0	3052	0	3922	0	CFG_VOUT1_HSYNC_OUT	vout1_hsync
E11	vout1_vsync	2739	0	139	701	3863	0	4733	0	CFG_VOUT1_VSYNC_OUT	vout1_vsync

Copyright © 2015–2019, Texas Instruments Incorporated

Manual IO Timings Modes must be used to ensure some IO timings for VOUT2. See 表 7-2 *Modes Summary* for a list of IO timings requiring the use of Manual IO Timings Modes. See 表 7-22 *Manual Functions Mapping for DSS VOUT2* for a definition of the Manual modes.

表 7-22 lists the A_DELAY and G_DELAY values needed to calculate the correct values to be set in the CFG_x registers.

表 7-22. Manual Functions Mapping for DSS VOUT2 IOSET1

BALL	BALL NAME	VOUT2_IOSET1_MANUAL 1		VOUT2_IOSET1_MANUAL 2		VOUT2_IOSET1_MANUAL 3		VOUT2_IOSET1_MANUAL 4		CFG REGISTER	MUXMODE
		A_DELAY (ps)	G_DELAY (ps)	A_DELAY (ps)	G_DELAY (ps)	A_DELAY (ps)	G_DELAY (ps)	A_DELAY (ps)	G_DELAY (ps)		4
E1	vin2a_clk0	2718	0	819	0	3794	0	4664	0	CFG_VIN2A_CLK0_OUT	vout2_fld
F2	vin2a_d0	2680	0	485	296	3757	0	4627	0	CFG_VIN2A_D0_OUT	vout2_d23
F3	vin2a_d1	2633	0	733	0	3710	0	4580	0	CFG_VIN2A_D1_OUT	vout2_d22
D3	vin2a_d10	1867	0	0	0	2954	0	3824	0	CFG_VIN2A_D10_OUT	vout2_d13
F6	vin2a_d11	2457	0	431	127	3534	0	4404	0	CFG_VIN2A_D11_OUT	vout2_d12
D5	vin2a_d12	2683	1016	1286	514	3628	648	4498	648	CFG_VIN2A_D12_OUT	vout2_d11
C2	vin2a_d13	2629	985	1229	486	3569	622	4439	622	CFG_VIN2A_D13_OUT	vout2_d10
C3	vin2a_d14	2531	804	1126	309	3460	452	4530	452	CFG_VIN2A_D14_OUT	vout2_d9
C4	vin2a_d15	2624	818	1227	315	3567	452	4537	452	CFG_VIN2A_D15_OUT	vout2_d8
B2	vin2a_d16	2747	767	1357	256	3704	386	4574	386	CFG_VIN2A_D16_OUT	vout2_d7
D6	vin2a_d17	2622	841	1226	337	3616	474	4686	474	CFG_VIN2A_D17_OUT	vout2_d6
C5	vin2a_d18	2328	0	430	0	3406	0	4276	0	CFG_VIN2A_D18_OUT	vout2_d5
A3	vin2a_d19	2300	0	401	0	3427	0	4197	0	CFG_VIN2A_D19_OUT	vout2_d4
D1	vin2a_d2	2452	0	446	106	3528	0	4398	0	CFG_VIN2A_D2_OUT	vout2_d21
B3	vin2a_d20	1998	0	98	0	3075	0	3845	0	CFG_VIN2A_D20_OUT	vout2_d3
B4	vin2a_d21	1953	0	54	0	3030	0	3900	0	CFG_VIN2A_D21_OUT	vout2_d2
B5	vin2a_d22	1893	0	0	0	3030	0	3900	0	CFG_VIN2A_D22_OUT	vout2_d1
A4	vin2a_d23	1936	0	36	0	3013	0	3883	0	CFG_VIN2A_D23_OUT	vout2_d0
E2	vin2a_d3	2494	0	595	0	3571	0	4441	0	CFG_VIN2A_D3_OUT	vout2_d20
D2	vin2a_d4	3001	153	1254	0	4231	0	4901	0	CFG_VIN2A_D4_OUT	vout2_d19
F4	vin2a_d5	2463	0	563	0	3539	0	4409	0	CFG_VIN2A_D5_OUT	vout2_d18
C1	vin2a_d6	2456	0	558	0	3334	0	4404	0	CFG_VIN2A_D6_OUT	vout2_d17
E4	vin2a_d7	2431	0	532	0	3509	0	4379	0	CFG_VIN2A_D7_OUT	vout2_d16
F5	vin2a_d8	2262	0	363	0	3340	0	4210	0	CFG_VIN2A_D8_OUT	vout2_d15
E6	vin2a_d9	2145	0	246	0	3222	0	4092	0	CFG_VIN2A_D9_OUT	vout2_d14
G2	vin2a_de0	2597	0	550	149	3675	0	4545	0	CFG_VIN2A_DE0_OUT	vout2_de
H7	vin2a_fld0	0	957	1208	969	0	686	0	686	CFG_VIN2A_FLD0_OUT	vout2_clk

Copyright © 2015–2019, Texas Instruments Incorporated

表 7-22. Manual Functions Mapping for DSS VOUT2 IOSET1 (continued)

BALL	BALL NAME	VOUT2_IOSET1_MANUAL 1		VOUT2_IOSET1_MANUAL 2		VOUT2_IOSET1_MANUAL 3		VOUT2_IOSET1_MANUAL 4		CFG REGISTER	MUXMODE
		A_DELAY (ps)	G_DELAY (ps)	A_DELAY (ps)	G_DELAY (ps)	A_DELAY (ps)	G_DELAY (ps)	A_DELAY (ps)	G_DELAY (ps)		4
G1	vin2a_hsync0	2958	0	1059	0	4035	0	4905	0	CFG_VIN2A_HSYNC0_OUT	vout2_hsync
G6	vin2a_vsync0	2752	0	853	0	3829	0	4699	0	CFG_VIN2A_VSYNC0_OUT	vout2_vsync

Manual IO Timings Modes must be used to ensure some IO timings for VOUT2. See 表 7-2 *Modes Summary* for a list of IO timings requiring the use of Manual IO Timings Modes. See 表 7-23 *Manual Functions Mapping for DSS VOUT2 IOSET2* for a definition of the Manual modes.

表 7-23 lists the A_DELAY and G_DELAY values needed to calculate the correct values to be set in the CFG_x registers.

表 7-23. Manual Functions Mapping for DSS VOUT2 IOSET2

BALL	BALL NAME	VOUT2_IOSET2_MANUAL 1		VOUT2_IOSET2_MANUAL 2		VOUT2_IOSET2_MANUAL 3		VOUT2_IOSET2_MANUAL 4		CFG REGISTER	MUXMODE
		A_DELAY (ps)	G_DELAY (ps)	A_DELAY (ps)	G_DELAY (ps)	A_DELAY (ps)	G_DELAY (ps)	A_DELAY (ps)	G_DELAY (ps)		6
E21	gpio6_14	1547	30	0	0	2298	0	3168	0	CFG_GPIO6_14_OUT	vout2_hsync
F20	gpio6_15	1773	31	209	0	2484	0	3354	0	CFG_GPIO6_15_OUT	vout2_vsync
F21	gpio6_16	1547	27	33	0	2345	0	3215	0	CFG_GPIO6_16_OUT	vout2_fld
B14	mcasp1_aclkr	3738	2	2636	0	4925	0	5795	0	CFG_MCASP1_ACLKR_OUT	vout2_d0
G13	mcasp1_axr2	2846	4	1730	0	4003	0	4873	0	CFG_MCASP1_AXR2_OUT	vout2_d2
J11	mcasp1_axr3	2831	17	1498	0	3771	0	4541	0	CFG_MCASP1_AXR3_OUT	vout2_d3
E12	mcasp1_axr4	3009	5	1879	0	4152	0	5022	0	CFG_MCASP1_AXR4_OUT	vout2_d4
F13	mcasp1_axr5	3009	9	1802	0	4075	0	4945	0	CFG_MCASP1_AXR5_OUT	vout2_d5
C12	mcasp1_axr6	2875	2	1792	0	4065	0	4935	0	CFG_MCASP1_AXR6_OUT	vout2_d6
D12	mcasp1_axr7	2893	7	1717	0	3991	0	4861	0	CFG_MCASP1_AXR7_OUT	vout2_d7
J14	mcasp1_fsr	2729	13	1466	0	3739	0	4609	0	CFG_MCASP1_FSR_OUT	vout2_d1
E15	mcasp2_aclkr	3753	13	2488	0	4761	0	5631	0	CFG_MCASP2_ACLKR_OUT	vout2_d8

Copyright © 2015–2019, Texas Instruments Incorporated

表 7-23. Manual Functions Mapping for DSS VOUT2 IOSET2 (continued)

BALL	BALL NAME	VOUT2_IOSET2_MANUAL 1		VOUT2_IOSET2_MANUAL 2		VOUT2_IOSET2_MANUAL 3		VOUT2_IOSET2_MANUAL 4		CFG REGISTER	MUXMODE
		A_DELAY (ps)	G_DELAY (ps)	A_DELAY (ps)	G_DELAY (ps)	A_DELAY (ps)	G_DELAY (ps)	A_DELAY (ps)	G_DELAY (ps)		6
B15	mcasp2_axr0	2182	6	1022	0	3294	0	4164	0	CFG_MCASP2_AXR0_OUT	vout2_d10
A15	mcasp2_axr1	2324	5	1179	0	3452	0	4322	0	CFG_MCASP2_AXR1_OUT	vout2_d11
D15	mcasp2_axr4	2434	0	1374	0	3647	0	4517	0	CFG_MCASP2_AXR4_OUT	vout2_d12
B16	mcasp2_axr5	2287	4	1164	0	3437	0	4307	0	CFG_MCASP2_AXR5_OUT	vout2_d13
B17	mcasp2_axr6	3598	13	2339	0	4599	0	5469	0	CFG_MCASP2_AXR6_OUT	vout2_d14
A17	mcasp2_axr7	2231	15	931	0	3204	0	4074	0	CFG_MCASP2_AXR7_OUT	vout2_d15
A20	mcasp2_fsr	1944	11	715	0	2988	0	3858	0	CFG_MCASP2_FSR_OUT	vout2_d9
C18	mcasp4_aclkx	3241	8	2051	0	4324	0	5194	0	CFG_MCASP4_ACLKX_OUT	vout2_d16
G16	mcasp4_axr0	2236	22	830	0	3090	0	3960	0	CFG_MCASP4_AXR0_OUT	vout2_d18
D17	mcasp4_axr1	1803	16	505	0	2766	0	3636	0	CFG_MCASP4_AXR1_OUT	vout2_d19
A21	mcasp4_fsx	1901	19	541	0	2801	0	3671	0	CFG_MCASP4_FSX_OUT	vout2_d17
AA3	mcasp5_aclkx	4582	2178	3499	1978	6020	1755	6890	1755	CFG_MCASP5_ACLKX_OUT	vout2_d20
AB3	mcasp5_axr0	4628	1604	3505	1402	6025	1178	6895	1178	CFG_MCASP5_AXR0_OUT	vout2_d22
AA4	mcasp5_axr1	4757	1237	3457	1063	5987	806	6857	806	CFG_MCASP5_AXR1_OUT	vout2_d23
AB9	mcasp5_fsx	4683	1485	3443	1280	5961	1059	6831	1059	CFG_MCASP5_FSX_OUT	vout2_d21
B26	xref_clk2	0	850	1900	1150	0	730	0	730	CFG_XREF_CLK2_OUT	vout2_clk
C23	xref_clk3	3075	19	1752	0	4012	0	4882	0	CFG_XREF_CLK3_OUT	vout2_de

Manual IO Timings Modes must be used to ensure some IO timings for VOUT3. See 表 7-2 *Modes Summary* for a list of IO timings requiring the use of Manual IO Timings Modes. See 表 7-24 *Manual Functions Mapping for DSS VOUT3* for a definition of the Manual modes.

表 7-24 lists the A_DELAY and G_DELAY values needed to calculate the correct values to be set in the CFG_x registers.

表 7-24. Manual Functions Mapping for DSS VOUT3

BALL	BALL NAME	VOUT3_MANUAL1		VOUT3_MANUAL2		VOUT3_MANUAL3		VOUT3_MANUAL4		CFG REGISTER	MUXMODE	
		A_DELAY (ps)	G_DELAY (ps)	A_DELAY (ps)	G_DELAY (ps)	A_DELAY (ps)	G_DELAY (ps)	A_DELAY (ps)	G_DELAY (ps)		3	4
R6	gpmc_a0	3069	0	565	267	3365	0	4235	0	CFG_GPMC_A0_OUT	vout3_d16	-
T9	gpmc_a1	2888	0	650	0	3183	0	4053	0	CFG_GPMC_A1_OUT	vout3_d17	-
N9	gpmc_a10	3595	0	1157	0	3690	0	4560	0	CFG_GPMC_A10_OUT	vout3_de	-
P9	gpmc_a11	3891	14	669	970	4170	0	5040	0	CFG_GPMC_A11_OUT	vout3_fld	-
T6	gpmc_a2	2934	0	705	0	3238	0	4108	0	CFG_GPMC_A2_OUT	vout3_d18	-
T7	gpmc_a3	3944	4	1521	0	4054	0	4924	0	CFG_GPMC_A3_OUT	vout3_d19	-
P6	gpmc_a4	4456	261	1837	0	4370	0	5240	0	CFG_GPMC_A4_OUT	vout3_d20	-
R9	gpmc_a5	2915	0	739	0	3273	0	4143	0	CFG_GPMC_A5_OUT	vout3_d21	-
R5	gpmc_a6	3192	0	937	0	3471	0	4341	0	CFG_GPMC_A6_OUT	vout3_d22	-
P5	gpmc_a7	3182	0	944	0	3477	0	4347	0	CFG_GPMC_A7_OUT	vout3_d23	-
N7	gpmc_a8	4124	75	1843	0	4375	0	5245	0	CFG_GPMC_A8_OUT	vout3_hsync	-
R4	gpmc_a9	4252	0	998	0	3530	0	4400	0	CFG_GPMC_A9_OUT	vout3_vsync	-
M6	gpmc_ad0	3501	52	1151	0	3684	0	4534	0	CFG_GPMC_AD0_OUT	vout3_d0	-
M2	gpmc_ad1	3163	0	956	0	3489	0	4339	0	CFG_GPMC_AD1_OUT	vout3_d1	-
J1	gpmc_ad10	3130	0	1064	0	3598	0	4148	0	CFG_GPMC_AD10_OUT	vout3_d10	-
J2	gpmc_ad11	2821	0	809	0	3344	0	3894	0	CFG_GPMC_AD11_OUT	vout3_d11	-
H1	gpmc_ad12	3290	0	1161	0	3694	0	4244	0	CFG_GPMC_AD12_OUT	vout3_d12	-
J3	gpmc_ad13	2573	0	524	0	3058	0	3908	0	CFG_GPMC_AD13_OUT	vout3_d13	-
H2	gpmc_ad14	2540	0	632	0	3165	0	3715	0	CFG_GPMC_AD14_OUT	vout3_d14	-
H3	gpmc_ad15	3181	0	1012	0	3545	0	4295	0	CFG_GPMC_AD15_OUT	vout3_d15	-
L5	gpmc_ad2	3550	45	1222	0	3756	0	4506	0	CFG_GPMC_AD2_OUT	vout3_d2	-
M1	gpmc_ad3	2922	0	875	0	3408	0	4158	0	CFG_GPMC_AD3_OUT	vout3_d3	-
L6	gpmc_ad4	3463	36	1170	0	3703	0	4453	0	CFG_GPMC_AD4_OUT	vout3_d4	-
L4	gpmc_ad5	2299	17	358	0	2930	0	3780	0	CFG_GPMC_AD5_OUT	vout3_d5	-
L3	gpmc_ad6	3346	0	1184	0	3717	0	4267	0	CFG_GPMC_AD6_OUT	vout3_d6	-
L2	gpmc_ad7	2971	0	908	0	3441	0	3991	0	CFG_GPMC_AD7_OUT	vout3_d7	-
L1	gpmc_ad8	874	234	0	0	1923	0	2873	0	CFG_GPMC_AD8_OUT	vout3_d8	-
K2	gpmc_ad9	1160	221	0	0	2402	0	3252	0	CFG_GPMC_AD9_OUT	vout3_d9	-
P1	gpmc_cs3	0	600	1505	1379	0	947	0	947	CFG_GPMC_CS3_OUT	vout3_clk	-
AG8	vin1a_clk0	2670	0	1280	0	3511	0	4381	0	CFG_VIN1A_CLK0_OUT	vout3_d16	vout3_fld
AE8	vin1a_d0	2750	196	1286	0	3820	0	4690	0	CFG_VIN1A_D0_OUT	vout3_d7	vout3_d23
AD8	vin1a_d1	2409	240	1282	0	3816	0	4686	0	CFG_VIN1A_D1_OUT	vout3_d6	vout3_d22

Copyright © 2015–2019, Texas Instruments Incorporated

表 7-24. Manual Functions Mapping for DSS VOUT3 (continued)

BALL	BALL NAME	VOUT3_MANUAL1		VOUT3_MANUAL2		VOUT3_MANUAL3		VOUT3_MANUAL4		CFG REGISTER	MUXMODE	
		A_DELAY (ps)	G_DELAY (ps)	A_DELAY (ps)	G_DELAY (ps)	A_DELAY (ps)	G_DELAY (ps)	A_DELAY (ps)	G_DELAY (ps)		3	4
AG3	vin1a_d10	3026	270	1038	622	4228	0	5098	0	CFG_VIN1A_D10_OUT	-	vout3_d13
AG5	vin1a_d11	2711	203	1141	0	3867	0	4737	0	CFG_VIN1A_D11_OUT	-	vout3_d12
AF2	vin1a_d12	2924	539	1154	0	4422	0	5292	0	CFG_VIN1A_D12_OUT	-	vout3_d11
AF6	vin1a_d13	2861	235	1339	0	3815	0	4685	0	CFG_VIN1A_D13_OUT	-	vout3_d10
AF3	vin1a_d14	3176	377	892	0	4559	0	5429	0	CFG_VIN1A_D14_OUT	-	vout3_d9
AF4	vin1a_d15	2806	232	1221	89	3755	0	4625	0	CFG_VIN1A_D15_OUT	-	vout3_d8
AF1	vin1a_d16	2402	396	692	0	3873	0	4743	0	CFG_VIN1A_D16_OUT	-	vout3_d7
AE3	vin1a_d17	2132	374	353	0	3860	0	4730	0	CFG_VIN1A_D17_OUT	-	vout3_d6
AE5	vin1a_d18	2547	284	1109	0	3857	0	4727	0	CFG_VIN1A_D18_OUT	-	vout3_d5
AE1	vin1a_d19	2095	575	640	180	3929	0	4799	0	CFG_VIN1A_D19_OUT	-	vout3_d4
AG7	vin1a_d2	2546	189	1273	0	3806	0	4476	0	CFG_VIN1A_D2_OUT	vout3_d5	vout3_d21
AE2	vin1a_d20	1825	735	628	0	3552	0	4622	0	CFG_VIN1A_D20_OUT	-	vout3_d3
AE6	vin1a_d21	2720	210	1322	0	4021	0	4891	0	CFG_VIN1A_D21_OUT	-	vout3_d2
AD2	vin1a_d22	2361	413	746	0	3659	0	4729	0	CFG_VIN1A_D22_OUT	-	vout3_d1
AD3	vin1a_d23	2731	273	1547	0	3775	0	4845	0	CFG_VIN1A_D23_OUT	-	vout3_d0
AH6	vin1a_d3	2534	219	1357	0	3890	0	4760	0	CFG_VIN1A_D3_OUT	vout3_d4	vout3_d20
AH3	vin1a_d4	3015	538	2033	19	4585	0	5455	0	CFG_VIN1A_D4_OUT	vout3_d3	vout3_d19
AH5	vin1a_d5	2451	237	1039	0	3572	0	4442	0	CFG_VIN1A_D5_OUT	vout3_d2	vout3_d18
AG6	vin1a_d6	2505	191	1230	0	3763	0	4433	0	CFG_VIN1A_D6_OUT	vout3_d1	vout3_d17
AH4	vin1a_d7	2550	170	1235	0	3768	0	4638	0	CFG_VIN1A_D7_OUT	vout3_d0	vout3_d16
AG4	vin1a_d8	2847	285	1219	0	3850	0	4720	0	CFG_VIN1A_D8_OUT	-	vout3_d15
AG2	vin1a_d9	2857	247	1113	256	3900	0	4770	0	CFG_VIN1A_D9_OUT	-	vout3_d14
AD9	vin1a_de0	3164	0	1494	0	3728	0	4848	0	CFG_VIN1A_DE0_OUT	vout3_d17	vout3_de
AF9	vin1a_fld0	0	1100	1718	869	261	384	261	384	CFG_VIN1A_FLD0_OUT	-	vout3_clk
AE9	vin1a_hsync0	3171	41	1439	0	3798	0	4668	0	CFG_VIN1A_HSYNC0_OUT	-	vout3_hsync
AF8	vin1a_vsync0	2956	110	1268	88	3610	0	4480	0	CFG_VIN1A_VSYNC0_OUT	-	vout3_vsync

Copyright © 2015–2019, Texas Instruments Incorporated

7.8 Display Subsystem – High-Definition Multimedia Interface (HDMI)

The High-Definition Multimedia Interface is provided for transmitting digital television audiovisual signals from DVD players, set-top boxes and other audiovisual sources to television sets, projectors and other video displays. The HDMI interface is aligned with the HDMI TMDS single stream standard v1.4a (720p @60Hz to 1080p @24Hz) and the HDMI v1.3 (1080p @60Hz): 3 data channels, plus 1 clock channel is supported (differential).

注: For more information, see the High-Definition Multimedia Interface section of the device TRM.

7.9 External Memory Interface (EMIF)

The device has a dedicated interface to DDR3 SDRAM. It supports JEDEC standard compliant DDR3 SDRAM devices with the following features:

- 16-bit or 32-bit data path to external SDRAM memory
- Memory device capacity: 128Mb, 256Mb, 512Mb, 1Gb, 2Gb, 4Gb and 8Gb devices (Single die only)
- One interface with associated DDR3 PHYs

注: For more information, see the EMIF Controller section of the Device TRM.

7.10 General-Purpose Memory Controller (GPMC)

The GPMC is the unified memory controller that interfaces external memory devices such as:

- Asynchronous SRAM-like memories and ASIC devices
- Asynchronous page mode and synchronous burst NOR flash
- NAND flash

注: For more information, see the General-Purpose Memory Controller section of the Device TRM.

7.10.1 GPMC/NOR Flash Interface Synchronous Timing

注意

The IO Timings provided in this section are only valid for some GPMC usage modes when the corresponding Virtual IO Timings or Manual IO Timings are configured as described in the tables found in this section.

表 7-25 and 表 7-26 assume testing over the recommended operating conditions and electrical characteristic conditions below (see 図 7-7, 図 7-8, 図 7-9, 図 7-10, 図 7-11, and 図 7-12).

表 7-25. GPMC/NOR Flash Interface Timing Requirements - Synchronous Mode - Default

NO.	PARAMETER	DESCRIPTION	MIN	MAX	UNIT
F12	$t_{su(dV-clkH)}$	Setup time, read gpmc_ad[15:0] valid before gpmc_clk high	2.69		ns
F13	$t_{h(clkH-dV)}$	Hold time, read gpmc_ad[15:0] valid after gpmc_clk high	1.53		ns
F21	$t_{su(waitV-clkH)}$	Setup time, gpmc_wait[1:0] valid before gpmc_clk high	2.23		ns
F22	$t_{h(clkH-waitV)}$	Hold Time, gpmc_wait[1:0] valid after gpmc_clk high	1.52		ns

Copyright © 2015–2019, Texas Instruments Incorporated

注: Wait monitoring support is limited to a WaitMonitoringTime value > 0. For a full description of wait monitoring feature, see General-Purpose Memory Controller section in the Device TRM.

表 7-26. GPMC/NOR Flash Interface Switching Characteristics - Synchronous Mode - Default

NO.	PARAMETER	DESCRIPTION	MIN	MAX	UNIT
F0	$t_{c(clk)}$	Cycle time, output clock gpmc_clk period	11.3		ns
F2	$t_{d(clkH-nCSV)}$	Delay time, gpmc_clk rising edge to gpmc_cs[7:0] transition	F-1.48(6)	F+3.84(6)	ns
F3	$t_{d(clkH-nCSIV)}$	Delay time, gpmc_clk rising edge to gpmc_cs[7:0] invalid	E-1.48(5)	E +3.84(5)	ns
F4	$t_{d(ADDV-clk)}$	Delay time, gpmc_a[27:0] address bus valid to gpmc_clk first edge	B-1.69(2)	B+3.76(2)	ns
F5	$t_{d(clkH-ADDIV)}$	Delay time, gpmc_clk rising edge to gpmc_a[27:0] gpmc address bus invalid	-1.69		ns
F6	$t_{d(nBEV-clk)}$	Delay time, gpmc_ben[1:0] valid to gpmc_clk rising edge	B-3.8(2)	B+2.37(2)	ns
F7	$t_{d(clkH-nBEIV)}$	Delay time, gpmc_clk rising edge to gpmc_ben[1:0] invalid	D-0.4(4)	D+1.1(4)	ns
F8	$t_{d(clkH-nADV)}$	Delay time, gpmc_clk rising edge to gpmc_advn_ale transition	G-1.48 (7)	G+3.84 (7)	ns
F9	$t_{d(clkH-nADVIV)}$	Delay time, gpmc_clk rising edge to gpmc_advn_ale invalid	D-1.48 (4)	G+3.84 (7)	ns
F10	$t_{d(clkH-nOE)}$	Delay time, gpmc_clk rising edge to gpmc_oen_ren transition	H-1.41 (8)	H+2.45 (8)	ns
F11	$t_{d(clkH-nOEIV)}$	Delay time, gpmc_clk rising edge to gpmc_oen_ren invalid	E-1.41 (5)	E+2.1 (5)	ns
F14	$t_{d(clkH-nWE)}$	Delay time, gpmc_clk rising edge to gpmc_wen transition	I-1.18 (9)	I+3.68 (9)	ns
F15	$t_{d(clkH-Data)}$	Delay time, gpmc_clk rising edge to gpmc_ad[15:0] data bus transition	J-1.89 (10)	J+4.89 (10)	ns
F17	$t_{d(clkH-nBE)}$	Delay time, gpmc_clk rising edge to gpmc_ben[1:0] transition	J-1.3 (10)	J+3.8 (10)	ns
F18	$t_{w(nCSV)}$	Pulse duration, gpmc_cs[7:0] low	A (1)		ns
F19	$t_{w(nBEV)}$	Pulse duration, gpmc_ben[1:0] low	C (3)		ns
F20	$t_{w(nADVV)}$	Pulse duration, gpmc_advn_ale low	K (11)		ns
F23	$t_{d(CLK-GPIO)}$	Delay time, gpmc_clk transition to gpio6_16.clkout1 transition	1.2	6.1	ns

表 7-27. GPMC/NOR Flash Interface Timing Requirements - Synchronous Mode - Alternate

NO.	PARAMETER	DESCRIPTION	MIN	MAX	UNIT
F12	$t_{su(dV-clkH)}$	Setup time, read gpmc_ad[15:0] valid before gpmc_clk high	3.56		ns
F13	$t_{h(clkH-dV)}$	Hold time, read gpmc_ad[15:0] valid after gpmc_clk high	1.9		ns
F21	$t_{su(waitV-clkH)}$	Setup time, gpmc_wait[1:0] valid before gpmc_clk high	3.1		ns
F22	$t_{h(clkH-waitV)}$	Hold Time, gpmc_wait[1:0] valid after gpmc_clk high	1.9		ns

表 7-28. GPMC/NOR Flash Interface Switching Characteristics - Synchronous Mode - Alternate

NO.	PARAMETER	DESCRIPTION	MIN	MAX	UNIT
F0	$t_{c(clk)}$	Cycle time, output clock gpmc_clk period (12)	15.04		ns
F2	$t_{d(clkH-nCSV)}$	Delay time, gpmc_clk rising edge to gpmc_cs[7:0] transition	F-0.84 (6)	F+6.73 (6)	ns
F3	$t_{d(clkH-nCSIV)}$	Delay time, gpmc_clk rising edge to gpmc_cs[7:0] invalid	E-0.84 (5)	E+6.73 (5)	ns
F4	$t_{d(ADDV-clk)}$	Delay time, gpmc_a[27:0] address bus valid to gpmc_clk first edge	B-1.36 (2)	B+6.73 (2)	ns
F5	$t_{d(clkH-ADDIV)}$	Delay time, gpmc_clk rising edge to gpmc_a[27:0] gpmc address bus invalid	-1.36		ns
F6	$t_{d(nBEV-clk)}$	Delay time, gpmc_ben[1:0] valid to gpmc_clk rising edge	B-6.34 (2)	B+0.6 (2)	ns
F7	$t_{d(clkH-nBEIV)}$	Delay time, gpmc_clk rising edge to gpmc_ben[1:0] invalid	D-0.4 (4)	D+4.9 (4)	ns

表 7-28. GPMC/NOR Flash Interface Switching Characteristics - Synchronous Mode - Alternate (continued)

NO.	PARAMETER	DESCRIPTION	MIN	MAX	UNIT
F8	$t_{d(clkH-nADV)}$	Delay time, gpmc_clk rising edge to gpmc_advn_ale transition	G-0.67 (7)	G+6.1 (7)	ns
F9	$t_{d(clkH-nADVIV)}$	Delay time, gpmc_clk rising edge to gpmc_advn_ale invalid	D-0.67 (4)	D+6.1 (4)	ns
F10	$t_{d(clkH-nOE)}$	Delay time, gpmc_clk rising edge to gpmc_oen_ren transition	H-0.67 (8)	H+5.65 (8)	ns
F11	$t_{d(clkH-nOEIV)}$	Delay time, gpmc_clk rising edge to gpmc_oen_ren invalid	E-0.67 (5)	E+5.65 (5)	ns
F14	$t_{d(clkH-nWE)}$	Delay time, gpmc_clk rising edge to gpmc_wen transition	I-0.6 (9)	I+6.1 (9)	ns
F15	$t_{d(clkH-Data)}$	Delay time, gpmc_clk rising edge to gpmc_ad[15:0] data bus transition	J-1.76 (10)	J+6.39 (10)	ns
F17	$t_{d(clkH-nBE)}$	Delay time, gpmc_clk rising edge to gpmc_ben[1:0] transition	J-0.6 (10)	J+6.34 (10)	ns
F18	$t_{w(nCSV)}$	Pulse duration, gpmc_cs[7:0] low	A (10)		ns
F19	$t_{w(nBEV)}$	Pulse duration, gpmc_ben[1:0] low	C (3)		ns
F20	$t_{w(nADVV)}$	Pulse duration, gpmc_advn_ale low	K (11)		ns
F23	$t_{d(CLK-GPIO)}$	Delay time, gpmc_clk transition to gpio6_16.clkout1 transition (13)	0.96	6.1	ns

(1) For single read: A = (CSRdOffTime - CSOnTime) * (TimeParaGranularity + 1) * GPMC_FCLK period
For burst read: A = (CSRdOffTime - CSOnTime + (n - 1) * PageBurstAccessTime) * (TimeParaGranularity + 1) * GPMC_FCLK period
For burst write: A = (CSWrOffTime - CSOnTime + (n - 1) * PageBurstAccessTime) * (TimeParaGranularity + 1) * GPMC_FCLK period with n the page burst access number.

(2) B = ClkActivationTime * GPMC_FCLK

(3) For single read: C = RdCycleTime * (TimeParaGranularity + 1) * GPMC_FCLK
For burst read: C = (RdCycleTime + (n – 1) * PageBurstAccessTime) * (TimeParaGranularity + 1) * GPMC_FCLK
For Burst write: C = (WrCycleTime + (n – 1) * PageBurstAccessTime) * (TimeParaGranularity + 1) * GPMC_FCLK with n the page burst access number.

(4) For single read: D = (RdCycleTime – AccessTime) * (TimeParaGranularity + 1) * GPMC_FCLK
For burst read: D = (RdCycleTime – AccessTime) * (TimeParaGranularity + 1) * GPMC_FCLK
For burst write: D = (WrCycleTime – AccessTime) * (TimeParaGranularity + 1) * GPMC_FCLK

(5) For single read: E = (CSRdOffTime – AccessTime) * (TimeParaGranularity + 1) * GPMC_FCLK
For burst read: E = (CSRdOffTime – AccessTime) * (TimeParaGranularity + 1) * GPMC_FCLK
For burst write: E = (CSWrOffTime – AccessTime) * (TimeParaGranularity + 1) * GPMC_FCLK

(6) For nCS falling edge (CS activated):
Case GpmcFCLKDivider = 0 :
F = 0.5 * CSExtraDelay * GPMC_FCLK Case GpmcFCLKDivider = 1:
F = 0.5 * CSExtraDelay * GPMC_FCLK if (ClkActivationTime and CSOnTime are odd) or (ClkActivationTime and CSOnTime are even)
F = (1 + 0.5 * CSExtraDelay) * GPMC_FCLK otherwise
Case GpmcFCLKDivider = 2:
F = 0.5 * CSExtraDelay * GPMC_FCLK if ((CSOnTime – ClkActivationTime) is a multiple of 3)
F = (1 + 0.5 * CSExtraDelay) * GPMC_FCLK if ((CSOnTime – ClkActivationTime – 1) is a multiple of 3)
F = (2 + 0.5 * CSExtraDelay) * GPMC_FCLK if ((CSOnTime – ClkActivationTime – 2) is a multiple of 3)
Case GpmcFCLKDivider = 3:
F = 0.5 * CSExtraDelay * GPMC_FCLK if ((CSOnTime - ClkActivationTime) is a multiple of 4)
F = (1 + 0.5 * CSExtraDelay) * GPMC_FCLK if ((CSOnTime - ClkActivationTime - 1) is a multiple of 4)
F = (2 + 0.5 * CSExtraDelay) * GPMC_FCLK if ((CSOnTime - ClkActivationTime - 2) is a multiple of 4)
F = (3 + 0.5 * CSExtraDelay) * GPMC_FCLK if ((CSOnTime - ClkActivationTime - 3) is a multiple of 4)

(7) For ADV falling edge (ADV activated):
Case GpmcFCLKDivider = 0 :
G = 0.5 * ADVExtraDelay * GPMC_FCLK
Case GpmcFCLKDivider = 1:
G = 0.5 * ADVExtraDelay * GPMC_FCLK if (ClkActivationTime and ADVOnTime are odd) or (ClkActivationTime and ADVOnTime are even)
G = (1 + 0.5 * ADVExtraDelay) * GPMC_FCLK otherwise
Case GpmcFCLKDivider = 2:

Copyright © 2015–2019, Texas Instruments Incorporated

G = 0.5 * ADVExtraDelay * GPMC_FCLK if ((ADVOnTime – ClkActivationTime) is a multiple of 3)
G = (1 + 0.5 * ADVExtraDelay) * GPMC_FCLK if ((ADVOnTime – ClkActivationTime – 1) is a multiple of 3)
G = (2 + 0.5 * ADVExtraDelay) * GPMC_FCLK if ((ADVOnTime – ClkActivationTime – 2) is a multiple of 3)
For ADV rising edge (ADV deactivated) in Reading mode:
Case GpmcFCLKDivider = 0:
G = 0.5 * ADVExtraDelay * GPMC_FCLK
Case GpmcFCLKDivider = 1:
G = 0.5 * ADVExtraDelay * GPMC_FCLK if (ClkActivationTime and ADVRdOffTime are odd) or (ClkActivationTime and ADVRdOffTime are even)
G = (1 + 0.5 * ADVExtraDelay) * GPMC_FCLK otherwise
Case GpmcFCLKDivider = 2:
G = 0.5 * ADVExtraDelay * GPMC_FCLK if ((ADVRdOffTime – ClkActivationTime) is a multiple of 3)
G = (1 + 0.5 * ADVExtraDelay) * GPMC_FCLK if ((ADVRdOffTime – ClkActivationTime – 1) is a multiple of 3)
G = (2 + 0.5 * ADVExtraDelay) * GPMC_FCLK if ((ADVRdOffTime – ClkActivationTime – 2) is a multiple of 3)
Case GpmcFCLKDivider = 3:
G = 0.5 * ADVExtraDelay * GPMC_FCLK if ((ADVRdOffTime – ClkActivationTime) is a multiple of 4)
G = (1 + 0.5 * ADVExtraDelay) * GPMC_FCLK if ((ADVRdOffTime – ClkActivationTime – 1) is a multiple of 4)
G = (2 + 0.5 * ADVExtraDelay) * GPMC_FCLK if ((ADVRdOffTime – ClkActivationTime – 2) is a multiple of 4)
G = (3 + 0.5 * ADVExtraDelay) * GPMC_FCLK if ((ADVRdOffTime – ClkActivationTime – 3) is a multiple of 4)
For ADV rising edge (ADV deactivated) in Writing mode:
Case GpmcFCLKDivider = 0:
G = 0.5 * ADVExtraDelay * GPMC_FCLK
Case GpmcFCLKDivider = 1:
G = 0.5 * ADVExtraDelay * GPMC_FCLK if (ClkActivationTime and ADVWrOffTime are odd) or (ClkActivationTime and ADVWrOffTime are even)
G = (1 + 0.5 * ADVExtraDelay) * GPMC_FCLK otherwise
Case GpmcFCLKDivider = 2:
G = 0.5 * ADVExtraDelay * GPMC_FCLK if ((ADVWrOffTime – ClkActivationTime) is a multiple of 3)
G = (1 + 0.5 * ADVExtraDelay) * GPMC_FCLK if ((ADVWrOffTime – ClkActivationTime – 1) is a multiple of 3)
G = (2 + 0.5 * ADVExtraDelay) * GPMC_FCLK if ((ADVWrOffTime – ClkActivationTime – 2) is a multiple of 3)
Case GpmcFCLKDivider = 3:
G = 0.5 * ADVExtraDelay * GPMC_FCLK if ((ADVWrOffTime – ClkActivationTime) is a multiple of 4)
G = (1 + 0.5 * ADVExtraDelay) * GPMC_FCLK if ((ADVWrOffTime – ClkActivationTime – 1) is a multiple of 4)
G = (2 + 0.5 * ADVExtraDelay) * GPMC_FCLK if ((ADVWrOffTime – ClkActivationTime – 2) is a multiple of 4)
G = (3 + 0.5 * ADVExtraDelay) * GPMC_FCLK if ((ADVWrOffTime – ClkActivationTime – 3) is a multiple of 4)

(8) For OE falling edge (OE activated):
Case GpmcFCLKDivider = 0:
- H = 0.5 * OEExtraDelay * GPMC_FCLK
Case GpmcFCLKDivider = 1:
- H = 0.5 * OEExtraDelay * GPMC_FCLK if (ClkActivationTime and OEOnTime are odd) or (ClkActivationTime and OEOnTime are even)
- H = (1 + 0.5 * OEExtraDelay) * GPMC_FCLK otherwise
Case GpmcFCLKDivider = 2:
- H = 0.5 * OEExtraDelay * GPMC_FCLK if ((OEOnTime – ClkActivationTime) is a multiple of 3)
- H = (1 + 0.5 * OEExtraDelay) * GPMC_FCLK if ((OEOnTime – ClkActivationTime – 1) is a multiple of 3)
- H = (2 + 0.5 * OEExtraDelay) * GPMC_FCLK if ((OEOnTime – ClkActivationTime – 2) is a multiple of 3)
Case GpmcFCLKDivider = 3:
- H = 0.5 * OEExtraDelay * GPMC_FCLK if ((OEOnTime - ClkActivationTime) is a multiple of 4)
- H = (1 + 0.5 * OEExtraDelay) * GPMC_FCLK if ((OEOnTime - ClkActivationTime - 1) is a multiple of 4)
- H = (2 + 0.5 * OEExtraDelay) * GPMC_FCLK if ((OEOnTime - ClkActivationTime - 2) is a multiple of 4)
- H = (3 + 0.5 * OEExtraDelay)) * GPMC_FCLK if ((OEOnTime - ClkActivationTime - 3) is a multiple of 4)
For OE rising edge (OE deactivated):
Case GpmcFCLKDivider = 0:
- H = 0.5 * OEExtraDelay * GPMC_FCLK
Case GpmcFCLKDivider = 1:
- H = 0.5 * OEExtraDelay * GPMC_FCLK if (ClkActivationTime and OEOffTime are odd) or (ClkActivationTime and OEOffTime are even)
- H = (1 + 0.5 * OEExtraDelay) * GPMC_FCLK otherwise
Case GpmcFCLKDivider = 2:

- H = 0.5 * OEExtraDelay * GPMC_FCLK if ((OEOffTime – ClkActivationTime) is a multiple of 3)
- H = (1 + 0.5 * OEExtraDelay) * GPMC_FCLK if ((OEOffTime – ClkActivationTime – 1) is a multiple of 3)
- H = (2 + 0.5 * OEExtraDelay) * GPMC_FCLK if ((OEOffTime – ClkActivationTime – 2) is a multiple of 3)

Case GpmcFCLKDivider = 3:

- H = 0.5 * OEExtraDelay * GPMC_FCLK if ((OEOffTime – ClkActivationTime) is a multiple of 4)
- H = (1 + 0.5 * OEExtraDelay) * GPMC_FCLK if ((OEOffTime – ClkActivationTime – 1) is a multiple of 4)
- H = (2 + 0.5 * OEExtraDelay) * GPMC_FCLK if ((OEOffTime – ClkActivationTime – 2) is a multiple of 4)
- H = (3 + 0.5 * OEExtraDelay) * GPMC_FCLK if ((OEOffTime – ClkActivationTime – 3) is a multiple of 4)

(9) For WE falling edge (WE activated):

Case GpmcFCLKDivider = 0:

- I = 0.5 * WEExtraDelay * GPMC_FCLK

Case GpmcFCLKDivider = 1:

- I = 0.5 * WEExtraDelay * GPMC_FCLK if (ClkActivationTime and WEOnTime are odd) or (ClkActivationTime and WEOnTime are even)
- I = (1 + 0.5 * WEExtraDelay) * GPMC_FCLK otherwise

Case GpmcFCLKDivider = 2:

- I = 0.5 * WEExtraDelay * GPMC_FCLK if ((WEOnTime – ClkActivationTime) is a multiple of 3)
- I = (1 + 0.5 * WEExtraDelay) * GPMC_FCLK if ((WEOnTime – ClkActivationTime – 1) is a multiple of 3)
- I = (2 + 0.5 * WEExtraDelay) * GPMC_FCLK if ((WEOnTime – ClkActivationTime – 2) is a multiple of 3)

Case GpmcFCLKDivider = 3:

- I = 0.5 * WEExtraDelay * GPMC_FCLK if ((WEOnTime - ClkActivationTime) is a multiple of 4)
- I = (1 + 0.5 * WEExtraDelay) * GPMC_FCLK if ((WEOnTime - ClkActivationTime - 1) is a multiple of 4)
- I = (2 + 0.5 * WEExtraDelay) * GPMC_FCLK if ((WEOnTime - ClkActivationTime - 2) is a multiple of 4)
- I = (3 + 0.5 * WEExtraDelay) * GPMC_FCLK if ((WEOnTime - ClkActivationTime - 3) is a multiple of 4)

For WE rising edge (WE deactivated):

Case GpmcFCLKDivider = 0:

- I = 0.5 * WEExtraDelay * GPMC_FCLK

Case GpmcFCLKDivider = 1:

- I = 0.5 * WEExtraDelay * GPMC_FCLK if (ClkActivationTime and WEOffTime are odd) or (ClkActivationTime and WEOffTime are even)
- I = (1 + 0.5 * WEExtraDelay) * GPMC_FCLK otherwise

Case GpmcFCLKDivider = 2:

- I = 0.5 * WEExtraDelay * GPMC_FCLK if ((WEOffTime – ClkActivationTime) is a multiple of 3)
- I = (1 + 0.5 * WEExtraDelay) * GPMC_FCLK if ((WEOffTime – ClkActivationTime – 1) is a multiple of 3)
- I = (2 + 0.5 * WEExtraDelay) * GPMC_FCLK if ((WEOffTime – ClkActivationTime – 2) is a multiple of 3)

Case GpmcFCLKDivider = 3:

- I = 0.5 * WEExtraDelay * GPMC_FCLK if ((WEOffTime - ClkActivationTime) is a multiple of 4)
- I = (1 + 0.5 * WEExtraDelay) * GPMC_FCLK if ((WEOffTime - ClkActivationTime - 1) is a multiple of 4)
- I = (2 + 0.5 * WEExtraDelay) * GPMC_FCLK if ((WEOffTime - ClkActivationTime - 2) is a multiple of 4)
- I = (3 + 0.5 * WEExtraDelay) * GPMC_FCLK if ((WEOffTime - ClkActivationTime - 3) is a multiple of 4)

(10) J = GPMC_FCLK period, where GPMC_FCLK is the General Purpose Memory Controller internal functional clock

(11) For read:

K = (ADVRdOffTime – ADVOnTime) * (TimeParaGranularity + 1) * GPMC_FCLK

For write: K = (ADVWrOffTime – ADVOnTime) * (TimeParaGranularity + 1) * GPMC_FCLK

(12) The gpmc_clk output clock maximum and minimum frequency is programmable in the I/F module by setting the GPMC_CONFIG1_CSx configuration register bit fields GpmcFCLKDivider

(13) gpio6_16 programmed to MUXMODE=9 (clkout1), CM_CLKSEL_CLKOUTMUX1 programmed to 7 (CORE_DPLL_OUT_DCLK), CM_CLKSEL_CORE_DPLL_OUT_CLK_CLKOUTMUX programmed to 1.

(14) CSEXTRADELAY = 0, ADVEXTRADELAY = 0, WEEXTRADELAY = 0, OEEXTRADELAY = 0. Extra half-GPMC_FCLK cycle delay mode is not timed.

Copyright © 2015–2019, Texas Instruments Incorporated

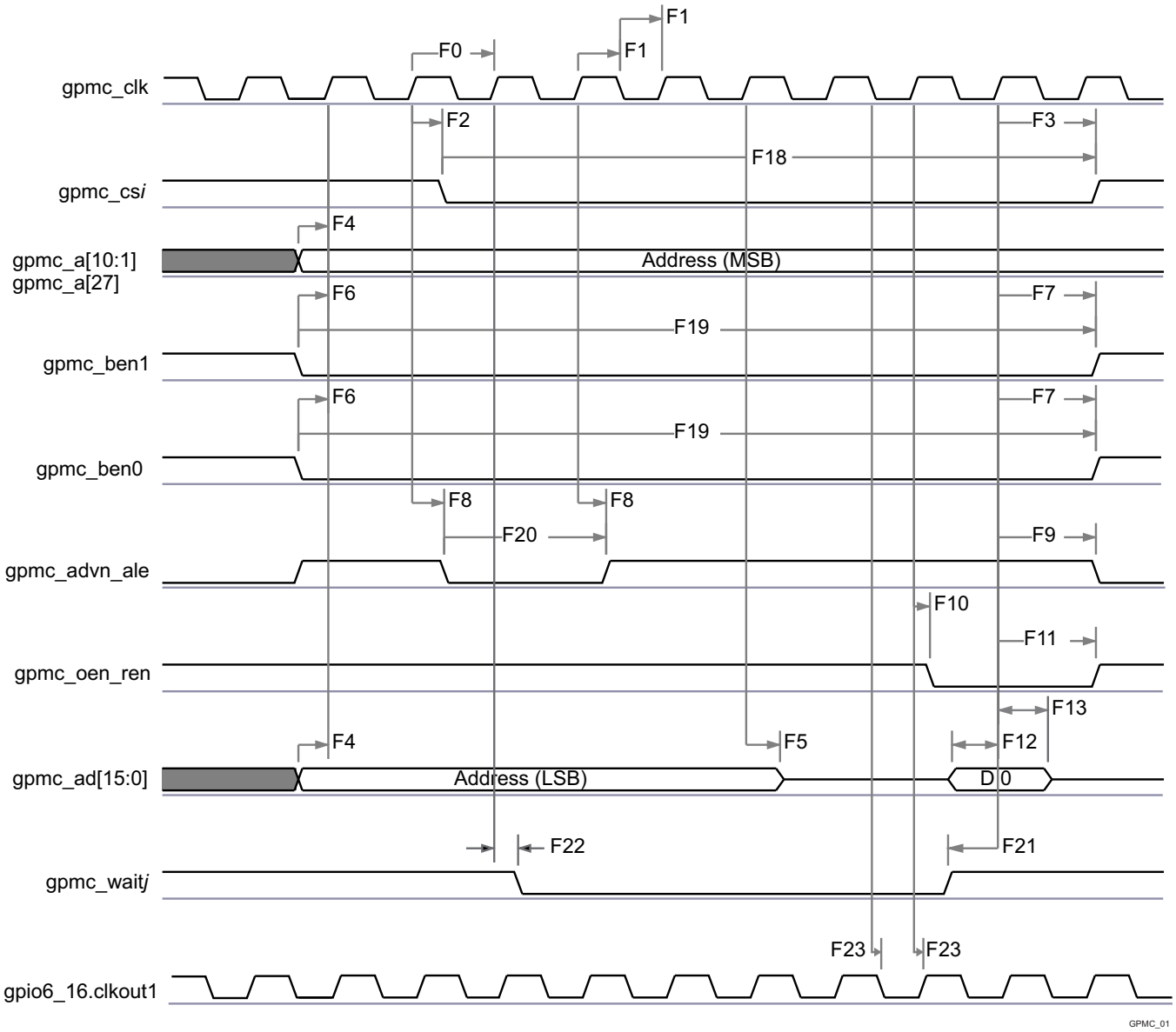

図 7-7. GPMC / Multiplexed 16bits NOR Flash - Synchronous Single Read - (GpmcFCLKDivider = 0)[(1)(2)]

(1) In gpmc_cs*i*, i = 0 to 7.

(2) In gpmc_waitj, j = 0 to 1.

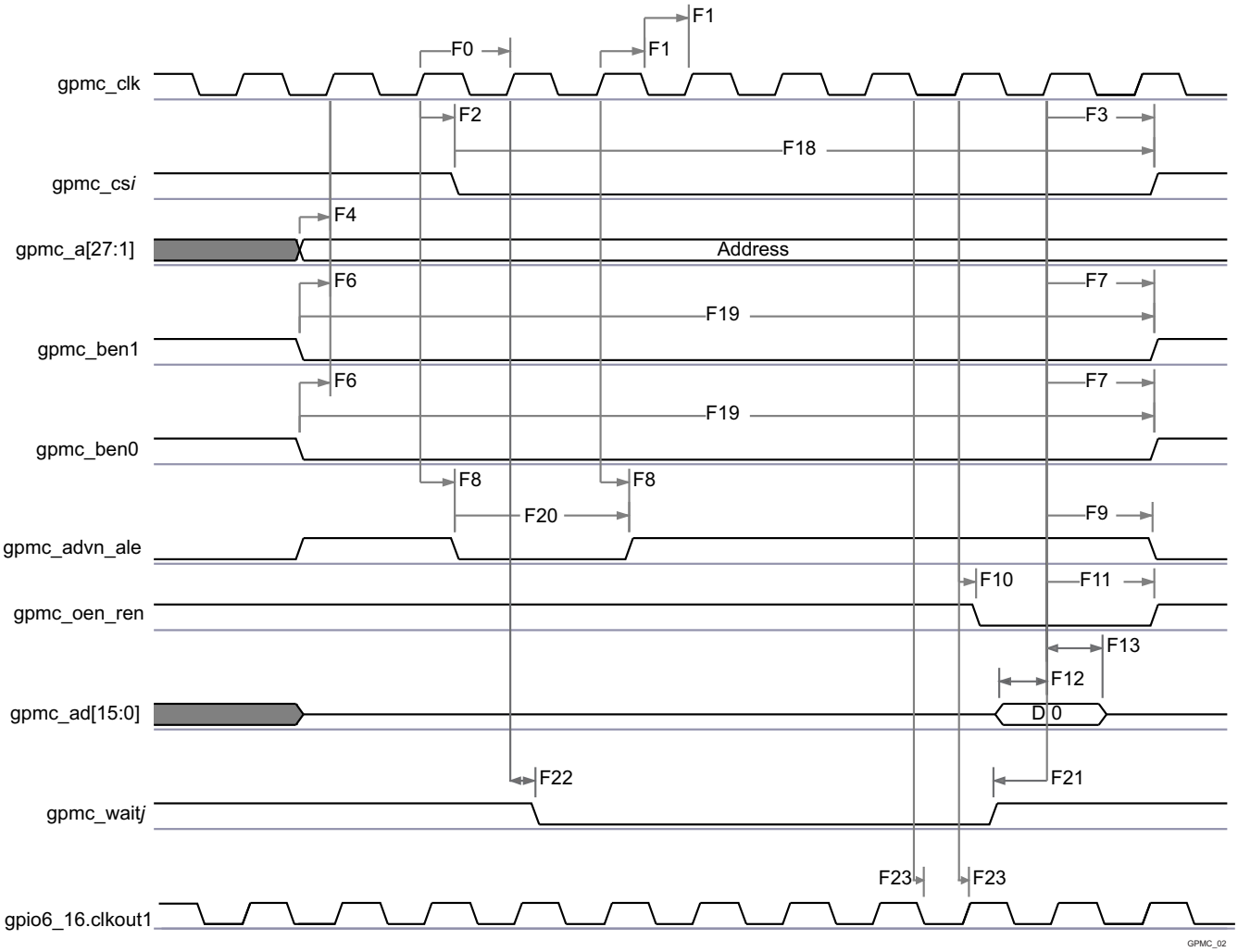

図 7-8. GPMC / Nonmultiplexed 16bits NOR Flash - Synchronous Single Read - (GpmcFCLKDivider = 0)[(1)(2)]

(1) In gpmc_cs*i*, i = 0 to 7.

(2) In gpmc_waitj, j = 0 to 1.

Copyright © 2015–2019, Texas Instruments Incorporated

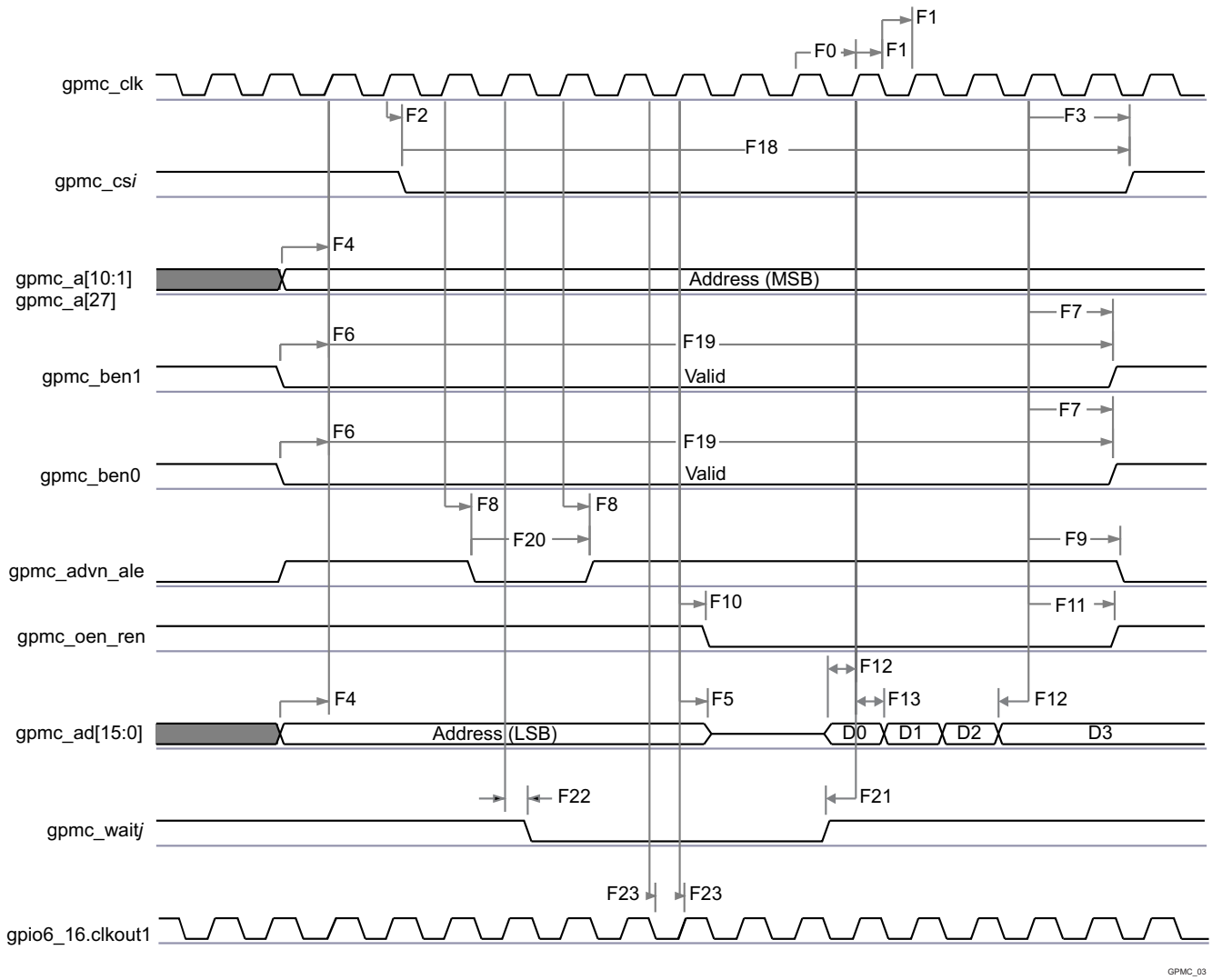

図 7-9. GPMC / Multiplexed 16bits NOR Flash - Synchronous Burst Read 4x16 bits - (GpmcFCLKDivider = 0)[(1)(2)]

(1) In gpmc_cs*i*, i= 0 to 7.

(2) In gpmc_waitj, j = 0 to 1.

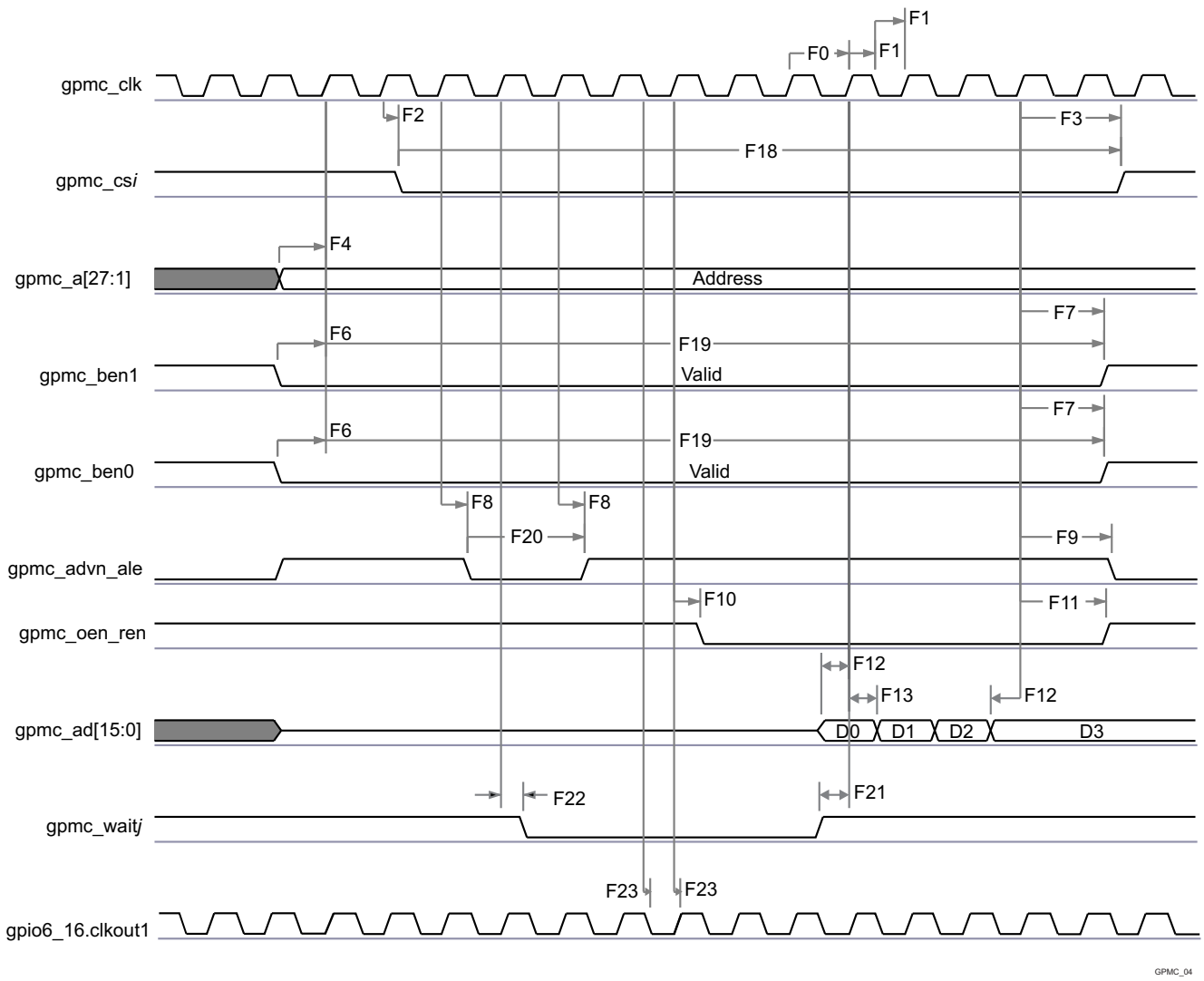

図 7-10. GPMC / Nonmultiplexed 16bits NOR Flash - Synchronous Burst Read 4x16 bits - (GpmcFCLKDivider = 0)[(1)(2)]

(1) In gpmc_cs*i*, i = 0 to 7.

(2) In gpmc_waitj, j = 0 to 1.

Copyright © 2015–2019, Texas Instruments Incorporated

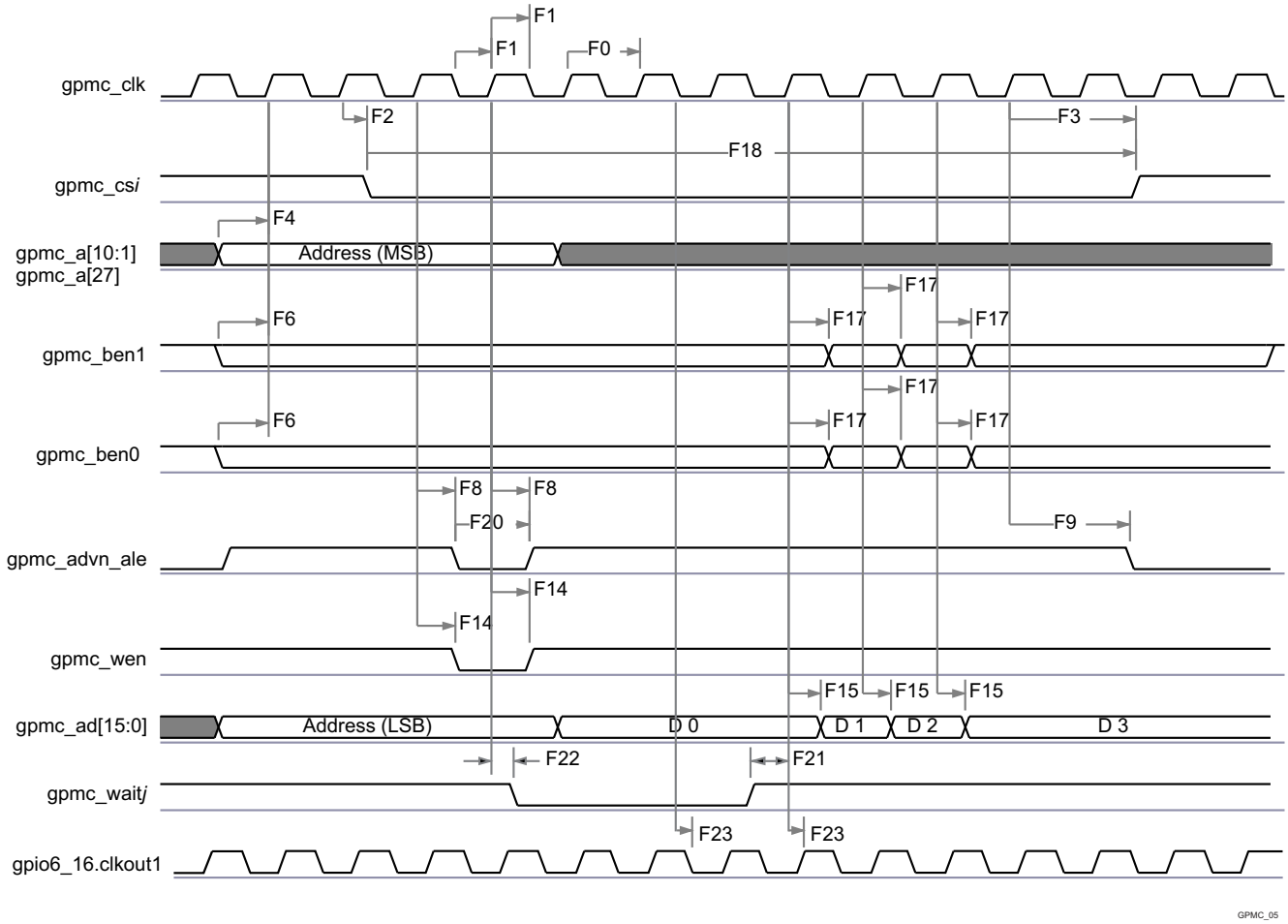

図 7-11. GPMC / Multiplexed 16bits NOR Flash - Synchronous Burst Write 4x16bits - (GpmcFCLKDivider = 0)[(1)(2)]

(1) In gpmc_cs*i*, i = 0 to 7.

(2) In gpmc_waitj, j = 0 to 1.

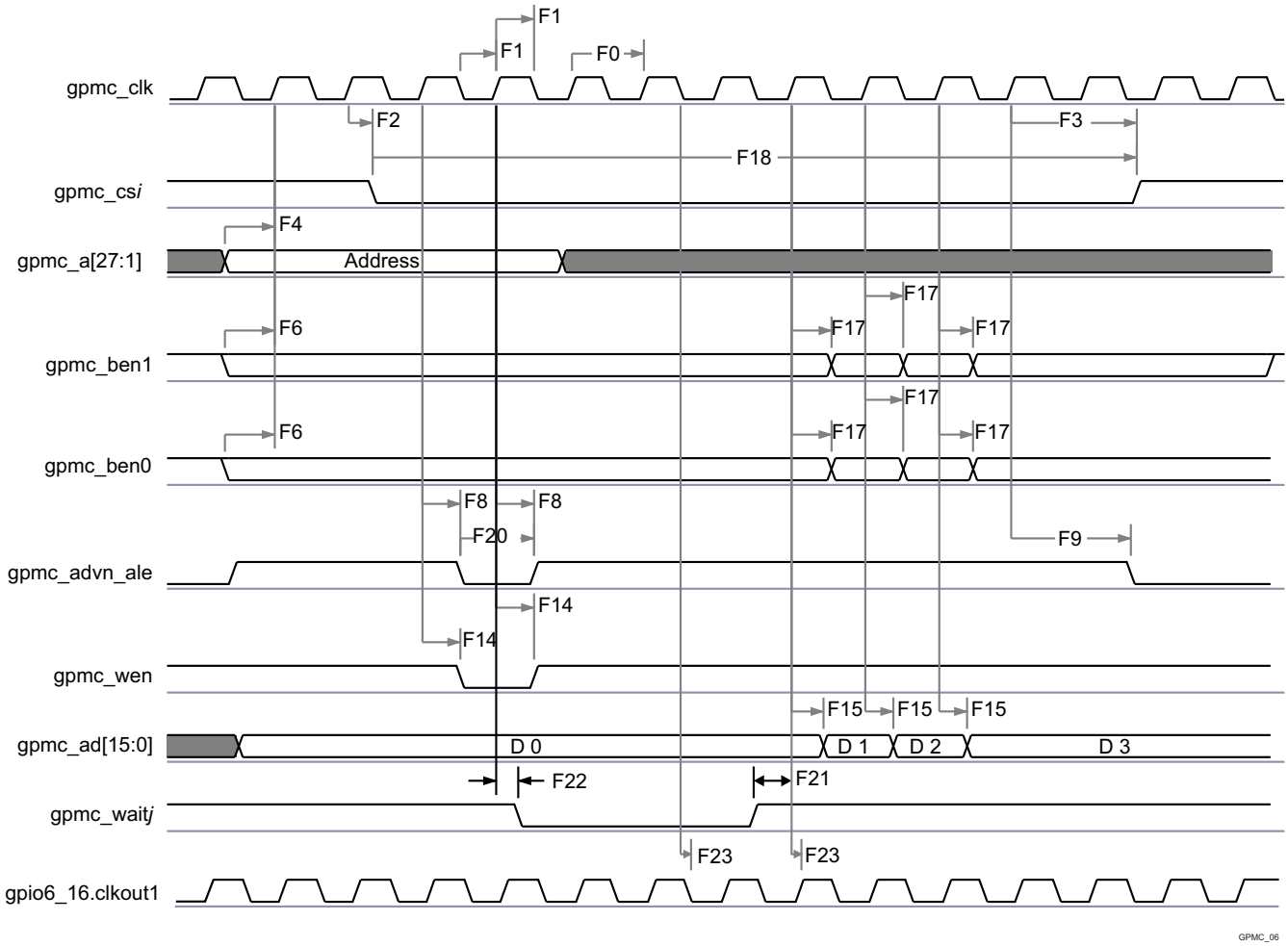

図 7-12. GPMC / Nonmultiplexed 16bits NOR Flash - Synchronous Burst Write 4x16bits - (GpmcFCLKDivider = 0)[(1)(2)]

(1) In gpmc_cs*i*, i = 1 to 7.

(2) In gpmc_waitj, j = 0 to 1.

7.10.2 GPMC/NOR Flash Interface Asynchronous Timing

> 注意
>
> The IO Timings provided in this section are only valid for some GPMC usage modes when the corresponding Virtual IO Timings or Manual IO Timings are configured as described in the tables found in this section.

表 7-29 and 表 7-30 assume testing over the recommended operating conditions and electrical characteristic conditions below (see 図 7-13, 図 7-14, 図 7-15, 図 7-16, 図 7-17, and 図 7-18).

表 7-29. GPMC/NOR Flash Interface Timing Requirements - Asynchronous Mode

NO.	PARAMETER	DESCRIPTION	MIN	MAX	UNIT
FA5	$t_{acc(DAT)}$	Data Maximum Access Time (GPMC_FCLK cycles)		H [(1)]	cycles
FA20	$t_{acc1\text{-}pgmode(DAT)}$	Page Mode Successive Data Maximum Access Time (GPMC_FCLK cycles)		P [(2)]	cycles
FA21	$t_{acc2\text{-}pgmode(DAT)}$	Page Mode First Data Maximum Access Time (GPMC_FCLK cycles)		H [(1)]	cycles

Copyright © 2015–2019, Texas Instruments Incorporated

表 7-29. GPMC/NOR Flash Interface Timing Requirements - Asynchronous Mode (continued)

NO.	PARAMETER	DESCRIPTION	MIN	MAX	UNIT
-	$t_{su(DV-OEH)}$	Setup time, read gpmc_ad[15:0] valid before gpmc_oen_ren high	1.9		ns
-	$t_{h(OEH-DV)}$	Hold time, read gpmc_ad[15:0] valid after gpmc_oen_ren high	1		ns

(1) H = Access Time * (TimeParaGranularity + 1)

(2) P = PageBurstAccessTime * (TimeParaGranularity + 1)

表 7-30. GPMC/NOR Flash Interface Switching Characteristics - Asynchronous Mode

NO.	PARAMETER	DESCRIPTION	MIN	MAX	UNIT
-	$t_{r(DO)}$	Rising time, gpmc_ad[15:0] output data	0.447	4.067	ns
-	$t_{f(DO)}$	Fallling time, gpmc_ad[15:0] output data	0.43	4.463	ns
FA0	$t_{w(nBEV)}$	Pulse duration, gpmc_ben[1:0] valid time		N (1)	ns
FA1	$t_{w(nCSV)}$	Pulse duration, gpmc_cs[7:0] low		A (2)	ns
FA3	$t_{d(nCSV-nADVIV)}$	Delay time, gpmc_cs[7:0] valid to gpmc_advn_ale invalid	B - 2 (3)	B + 4 (3)	ns
FA4	$t_{d(nCSV-nOEIV)}$	Delay time, gpmc_cs[7:0] valid to gpmc_oen_ren invalid (Single read)	C - 2 (4)	C + 4 (4)	ns
FA9	$t_{d(AV-nCSV)}$	Delay time, address bus valid to gpmc_cs[7:0] valid	J - 2 (5)	J + 4 (5)	ns
FA10	$t_{d(nBEV-nCSV)}$	Delay time, gpmc_ben[1:0] valid to gpmc_cs[7:0] valid	J - 2 (5)	J + 4 (5)	ns
FA12	$t_{d(nCSV-nADVV)}$	Delay time, gpmc_cs[7:0] valid to gpmc_advn_ale valid	K - 2 (6)	K + 4 (6)	ns
FA13	$t_{d(nCSV-nOEV)}$	Delay time, gpmc_cs[7:0] valid to gpmc_oen_ren valid	L - 2 (7)	L + 4 (7)	ns
FA16	$t_{w(AIV)}$	Pulse duration, address invalid between 2 successive R/W accesses	G (8)		ns
FA18	$t_{d(nCSV-nOEIV)}$	Delay time, gpmc_cs[7:0] valid to gpmc_oen_ren invalid (Burst read)	I - 2 (9)	I + 4 (9)	ns
FA20	$t_{w(AV)}$	Pulse duration, address valid : 2nd, 3rd and 4th accesses	D (10)		ns
FA25	$t_{d(nCSV-nWEV)}$	Delay time, gpmc_cs[7:0] valid to gpmc_wen valid	E - 2 (11)	E + 4 (11)	ns
FA27	$t_{d(nCSV-nWEIV)}$	Delay time, gpmc_cs[7:0] valid to gpmc_wen invalid	F - 2 (12)	F + 4 (12)	ns
FA28	$t_{d(nWEV-DV)}$	Delay time, gpmc_ wen valid to data bus valid		2	ns
FA29	$t_{d(DV-nCSV)}$	Delay time, data bus valid to gpmc_cs[7:0] valid	J - 2 (5)	J + 4 (5)	ns
FA37	$t_{d(nOEV-AIV)}$	Delay time, gpmc_oen_ren valid to gpmc_ad[15:0] multiplexed address bus phase end		2	ns

(1) For single read: N = RdCycleTime * (TimeParaGranularity + 1) * GPMC_FCLK
For single write: N = WrCycleTime * (TimeParaGranularity + 1) * GPMC_FCLK
For burst read: N = (RdCycleTime + (n - 1) * PageBurstAccessTime) * (TimeParaGranularity + 1) * GPMC_FCLK
For burst write: N = (WrCycleTime + (n - 1) * PageBurstAccessTime) * (TimeParaGranularity + 1) * GPMC_FCLK

(2) For single read: A = (CSRdOffTime - CSOnTime) * (TimeParaGranularity + 1) * GPMC_FCLK
For single write: A = (CSWrOffTime - CSOnTime) * (TimeParaGranularity + 1) * GPMC_FCLK
For burst read: A = (CSRdOffTime - CSOnTime + (n - 1) * PageBurstAccessTime) * (TimeParaGranularity + 1) * GPMC_FCLK
For burst write: A = (CSWrOffTime - CSOnTime + (n - 1) * PageBurstAccessTime) * (TimeParaGranularity + 1) * GPMC_FCLK

(3) For reading: B = ((ADVRdOffTime - CSOnTime) * (TimeParaGranularity + 1) + 0.5 * (ADVExtraDelay - CSExtraDelay)) * GPMC_FCLK
For writing: B = ((ADVWrOffTime - CSOnTime) * (TimeParaGranularity + 1) + 0.5 * (ADVExtraDelay - CSExtraDelay)) * GPMC_FCLK

(4) C = ((OEOffTime - CSOnTime) * (TimeParaGranularity + 1) + 0.5 * (OEExtraDelay - CSExtraDelay)) * GPMC_FCLK

(5) J = (CSOnTime * (TimeParaGranularity + 1) + 0.5 * CSExtraDelay) * GPMC_FCLK

(6) K = ((ADVOnTime - CSOnTime) * (TimeParaGranularity + 1) + 0.5 * (ADVExtraDelay - CSExtraDelay)) * GPMC_FCLK

(7) L = ((OEOnTime - CSOnTime) * (TimeParaGranularity + 1) + 0.5 * (OEExtraDelay - CSExtraDelay)) * GPMC_FCLK

(8) G = Cycle2CycleDelay * GPMC_FCLK * (TimeParaGranularity +1)

(9) I = ((OEOffTime + (n - 1) * PageBurstAccessTime - CSOnTime) * (TimeParaGranularity + 1) + 0.5 * (OEExtraDelay - CSExtraDelay)) * GPMC_FCLK

(10) D = PageBurstAccessTime * (TimeParaGranularity + 1) * GPMC_FCLK

(11) E = ((WEOnTime - CSOnTime) * (TimeParaGranularity + 1) + 0.5 * (WEExtraDelay - CSExtraDelay)) * GPMC_FCLK

(12) F = ((WEOffTime - CSOnTime) * (TimeParaGranularity + 1) + 0.5 * (WEExtraDelay - CSExtraDelay)) * GPMC_FCLK

Copyright © 2015–2019, Texas Instruments Incorporated

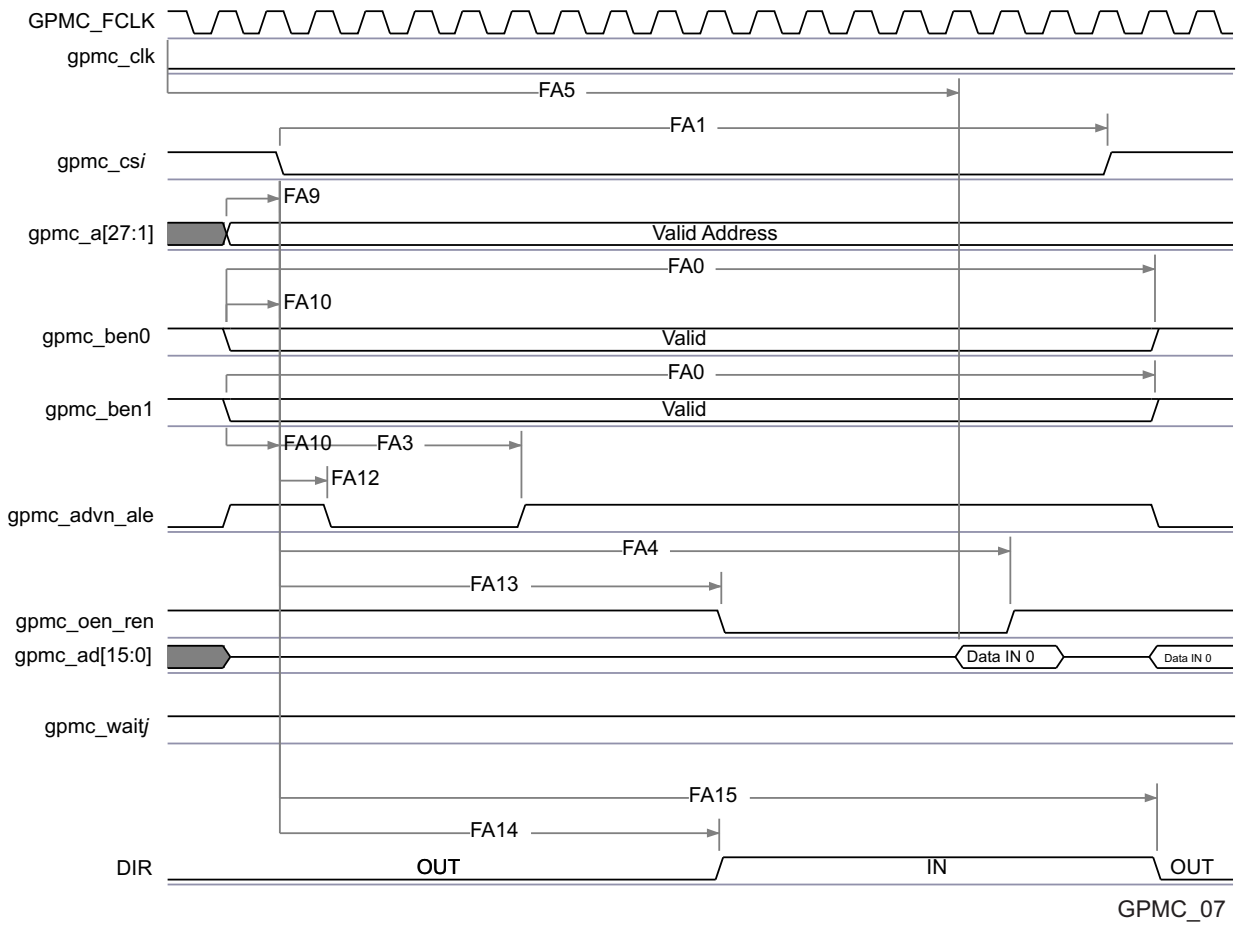

図 7-13. GPMC / NOR Flash - Asynchronous Read - Single Word Timing(1)(2)(3)

(1) In gpmc_cs*i*, i = 0 to 7. In gpmc_waitj, j = 0 to 1.

(2) FA5 parameter illustrates amount of time required to internally sample input data. It is expressed in number of GPMC functional clock cycles. From start of read cycle and after FA5 functional clock cycles, input Data will be internally sampled by active functional clock edge. FA5 value must be stored inside AccessTime register bits field.

(3) GPMC_FCLK is an internal clock (GPMC functional clock) not provided externally.

(4) The "DIR" (direction control) output signal is NOT pinned out on any of the device pads. It is an internal signal only representing a signal direction on the GPMC data bus.

Copyright © 2015–2019, Texas Instruments Incorporated

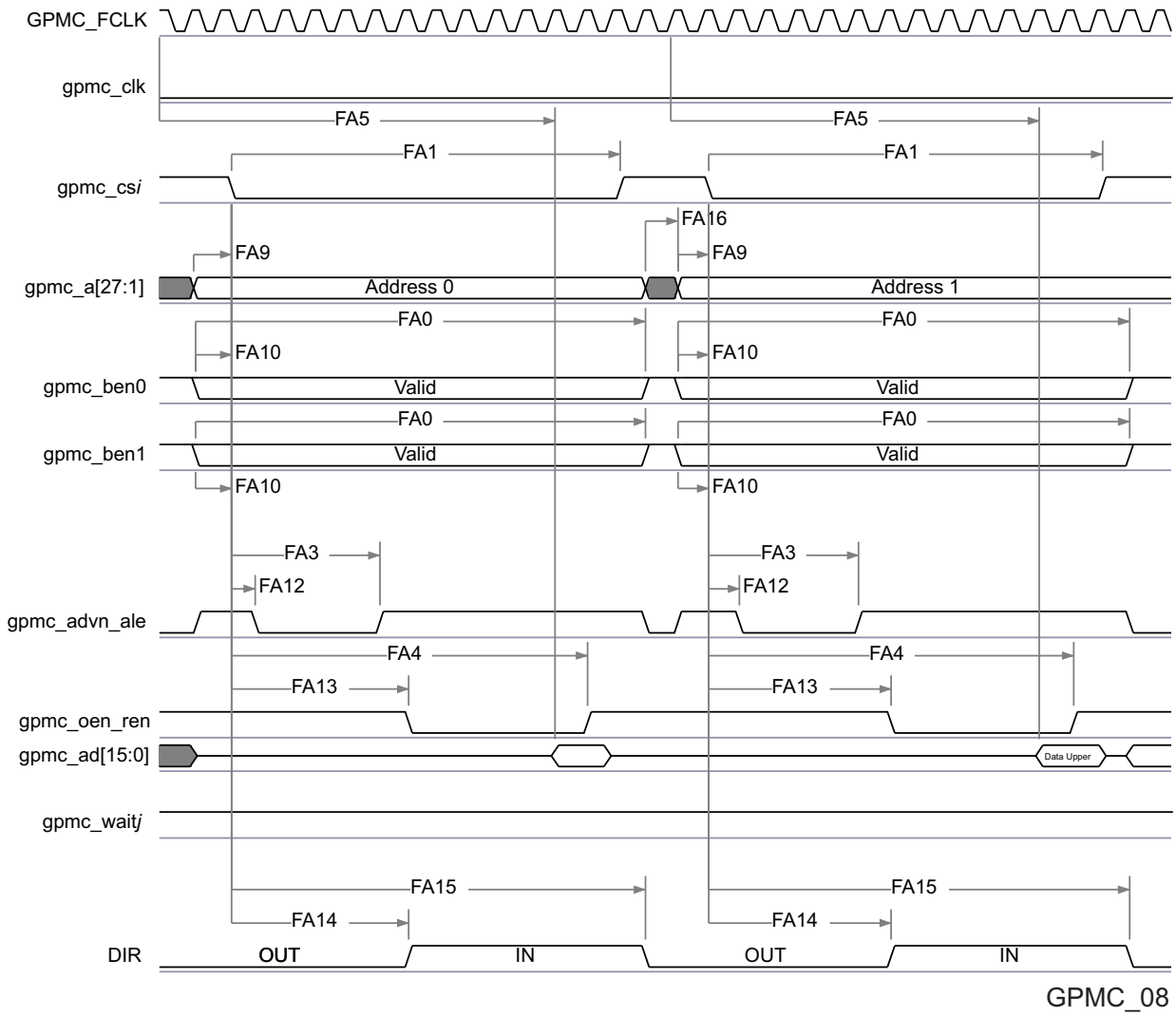

図 7-14. GPMC / NOR Flash - Asynchronous Read - 32-bit Timing(1)(2)(3)

(1) In gpmc_cs*i*, i = 0 to 7. In gpmc_waitj, j = 0 to 1.

(2) FA5 parameter illustrates amount of time required to internally sample input Data. It is expressed in number of GPMC functional clock cycles. From start of read cycle and after FA5 functional clock cycles, input Data will be internally sampled by active functional clock edge. FA5 value should be stored inside AccessTime register bits field.

(3) GPMC_FCLK is an internal clock (GPMC functional clock) not provided externally.

(4) The "DIR" (direction control) output signal is NOT pinned out on any of the device pads. It is an internal signal only representing a signal direction on the GPMC data bus.

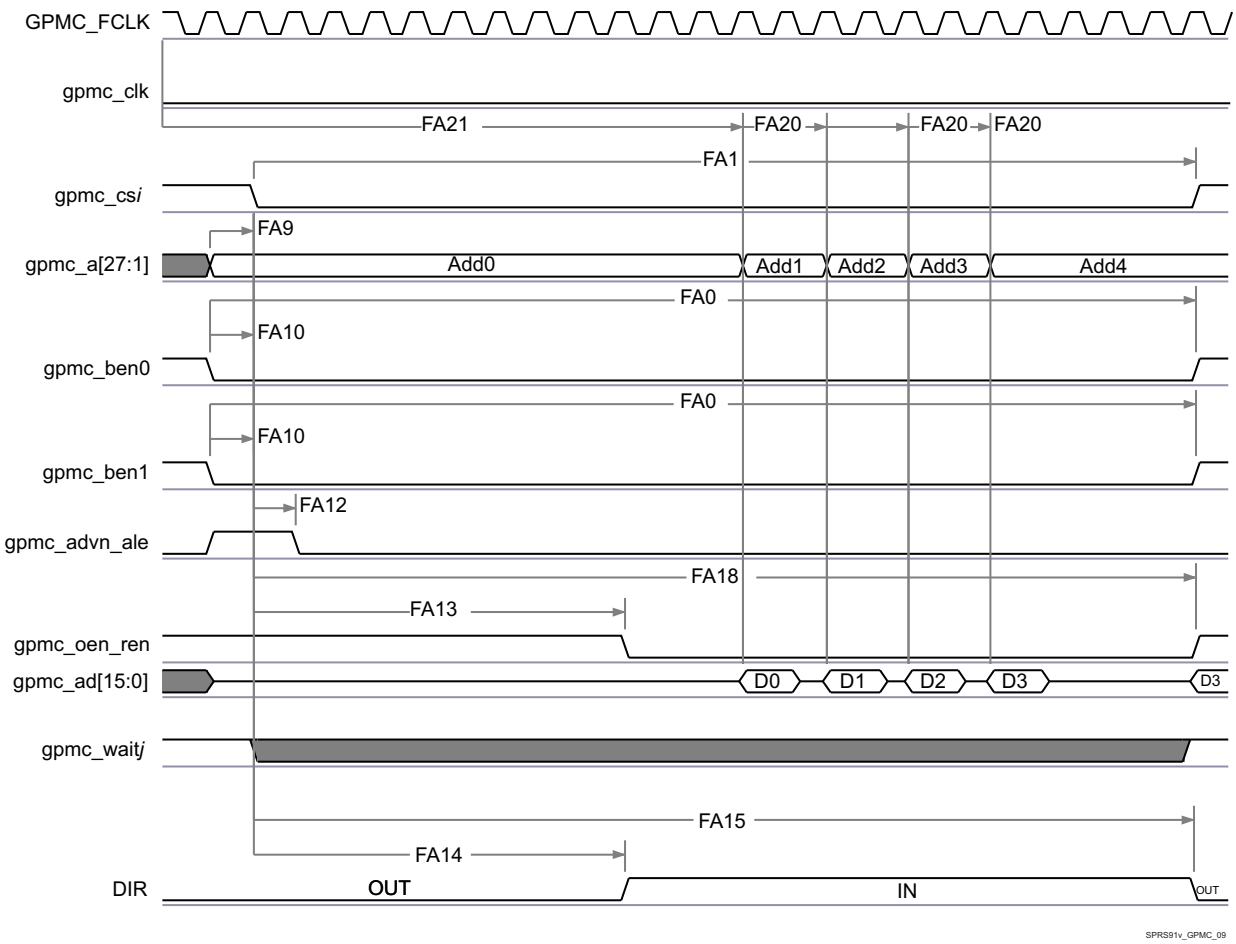

図 7-15. GPMC / NOR Flash - Asynchronous Read - Page Mode 4x16-bit Timing(1)(2)(3)(4)

(1) In gpmc_cs*i*, i = 0 to 7. In gpmc_waitj, j = 0 to 1.

(2) FA21 parameter illustrates amount of time required to internally sample first input Page Data. It is expressed in number of GPMC functional clock cycles. From start of read cycle and after FA21 functional clock cycles, First input Page Data will be internally sampled by active functional clock edge. FA21 calculation is detailled in a separated application note and should be stored inside AccessTime register bits field.

(3) FA20 parameter illustrates amount of time required to internally sample successive input Page Data. It is expressed in number of GPMC functional clock cycles. After each access to input Page Data, next input Page Data will be internally sampled by active functional clock edge after FA20 functional clock cycles. FA20 is also the duration of address phases for successive input Page Data (excluding first input Page Data). FA20 value should be stored in PageBurstAccessTime register bits field.

(4) GPMC_FCLK is an internal clock (GPMC functional clock) not provided externally.

(5) The "DIR" (direction control) output signal is NOT pinned out on any of the device pads. It is an internal signal only representing a signal direction on the GPMC data bus.

Copyright © 2015–2019, Texas Instruments Incorporated

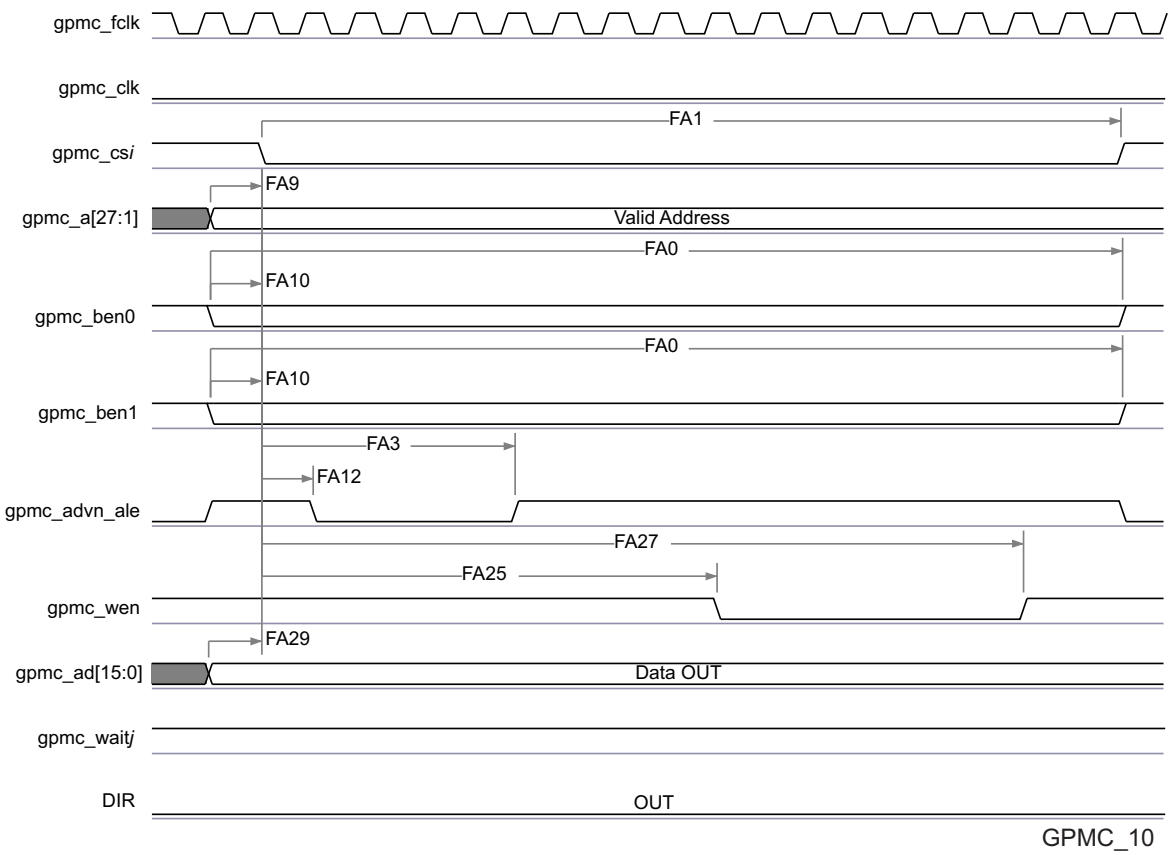

図 7-16. GPMC / NOR Flash - Asynchronous Write - Single Word Timing[(1)]

(1) In gpmc_cs*i*, i = 0 to 7. In gpmc_waitj, j = 0 to 1.

(2) The "DIR" (direction control) output signal is NOT pinned out on any of the device pads. It is an internal signal only representing a signal direction on the GPMC data bus.

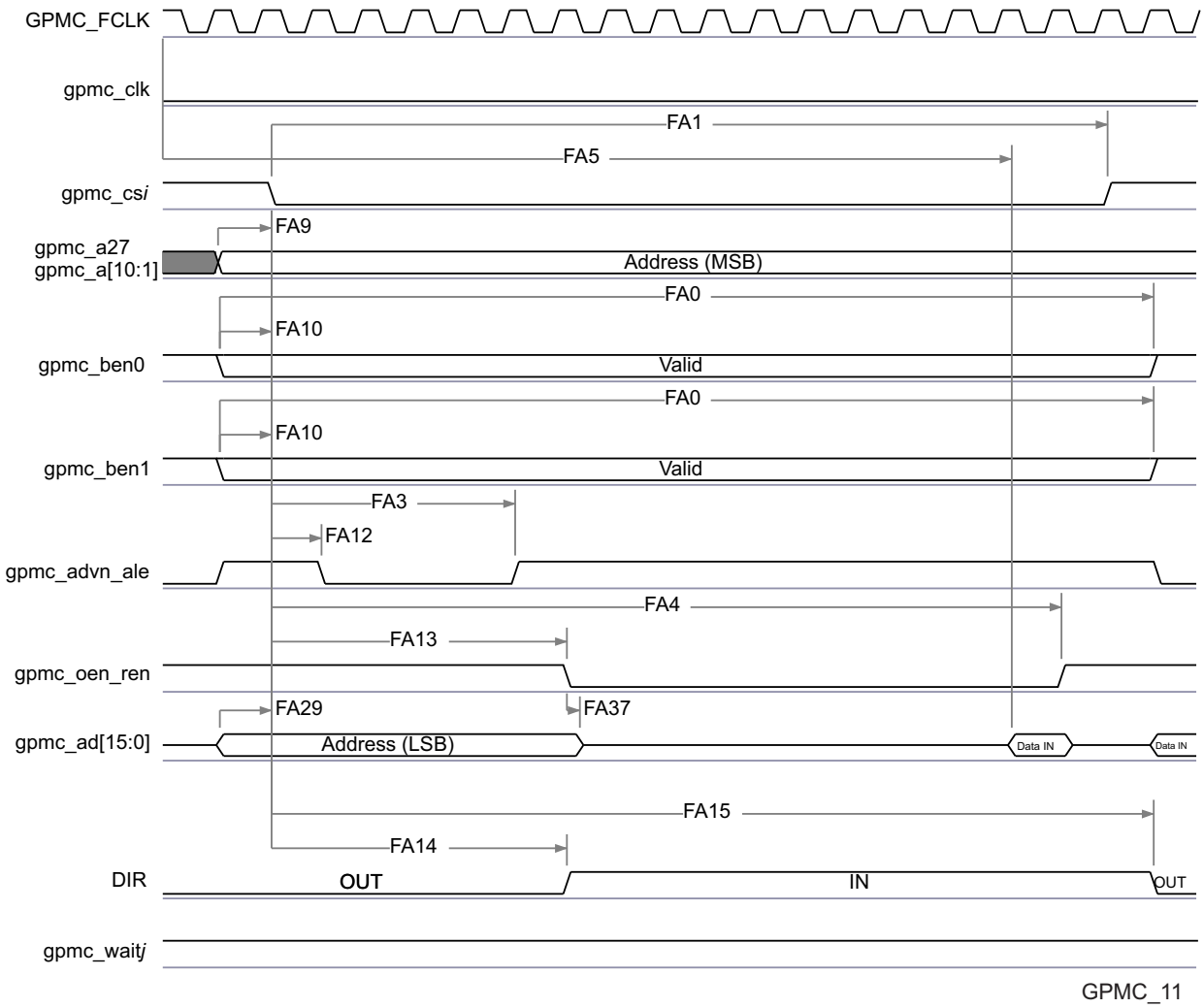

図 7-17. GPMC / Multiplexed NOR Flash - Asynchronous Read - Single Word Timing[(1)(2)(3)]

(1) In gpmc_cs*i*, i = 0 to 7. In gpmc_waitj, j = 0 to 1

(2) FA5 parameter illustrates amount of time required to internally sample input Data. It is expressed in number of GPMC functional clock cycles. From start of read cycle and after FA5 functional clock cycles, input Data will be internally sampled by active functional clock edge. FA5 value should be stored inside AccessTime register bits field.

(3) GPMC_FCLK is an internal clock (GPMC functional clock) not provided externally

(4) The "DIR" (direction control) output signal is NOT pinned out on any of the device pads. It is an internal signal only representing a signal direction on the GPMC data bus.

Copyright © 2015–2019, Texas Instruments Incorporated

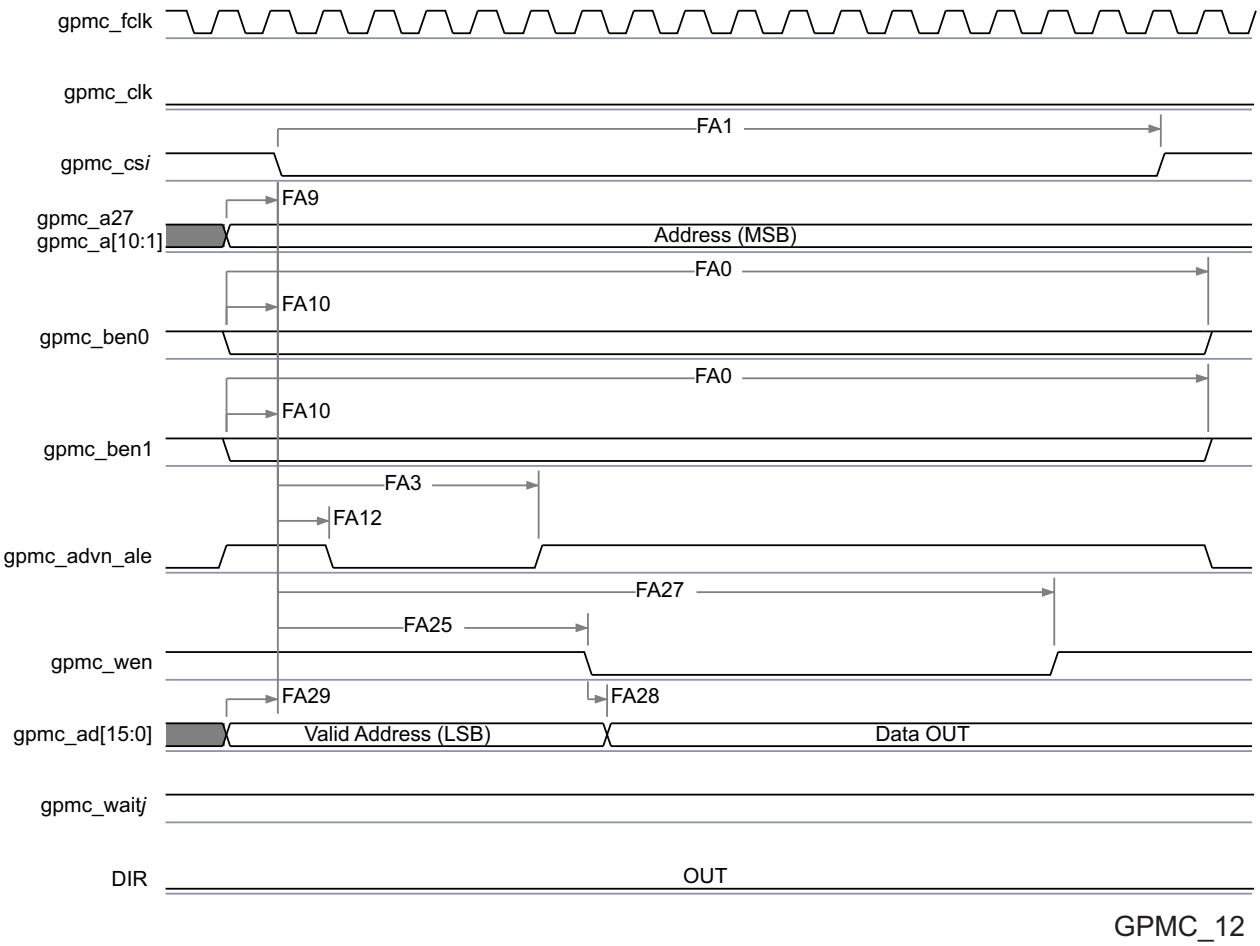

図 7-18. GPMC / Multiplexed NOR Flash - Asynchronous Write - Single Word Timing[(1)]

(1) In gpmc_cs*i*, i = 0 to 7. In gpmc_waitj, j = 0 to 1.

(2) The "DIR" (direction control) output signal is NOT pinned out on any of the device pads. It is an internal signal only representing a signal direction on the GPMC data bus.

7.10.3 GPMC/NAND Flash Interface Asynchronous Timing

> 注意
>
> The IO Timings provided in this section are only valid for some GPMC usage modes when the corresponding Virtual IO Timings or Manual IO Timings are configured as described in the tables found in this section.

表 7-31 and 表 7-32 assume testing over the recommended operating conditions and electrical characteristic conditions below (see 図 7-19, 図 7-20, 図 7-21, and 図 7-22).

表 7-31. GPMC/NAND Flash Interface Timing Requirements

NO.	PARAMETER	DESCRIPTION	MIN	MAX	UNIT
GNF12	$t_{acc(DAT)}$	Data maximum access time (GPMC_FCLK Cycles)		J [(1)]	cycles
-	$t_{su(DV-OEH)}$	Setup time, read gpmc_ad[15:0] valid before gpmc_oen_ren high	1.9		ns
-	$t_{h(OEH-DV)}$	Hold time, read gpmc_ad[15:0] valid after gpmc_oen_ren high	1		ns

(1) J = AccessTime * (TimeParaGranularity + 1)

表 7-32. GPMC/NAND Flash Interface Switching Characteristics

NO.	PARAMETER	DESCRIPTION	MIN	MAX	UNIT
-	$t_{r(DO)}$	Rising time, gpmc_ad[15:0] output data	0.447	4.067	ns
-	$t_{f(DO)}$	Fallling time, gpmc_ad[15:0] output data	0.43	4.463	ns
GNF0	$t_{w(nWEV)}$	Pulse duration, gpmc_wen valid time		A (1)	ns
GNF1	$t_{d(nCSV-nWEV)}$	Delay time, gpmc_cs[7:0] valid to gpmc_wen valid	B - 2 (2)	B + 4 (2)	ns
GNF2	$t_{d(CLEH-nWEV)}$	Delay time, gpmc_ben[1:0] high to gpmc_wen valid	C - 2 (3)	C + 4 (3)	ns
GNF3	$t_{d(nWEV-DV)}$	Delay time, gpmc_ad[15:0] valid to gpmc_wen valid	D - 2 (4)	D + 4 (4)	ns
GNF4	$t_{d(nWEIV-DIV)}$	Delay time, gpmc_wen invalid to gpmc_ad[15:0] invalid	E - 2 (5)	E + 4 (5)	ns
GNF5	$t_{d(nWEIV-CLEIV)}$	Delay time, gpmc_wen invalid to gpmc_ben[1:0] invalid	F - 2 (6)	F + 4 (6)	ns
GNF6	$t_{d(nWEIV-nCSIV)}$	Delay time, gpmc_wen invalid to gpmc_cs[7:0] invalid	G - 2 (7)	G + 4 (7)	ns
GNF7	$t_{d(ALEH-nWEV)}$	Delay time, gpmc_advn_ale high to gpmc_wen valid	C - 2 (3)	C + 4 (3)	ns
GNF8	$t_{d(nWEIV-ALEIV)}$	Delay time, gpmc_wen invalid to gpmc_advn_ale invalid	F - 2 (6)	F + 4 (6)	ns
GNF9	$t_{c(nWE)}$	Cycle time, write cycle time		H (8)	ns
GNF10	$t_{d(nCSV-nOEV)}$	Delay time, gpmc_cs[7:0] valid to gpmc_oen_ren valid	I - 2 (9)	I + 4 (9)	ns
GNF13	$t_{w(nOEV)}$	Pulse duration, gpmc_oen_ren valid time		K (10)	ns
GNF14	$t_{c(nOE)}$	Cycle time, read cycle time		L (11)	ns
GNF15	$t_{d(nOEIV-nCSIV)}$	Delay time, gpmc_oen_ren invalid to gpmc_cs[7:0] invalid	M - 2 (12)	M + 4 (12)	ns

(1) A = (WEOffTime – WEOnTime) * (TimeParaGranularity + 1) * GPMC_FCLK
(2) B = ((WEOnTime – CSOnTime) * (TimeParaGranularity + 1) + 0.5 * (WEExtraDelay – CSExtraDelay)) * GPMC_FCLK
(3) C = ((WEOnTime – ADVOnTime) * (TimeParaGranularity + 1) + 0.5 * (WEExtraDelay – ADVExtraDelay)) * GPMC_FCLK
(4) D = (WEOnTime * (TimeParaGranularity + 1) + 0.5 * WEExtraDelay) * GPMC_FCLK
(5) E = (WrCycleTime – WEOffTime * (TimeParaGranularity + 1) – 0.5 * WEExtraDelay) * GPMC_FCLK
(6) F = (ADVWrOffTime – WEOffTime * (TimeParaGranularity + 1) + 0.5 * (ADVExtraDelay – WEExtraDelay) * GPMC_FCLK
(7) G = (CSWrOffTime – WEOffTime * (TimeParaGranularity + 1) + 0.5 * (CSExtraDelay – WEExtraDelay) * GPMC_FCLK
(8) H = WrCycleTime * (1 + TimeParaGranularity) * GPMC_FCLK
(9) I = ((OEOffTime + (n – 1) * PageBurstAccessTime – CSOnTime) * (TimeParaGranularity + 1) + 0.5 * (OEExtraDelay – CSExtraDelay)) * GPMC_FCLK
(10) K = (OEOffTime – OEOnTime) * (1 + TimeParaGranularity) * GPMC_FCLK
(11) L = RdCycleTime * (1 + TimeParaGranularity) * GPMC_FCLK
(12) M = (CSRdOffTime – OEOffTime * (TimeParaGranularity + 1) + 0.5 * (CSExtraDelay – OEExtraDelay) * GPMC_FCLK

Copyright © 2015–2019, Texas Instruments Incorporated

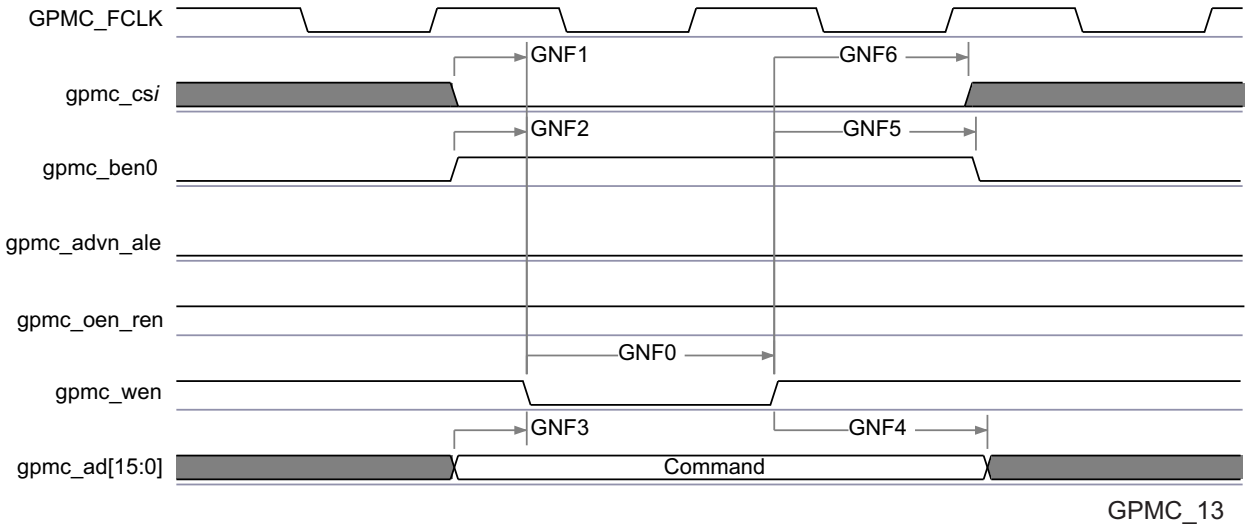

図 7-19. GPMC / NAND Flash - Command Latch Cycle Timing[(1)]

(1) In gpmc_cs*i*, i = 0 to 7.

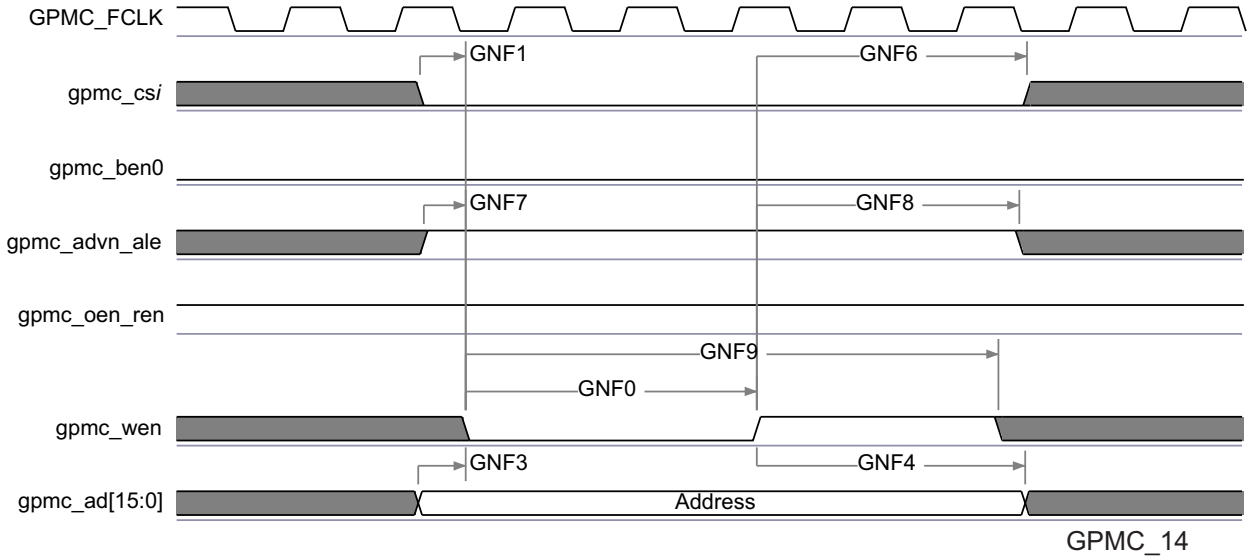

図 7-20. GPMC / NAND Flash - Address Latch Cycle Timing[(1)]

(1) In gpmc_cs*i*, i = 0 to 7.

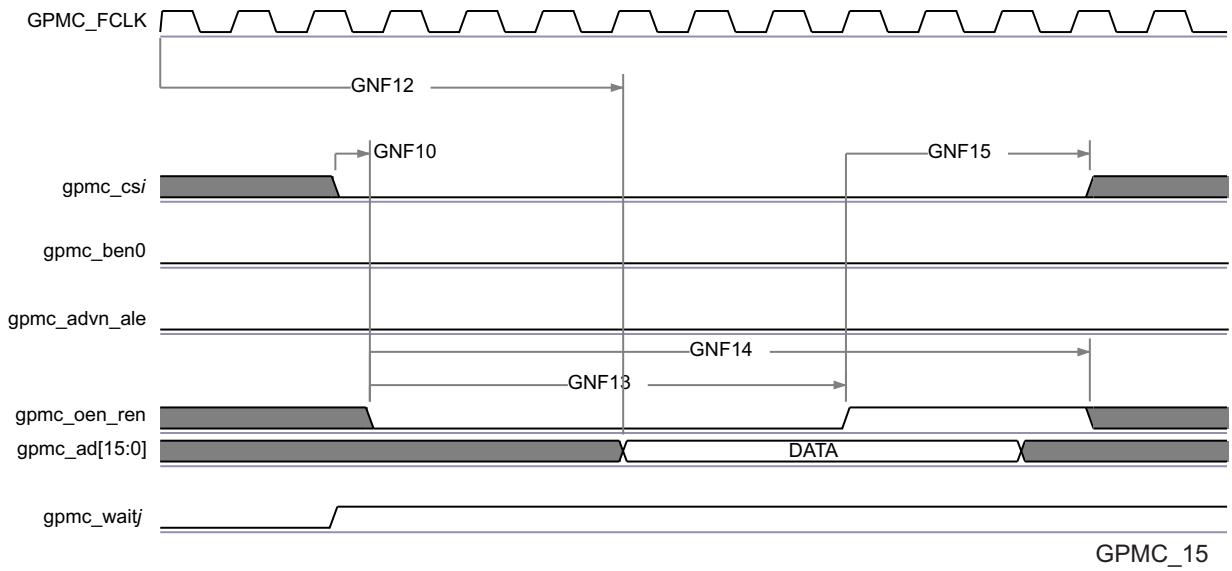

図 7-21. GPMC / NAND Flash - Data Read Cycle Timing(1)(2)(3)

(1) GNF12 parameter illustrates amount of time required to internally sample input Data. It is expressed in number of GPMC functional clock cycles. From start of read cycle and after GNF12 functional clock cycles, input data will be internally sampled by active functional clock edge. GNF12 value must be stored inside AccessTime register bits field.

(2) GPMC_FCLK is an internal clock (GPMC functional clock) not provided externally.

(3) In gpmc_cs*i*, i = 0 to 7. In gpmc_waitj, j = 0 to 1.

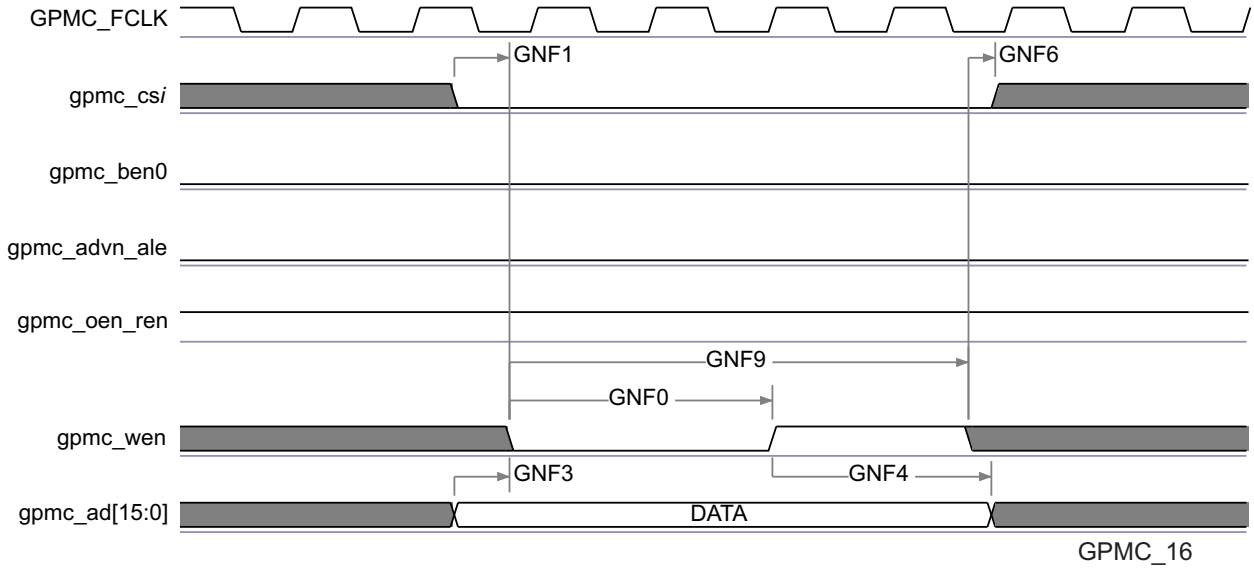

図 7-22. GPMC / NAND Flash - Data Write Cycle Timing(1)

(1) In gpmc_cs*i*, i = 0 to 7.

注: To configure the desired virtual mode the user must set MODESELECT bit and DELAYMODE bitfield for each corresponding pad control register.

The pad control registers are presented in 表 4-3 and described in Device TRM, *Chapter 18 - Control Module*.

Virtual IO Timings Modes must be used to ensure some IO timings for GPMC. See 表 7-2 *Modes Summary* for a list of IO timings requiring the use of Virtual IO Timings Modes. See 表 7-33 *Virtual Functions Mapping for GPMC* for a definition of the Virtual modes.

Copyright © 2015–2019, Texas Instruments Incorporated

表 7-33 presents the values for DELAYMODE bitfield.

表 7-33. Virtual Functions Mapping for GPMC

BALL NUMBER	BALL NAME	Delay Mode Value	MUXMODE[15:0]					
		GPMC_VIRTUAL 1	0	1	2	3	5	6
M6	gpmc_ad0	11	gpmc_ad0					
M2	gpmc_ad1	11	gpmc_ad1					
L5	gpmc_ad2	11	gpmc_ad2					
M1	gpmc_ad3	11	gpmc_ad3					
L6	gpmc_ad4	11	gpmc_ad4					
L4	gpmc_ad5	11	gpmc_ad5					
L3	gpmc_ad6	11	gpmc_ad6					
L2	gpmc_ad7	11	gpmc_ad7					
L1	gpmc_ad8	11	gpmc_ad8					
K2	gpmc_ad9	11	gpmc_ad9					
J1	gpmc_ad10	11	gpmc_ad10					
J2	gpmc_ad11	11	gpmc_ad11					
H1	gpmc_ad12	11	gpmc_ad12					
J3	gpmc_ad13	11	gpmc_ad13					
H2	gpmc_ad14	11	gpmc_ad14					
H3	gpmc_ad15	11	gpmc_ad15					
R6	gpmc_a0	11	gpmc_a0					
T9	gpmc_a1	11	gpmc_a1					
T6	gpmc_a2	11	gpmc_a2					
T7	gpmc_a3	10	gpmc_a3					
P6	gpmc_a4	10	gpmc_a4					
R9	gpmc_a5	11	gpmc_a5					
R5	gpmc_a6	11	gpmc_a6					
P5	gpmc_a7	11	gpmc_a7					
N7	gpmc_a8	12	gpmc_a8					
R4	gpmc_a9	12	gpmc_a9					
N9	gpmc_a10	12	gpmc_a10					
P9	gpmc_a11	11	gpmc_a11					
P4	gpmc_a12	13	gpmc_a12				gpmc_a0	
R3	gpmc_a13	12	gpmc_a13					
T2	gpmc_a14	12	gpmc_a14					
U2	gpmc_a15	12	gpmc_a15					
U1	gpmc_a16	12	gpmc_a16					
P3	gpmc_a17	12	gpmc_a17					
R2	gpmc_a18	12	gpmc_a18					
K7	gpmc_a19	11	gpmc_a19		gpmc_a13			
M7	gpmc_a20	11	gpmc_a20		gpmc_a14			
J5	gpmc_a21	11	gpmc_a21		gpmc_a15			
K6	gpmc_a22	11	gpmc_a22		gpmc_a16			
J7	gpmc_a23	11	gpmc_a23		gpmc_a17			
J4	gpmc_a24	11	gpmc_a24		gpmc_a18			
J6	gpmc_a25	11	gpmc_a25		gpmc_a19			
H4	gpmc_a26	11	gpmc_a26		gpmc_a20			

表 7-33. Virtual Functions Mapping for GPMC (continued)

BALL NUMBER	BALL NAME	Delay Mode Value	MUXMODE[15:0]					
		GPMC_VIRTUAL 1	0	1	2	3	5	6
H5	gpmc_a27	11	gpmc_a27		gpmc_a21			
H6	gpmc_cs1	11	gpmc_cs1		gpmc_a22			
T1	gpmc_cs0	14	gpmc_cs0					
P2	gpmc_cs2	12	gpmc_cs2					
P1	gpmc_cs3	10	gpmc_cs3				gpmc_a1	
P7	gpmc_clk	12	gpmc_clk	gpmc_cs7		gpmc_wait1		
N1	gpmc_advn_ale	13	gpmc_advn_ale	gpmc_cs6		gpmc_wait1	gpmc_a2	gpmc_a23
M5	gpmc_oen_ren	14	gpmc_oen_ren					
M3	gpmc_wen	14	gpmc_wen					
N6	gpmc_ben0	11	gpmc_ben0	gpmc_cs4				
M4	gpmc_ben1	11	gpmc_ben1	gpmc_cs5			gpmc_a3	
N2	gpmc_wait0	14	gpmc_wait0					
AG5	vin1a_d11	9					gpmc_a23	
AF2	vin1a_d12	9					gpmc_a24	
AF6	vin1a_d13	9					gpmc_a25	
AF3	vin1a_d14	9					gpmc_a26	
AF4	vin1a_d15	9					gpmc_a27	

7.11 Timers

The device has 16 general-purpose (GP) timers (TIMER1 - TIMER16), two watchdog timers, and a 32-kHz synchronized timer (COUNTER_32K) that have the following features:

- Dedicated input trigger for capture mode and dedicated output trigger/pulse width modulation (PWM) signal
- Interrupts generated on overflow, compare, and capture
- Free-running 32-bit upward counter
- Supported modes:
  - Compare and capture modes
  - Auto-reload mode
  - Start-stop mode
- On-the-fly read/write register (while counting)

The device has two system watchdog timer (WD_TIMER1 and WD_TIMER2) that have the following features:

- Free-running 32-bit upward counter
- On-the-fly read/write register (while counting)
- Reset upon occurrence of a timer overflow condition

The device includes one instance of the 32-bit watchdog timer: WD_TIMER2, also called the MPU watchdog timer.

The watchdog timer is used to provide a recovery mechanism for the device in the event of a fault condition, such as a non-exiting code loop.

注: For additional information on the Timer Module, see Timers chapter in the Device TRM.

7.12 Inter-Integrated Circuit Interface (I2C)

Copyright © 2015–2019, Texas Instruments Incorporated

The device includes 5 inter-integrated circuit (I2C) modules which provide an interface to other devices compliant with Philips Semiconductors Inter-IC bus (I2C-bus™) specification version 2.1. External components attached to this 2-wire serial bus can transmit/receive 8-bit data to/from the device through the I2C module.

注: Note that, on I2C1 and I2C2, due to characteristics of the open drain IO cells, HS mode is not supported.

注: Inter-integrated circuit i (i=1 to 5) module is also referred to as I2Ci.

注: For more information, see the Multimaster High-Speed I2C Controller section of the Device TRM.

表 7-34, 表 7-35 and 図 7-23 assume testing over the recommended operating conditions and electrical characteristic conditions below.

表 7-34. Timing Requirements for I2C Input Timings(1)

NO.	PARAMETER	DESCRIPTION	STANDARD MODE		FAST MODE		UNIT
			MIN	MAX	MIN	MAX	
1	$t_{c(SCL)}$	Cycle time, SCL	10		2.5		µs
2	$t_{su(SCLH-SDAL)}$	Setup time, SCL high before SDA low (for a repeated START condition)	4.7		0.6		µs
3	$t_{h(SDAL-SCLL)}$	Hold time, SCL low after SDA low (for a START and a repeated START condition)	4		0.6		µs
4	$t_{w(SCLL)}$	Pulse duration, SCL low	4.7		1.3		µs
5	$t_{w(SCLH)}$	Pulse duration, SCL high	4		0.6		µs
6	$t_{su(SDAV-SCLH)}$	Setup time, SDA valid before SCL high	250		100(2)		ns
7	$t_{h(SCLL-SDAV)}$	Hold time, SDA valid after SCL low	0(3)	3.45(4)	0(3)	0.9(4)	µs
8	$t_{w(SDAH)}$	Pulse duration, SDA high between STOP and START conditions	4.7		1.3		µs
9	$t_{r(SDA)}$	Rise time, SDA		1000	$20 + 0.1C_b$ (5)	300(3)	ns
10	$t_{r(SCL)}$	Rise time, SCL		1000	$20 + 0.1C_b$ (5)	300(3)	ns
11	$t_{f(SDA)}$	Fall time, SDA		300	$20 + 0.1C_b$ (5)	300(3)	ns
12	$t_{f(SCL)}$	Fall time, SCL		300	$20 + 0.1C_b$ (5)	300(3)	ns
13	$t_{su(SCLH-SDAH)}$	Setup time, SCL high before SDA high (for STOP condition)	4		0.6		µs
14	$t_{w(SP)}$	Pulse duration, spike (must be suppressed)			0	50	ns
15	C_b (5)	Capacitive load for each bus line		400		400	pF

(1) The I2C pins SDA and SCL do not feature fail-safe I/O buffers. These pins could potentially draw current when the device is powered down.

(2) A Fast-mode I^2C-bus™ device can be used in a Standard-mode I^2C-bus system, but the requirement $t_{su(SDA-SCLH)} \geq 250$ ns must then be met. This will automatically be the case if the device does not stretch the LOW period of the SCL signal. If such a device does stretch the LOW period of the SCL signal, it must output the next data bit to the SDA line t_r max + $t_{su(SDA-SCLH)}$= 1000 + 250 = 1250 ns (according to the Standard-mode I^2C-Bus Specification) before the SCL line is released.

(3) A device must internally provide a hold time of at least 300 ns for the SDA signal (referred to the V_{IHmin} of the SCL signal) to bridge the undefined region of the falling edge of SCL.

(4) The maximum $t_{h(SDA-SCLL)}$ has only to be met if the device does not stretch the low period [$t_{w(SCLL)}$] of the SCL signal.

(5) C_b = total capacitance of one bus line in pF. If mixed with HS-mode devices, faster fall-times are allowed.

表 7-35. Timing Requirements for I²C HS-Mode (I²C3/4/5 Only)[1]

NO.	PARAMETER	DESCRIPTION	C_b = 100 pF MAX		C_b = 400 pF [2]		UNIT
			MIN	MAX	MIN	MAX	
1	$t_{c(SCL)}$	Cycle time, SCL	0.294		0.588		µs
2	$t_{su(SCLH-SDAL)}$	Set-up time, SCL high before SDA low (for a repeated START condition)	160		160		ns
3	$t_{h(SDAL-SCLL)}$	Hold time, SCL low after SDA low (for a repeated START condition)	160		160		ns
4	$t_{w(SCLL)}$	LOW period of the SCLH clock	160		320		ns
5	$t_{w(SCLH)}$	HIGH period of the SCLH clock	60		120		ns
6	$t_{su(SDAV-SCLH)}$	Setup time, SDA valid vefore SCL high	10		10		ns
7	$t_{h(SCLL-SDAV)}$	Hold time, SDA valid after SCL low	0 [3]	70	0 [3]	150	ns
13	$t_{su(SCLH-SDAH)}$	Setup time, SCL high before SDA high (for a STOP condition)	160		160		ns
14	$t_{w(SP)}$	Pulse duration, spike (must be suppressed)	0	10	0	10	ns
15	C_b [2]	Capacitive load for SDAH and SCLH lines		100		400	pF
16	C_b	Capacitive load for SDAH + SDA line and SCLH + SCL line		400		400	pF

(1) I²C HS-Mode is only supported on I²C3/4/5. I2C HS-Mode is not supported on I²C1/2.
(2) For bus line loads C_b between 100 and 400 pF the timing parameters must be linearly interpolated.
(3) A device must internally provide a Data hold time to bridge the undefined part between V_{IH} and V_{IL} of the falling edge of the SCLH signal. An input circuit with a threshold as low as possible for the falling edge of the SCLH signal minimizes this hold time.

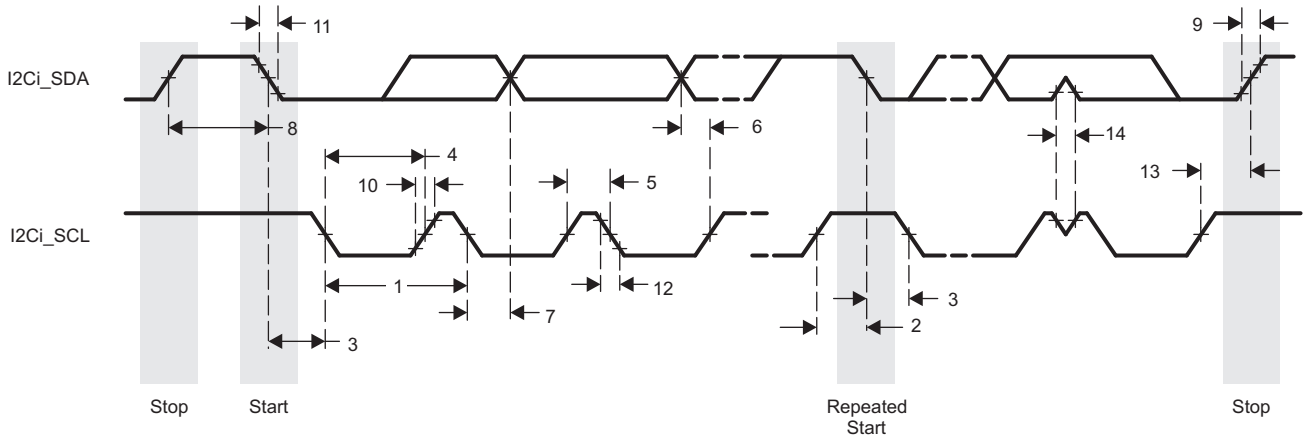

図 7-23. I2C Receive Timing

表 7-36 and 図 7-24 assume testing over the recommended operating conditions and electrical characteristic conditions below.

表 7-36. Switching Characteristics Over Recommended Operating Conditions for I2C Output Timings[2]

NO.	PARAMETER	DESCRIPTION	STANDARD MODE		FAST MODE		UNIT
			MIN	MAX	MIN	MAX	
16	$t_{c(SCL)}$	Cycle time, SCL	10		2.5		µs
17	$t_{su(SCLH-SDAL)}$	Setup time, SCL high before SDA low (for a repeated START condition)	4.7		0.6		µs
18	$t_{h(SDAL-SCLL)}$	Hold time, SCL low after SDA low (for a START and a repeated START condition)	4		0.6		µs

Copyright © 2015–2019, Texas Instruments Incorporated

表 7-36. Switching Characteristics Over Recommended Operating Conditions for I2C Output Timings(2) (continued)

NO.	PARAMETER	DESCRIPTION	STANDARD MODE		FAST MODE		UNIT
			MIN	MAX	MIN	MAX	
19	$t_{w(SCLL)}$	Pulse duration, SCL low	4.7		1.3		µs
20	$t_{w(SCLH)}$	Pulse duration, SCL high	4		0.6		µs
21	$t_{su(SDAV-SCLH)}$	Setup time, SDA valid before SCL high	250		100		ns
22	$t_{h(SCLL-SDAV)}$	Hold time, SDA valid after SCL low (for I2C bus devices)	0	3.45	0	0.9	µs
23	$t_{w(SDAH)}$	Pulse duration, SDA high between STOP and START conditions	4.7		1.3		µs
24	$t_{r(SDA)}$	Rise time, SDA		1000	$20 + 0.1C_b$ (1) (3)	300(3)	ns
25	$t_{r(SCL)}$	Rise time, SCL		1000	$20 + 0.1C_b$ (1) (3)	300(3)	ns
26	$t_{f(SDA)}$	Fall time, SDA		300	$20 + 0.1C_b$ (1) (3)	300(3)	ns
27	$t_{f(SCL)}$	Fall time, SCL		300	$20 + 0.1C_b$ (1) (3)	300(3)	ns
28	$t_{su(SCLH-SDAH)}$	Setup time, SCL high before SDA high (for STOP condition)	4		0.6		µs
29	C_p	Capacitance for each I2C pin		10		10	pF

(1) C_b = total capacitance of one bus line in pF. If mixed with HS-mode devices, faster fall-times are allowed.
(2) Software must properly configure the I2C module registers to achieve the timings shown in this table. See the Device TRM for details.
(3) These timings apply only to I2C1 and I2C2. I2C3, I2C4, and I2C5 use standard LVCMOS buffers to emulate open-drain buffers and their rise/fall times should be referenced in the device IBIS model.

注: I2C emulation is achieved by configuring the LVCMOS buffers to output Hi-Z instead of driving high when transmitting logic-1.

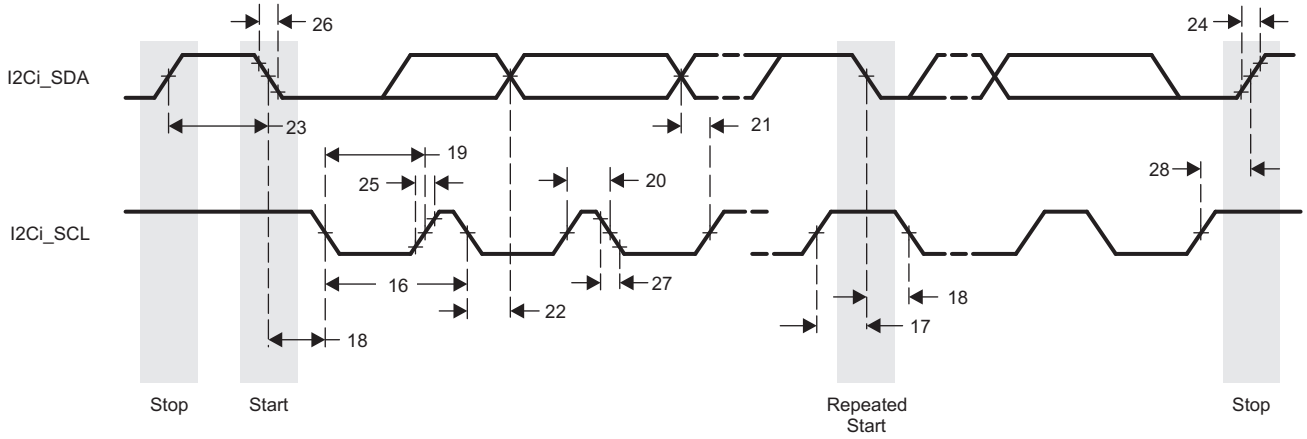

図 7-24. I2C Transmit Timing

7.13 HDQ / 1-Wire Interface (HDQ1W)

The module is intended to work with both HDQ and 1-Wire protocols. The protocols use a single wire to communicate between the master and the slave. The protocols employ an asynchronous return to one mechanism where, after any command, the line is pulled high.

注: For more information, see the HDQ / 1-Wire section of the Device TRM.

7.13.1 HDQ / 1-Wire — HDQ Mode

表 7-37 and 表 7-38 assume testing over the recommended operating conditions and electrical characteristic conditions below (see 図 7-25, 図 7-26, 図 7-27, and 図 7-28).

表 7-37. HDQ/1-Wire Timing Requirements—HDQ Mode

NO.	PARAMETER	DESCRIPTION	MIN	MAX	UNIT
1	t_{CYCH}	Read bit window timing	190	250	µs
2	t_{HW1}	Read one data valid after HDQ low	32(2)	66(2)	µs
3	t_{HW0}	Read zero data hold after HDQ low	70(2)	145(2)	µs
4	t_{RSPS}	Response time from HDQ slave device(1)	190	320	µs

(1) Defined by software.

(2) If the HDQ slave device drives a logic-low state after tHW0 maximum, it can be interpreted as a break pulse. For more information see 表 7-38 and the HDQ/1-Wire chapter of the TRM.

表 7-38. HDQ / 1-Wire Switching Characteristics - HDQ Mode

NO.	PARAMETER	DESCRIPTION	MIN	MAX	UNIT
5	t_B	Break timing	190		µs
6	t_{BR}	Break recovery time	40		µs
7	t_{CYCD}	Write bit windows timing	190		µs
8	t_{DW1}	Write one data valid after HDQ low	0.5	50	µs
9	t_{DW0}	Write zero data hold after HDQ low	86	145	µs

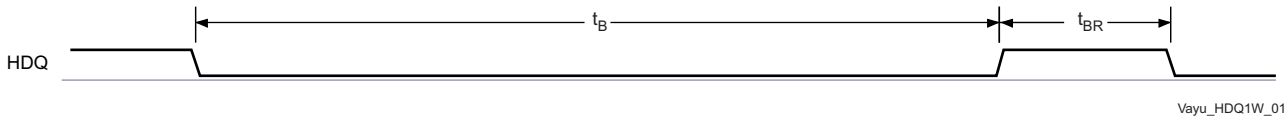

図 7-25. HDQ Break and Break Recovery Timing — HDQ Interface Writing to Slave

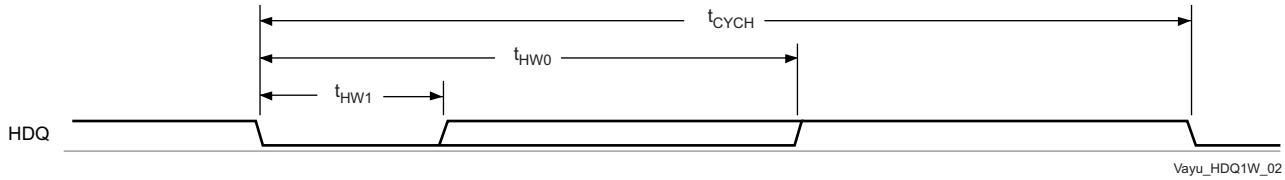

図 7-26. Device HDQ Interface Bit Read Timing (Data)

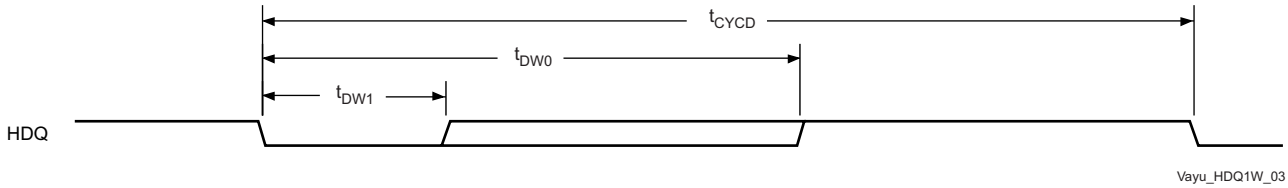

図 7-27. Device HDQ Interface Bit Write Timing (Command / Address or Data)

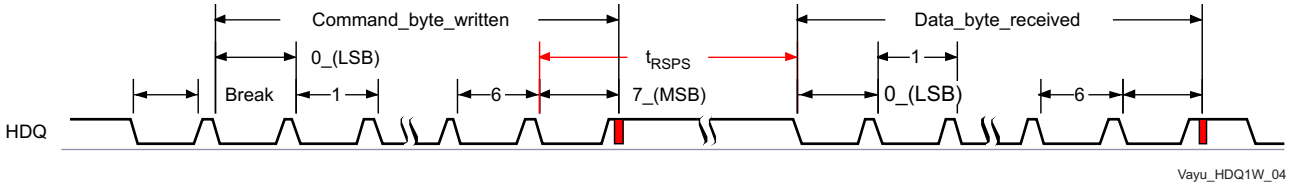

図 7-28. HDQ Communication Timing

Copyright © 2015–2019, Texas Instruments Incorporated

7.13.2 HDQ/1-Wire—1-Wire Mode

表 7-39 and 表 7-40 assume testing over the recommended operating conditions and electrical characteristic conditions below (see 図 7-29, 図 7-30, and 図 7-31).

表 7-39. HDQ / 1-Wire Timing Requirements - 1-Wire Mode

NO.	PARAMETER	DESCRIPTION	MIN	MAX	UNIT
10	t_{PDH}	Presence pulse delay high	15	60	µs
11	t_{PDL}	Presence pulse delay low	60	240	µs
12	t_{RDV}	Read data valid time	t_{LOWR}	15	µs
13	t_{REL}	Read data release time	0	45	µs

表 7-40. HDQ / 1-Wire Switching Characteristics - 1-Wire Mode

NO.	PARAMETER	DESCRIPTION	MIN	MAX	UNIT
14	t_{RSTL}	Reset time low	480	960	µs
15	t_{RSTH}	Reset time high	480		µs
16	t_{SLOT}	Bit cycle time	60	120	µs
17	t_{LOW1}	Write bit-one time	1	15	µs
18	t_{LOW0}	Write bit-zero time(2)	60	120	µs
19	t_{REC}	Recovery time	1		µs
20	t_{LOWR}	Read bit strobe time(1)	1	15	µs

(1) t_{LOWR} (low pulse sent by the master) must be short as possible to maximize the master sampling window.
(2) t_{LOW0} must be less than t_{SLOT}.

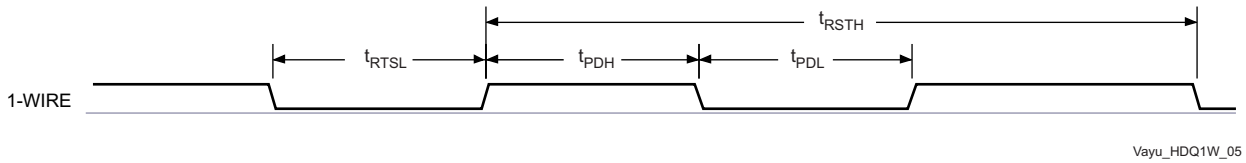

図 7-29. 1-Wire—Break (Reset)

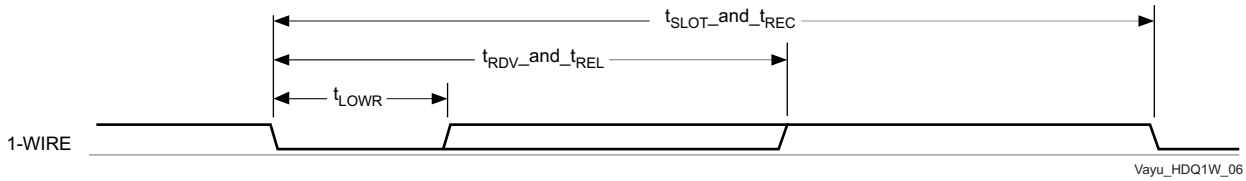

図 7-30. 1-Wire—Read Bit (Data)

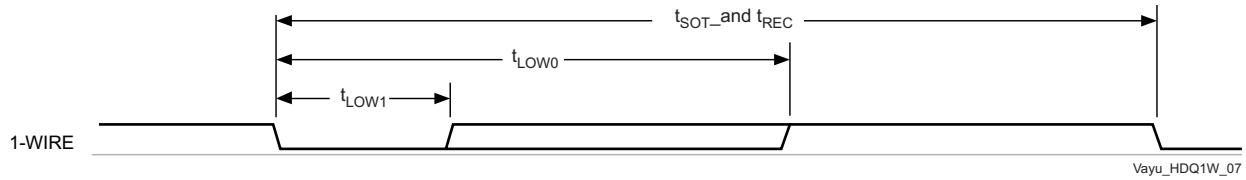

図 7-31. 1-Wire—Write Bit-One Timing (Command / Address or Data)

7.14 Universal Asynchronous Receiver Transmitter (UART)

The UART performs serial-to-parallel conversions on data received from a peripheral device and parallel-to-serial conversion on data received from the CPU. There are 10 UART modules in the device. Only one UART supports IrDA features. Each UART can be used for configuration and data exchange with a number of external peripheral devices or interprocessor communication between devices

The UARTi (where i = 1 to 10) include the following features:

- 16C750 compatibility
- 64-byte FIFO buffer for receiver and 64-byte FIFO for transmitter
- Baud generation based on programmable divisors N (where N = 1…16 384) operating from a fixed functional clock of 48 MHz or 192 MHz
- Break character detection and generation
- Configurable data format:
  - Data bit: 5, 6, 7, or 8 bits
  - Parity bit: Even, odd, none
  - Stop-bit: 1, 1.5, 2 bit(s)
- Flow control: Hardware (RTS/CTS) or software (XON/XOFF)
- Only UART1 module has extended modem control signals (DCD, RI, DTR, DSR)
- Only UART3 supports IrDA

注: For more information, see the UART/IrDA/CIR section of the Device TRM.

表 7-41, 表 7-42 and 図 7-32 assume testing over the recommended operating conditions and electrical characteristic conditions below.

表 7-41. Timing Requirements for UART

NO.	PARAMETER	DESCRIPTION	MIN	MAX	UNIT
4	$t_{w(RX)}$	Pulse width, receive data bit, 15/30/100pF high or low	0.96U(1)	1.05U(1)	ns
5	$t_{w(CTS)}$	Pulse width, receive start bit, 15/30/100pF high or low	0.96U(1)	1.05U(1)	ns
	$t_{d(RTS-TX)}$	Delay time, transmit start bit to transmit data	P(2)		ns
	$t_{d(CTS-TX)}$	Delay time, receive start bit to transmit data	P(2)		ns

(1) U = UART baud time = 1/programmed baud rate

(2) P = Clock period of the reference clock (FCLK, usually 48 MHz or 192MHz).

表 7-42. Switching Characteristics Over Recommended Operating Conditions for UART

NO.	PARAMETER	DESCRIPTION		MIN	MAX	UNIT
	$f_{(baud)}$	Maximum programmable baud rate	15 pF		12	MHz
			30 pF		0.23	
			100 pF		0.115	
2	$t_{w(TX)}$	Pulse width, transmit data bit, 15/30/100 pF high or low		U - 2(1)	U + 2(1)	ns
3	$t_{w(RTS)}$	Pulse width, transmit start bit, 15/30/100 pF high or low		U - 2(1)	U + 2(1)	ns

(1) U = UART baud time = 1/programmed baud rate

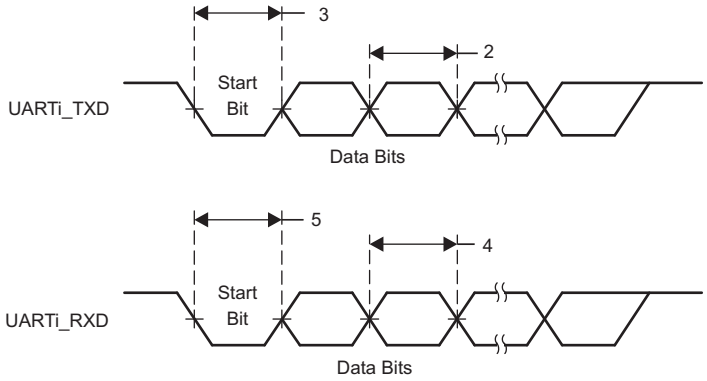

図 7-32. UART Timing

Copyright © 2015–2019, Texas Instruments Incorporated

7.15 Multichannel Serial Peripheral Interface (McSPI)

The McSPI is a master/slave synchronous serial bus. There are four separate McSPI modules (SPI1, SPI2, SPI3, and SPI4) in the device. All these four modules support up to four external devices (four chip selects) and are able to work as both master and slave.

The McSPI modules include the following main features:

- Serial clock with programmable frequency, polarity, and phase for each channel
- Wide selection of SPI word lengths, ranging from 4 to 32 bits
- Up to four master channels, or single channel in slave mode
- Master multichannel mode:
  - Full duplex/half duplex
  - Transmit-only/receive-only/transmit-and-receive modes
  - Flexible input/output (I/O) port controls per channel
  - Programmable clock granularity
  - SPI configuration per channel. This means, clock definition, polarity enabling and word width
- Power management through wake-up capabilities
- Programmable timing control between chip select and external clock generation
- Built-in FIFO available for a single channel.
- Each SPI module supports multiple chip select pins spim_cs[i], where i = 1 to 4.

注: For more information, see the Serial Communication Interface section of the device TRM.

注: The McSPIm module (m = 1 to 4) is also referred to as SPIm.

注意

The IO timings provided in this section are applicable for all combinations of signals for SPI1 and SPI2. However, the timings are only valid for SPI3 and SPI4 if signals within a single IOSET are used. The IOSETS are defined in the 表 7-45.

表 7-43, 図 7-33 and 図 7-34 present Timing Requirements for McSPI - Master Mode.

表 7-43. Timing Requirements for SPI - Master Mode (1)(8)

NO.	PARAMETER	DESCRIPTION	MODE	MIN	MAX	UNIT
SM1	$t_{c(SPICLK)}$	Cycle time, spi_sclk (1) (2)	SPI1/2/3/4	20.8 (3)		ns
SM2	$t_{w(SPICLKL)}$	Typical Pulse duration, spi_sclk low (1)		0.5*P-1 (4)		ns
SM3	$t_{w(SPICLKH)}$	Typical Pulse duration, spi_sclk high (1)		0.5*P-1 (4)		ns
SM4	$t_{su(MISO-SPICLK)}$	Setup time, spi_d[x] valid before spi_sclk active edge (1)		4.4		ns
SM5	$t_{h(SPICLK-MISO)}$	Hold time, spi_d[x] valid after spi_sclk active edge (1)		3.9		ns
SM6	$t_{d(SPICLK-SIMO)}$	Delay time, spi_sclk active edge to spi_d[x] transition (1)	SPI1	-4.27	4.27	ns
			SPI2	-4.32	4.32	ns
			SPI3	-5.37	4.23	ns
			SPI4	-3.81	4..41	ns
SM7	$t_{d(CS-SIMO)}$	Delay time, spi_cs[x] active edge to spi_d[x] transition			5	ns

表 7-43. Timing Requirements for SPI - Master Mode [(1)(8)] (continued)

NO.	PARAMETER	DESCRIPTION	MODE	MIN	MAX	UNIT
SM8	$t_{d(CS-SPICLK)}$	Delay time, spi_cs[x] active to spi_sclk first edge [(1)]	MASTER_PHA0 [(5)]	B-4.6 [(6)]		ns
			MASTER_PHA1 [(5)]	A-4.6 [(7)]		ns
SM9	$t_{d(SPICLK-CS)}$	Delay time, spi_sclk last edge to spi_cs[x] inactive [(1)]	MASTER_PHA0 [(5)]	A-4.6 [(7)]		ns
			MASTER_PHA1 [(5)]	B-4.6 [(6)]		ns

(1) This timing applies to all configurations regardless of SPI_CLK polarity and which clock edges are used to drive output data and capture input data.

(2) Related to the SPI_CLK maximum frequency.

(3) 20.8ns cycle time = 48MHz, 26ns cycle time = 38.4MHz

(4) P = SPICLK period.

(5) SPI_CLK phase is programmable with the PHA bit of the SPI_CH(i)CONF register.

(6) B = (TCS + 0.5) * TSPICLKREF * Fratio, where TCS is a bit field of the SPI_CH(i)CONF register and Fratio = Even ≥2.

(7) When P = 20.8 ns, A = (TCS + 1) * TSPICLKREF, where TCS is a bit field of the SPI_CH(i)CONF register. When P > 20.8 ns, A = (TCS + 0.5) * Fratio * TSPICLKREF, where TCS is a bit field of the SPI_CH(i)CONF register.

(8) The IO timings provided in this section are applicable for all combinations of signals for spi1 and spi2. However, the timings are only valid for spi3 and spi4 if signals within a single IOSET are used. The IOSETs are defined in the following tables.

Copyright © 2015–2019, Texas Instruments Incorporated

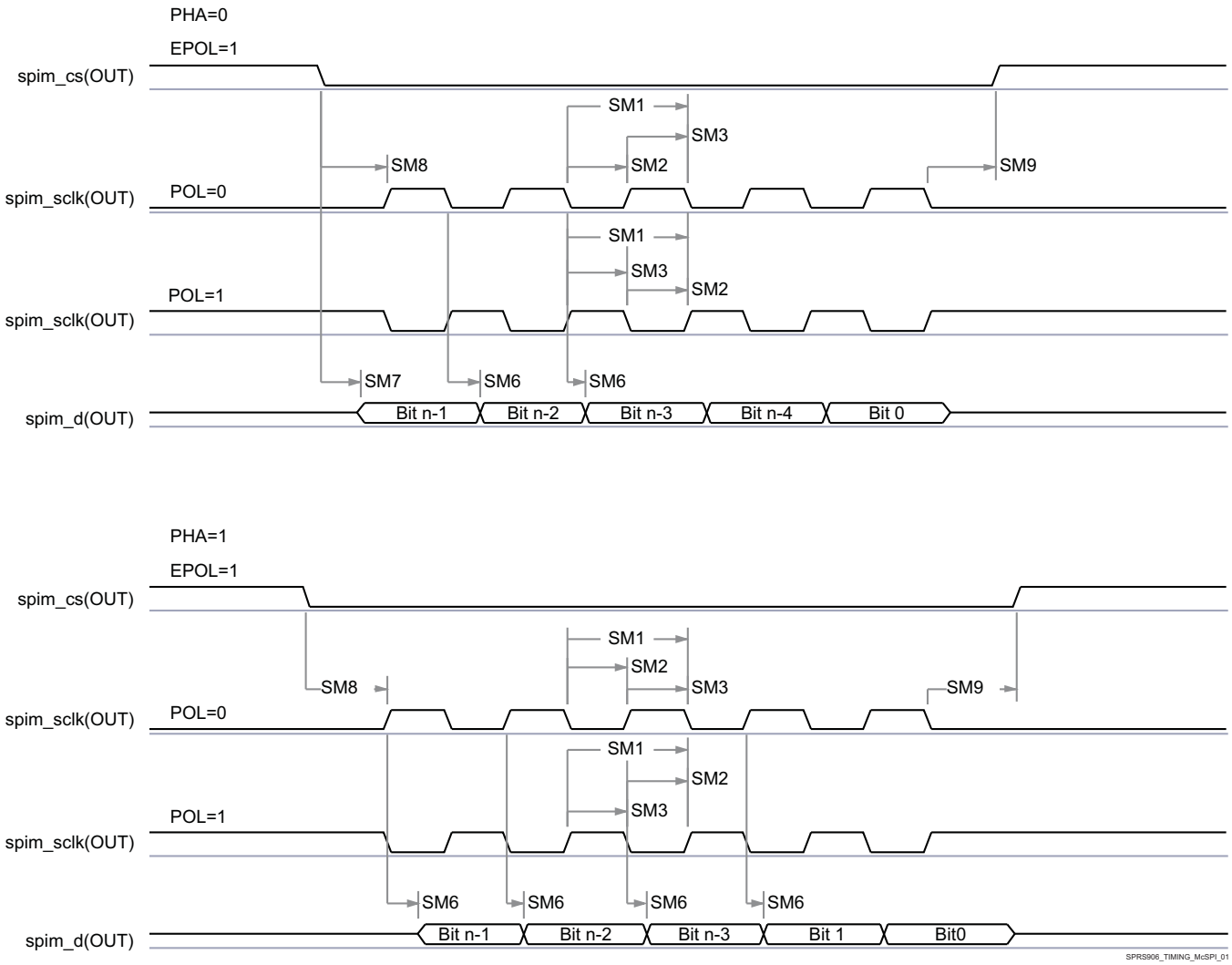

図 7-33. McSPI - Master Mode Transmit

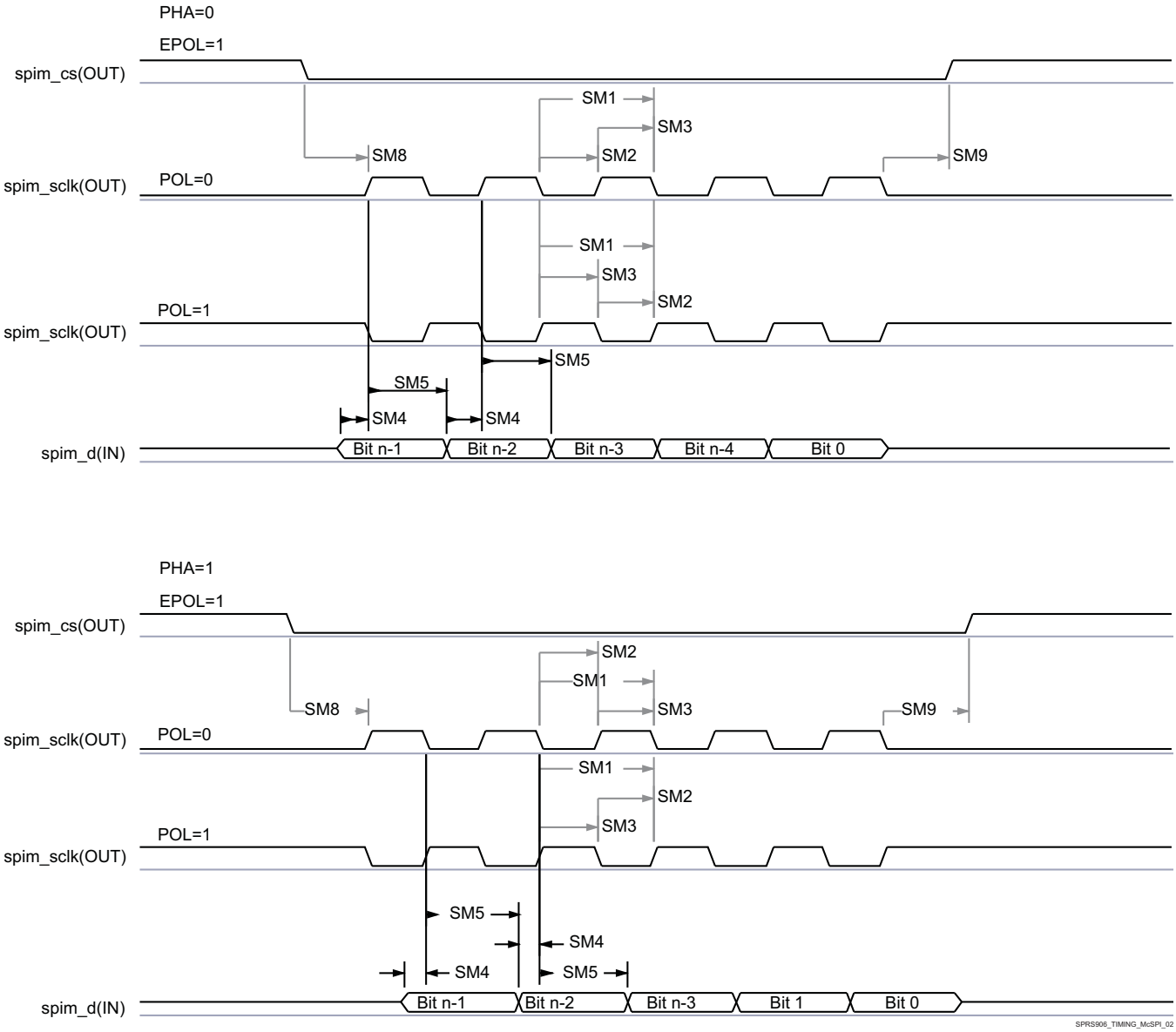

図 7-34. McSPI - Master Mode Receive

表 7-44, 図 7-35 and 図 7-36 present Timing Requirements for McSPI - Slave Mode.

表 7-44. Timing Requirements for SPI - Slave Mode

NO.	PARAMETER	DESCRIPTION	MODE	MIN	MAX	UNIT
SS1	$t_{c(SPICLK)}$	Cycle time, spi_sclk (1) (2)	(3)	62.5		ns
SS2	$t_{w(SPICLKL)}$	Typical Pulse duration, spi_sclk low (1)		0.45*P (4)		ns
SS3	$t_{w(SPICLKH)}$	Typical Pulse duration, spi_sclk high (1)		0.45*P (4)		ns
SS4	$t_{su(SIMO-SPICLK)}$	Setup time, spi_d[x] valid before spi_sclk active edge (1)		5		ns
SS5	$t_{h(SPICLK-SIMO)}$	Hold time, spi_d[x] valid after spi_sclk active edge (1)		5		ns
SS6	$t_{d(SPICLK-SOMI)}$	Delay time, spi_sclk active edge to mcspi_somi transition (1)	SPI1/2/3	2	26.1	ns
			SPI4	2	18	ns
SS7	$t_{d(CS-SOMI)}$	Delay time, spi_cs[x] active edge to mcspi_somi transition (1)			20.95	ns
SS8	$t_{su(CS-SPICLK)}$	Setup time, spi_cs[x] valid before spi_sclk first edge (1)		5		ns
SS9	$t_{h(SPICLK-CS)}$	Hold time, spi_cs[x] valid after spi_sclk last edge (1)		5		ns

Copyright © 2015–2019, Texas Instruments Incorporated

(1) This timing applies to all configurations regardless of SPI_CLK polarity and which clock edges are used to drive output data and capture input data.

(2) When operating the SPI interface in RX-only mode, the minimum Cycle time is 26ns (38.4MHz)

(3) 62.5ns Cycle time = 16 MHz

(4) P = SPICLK period.

(5) PHA = 0; SPI_CLK phase is programmable with the PHA bit of the SPI_CH(i)CONF register.

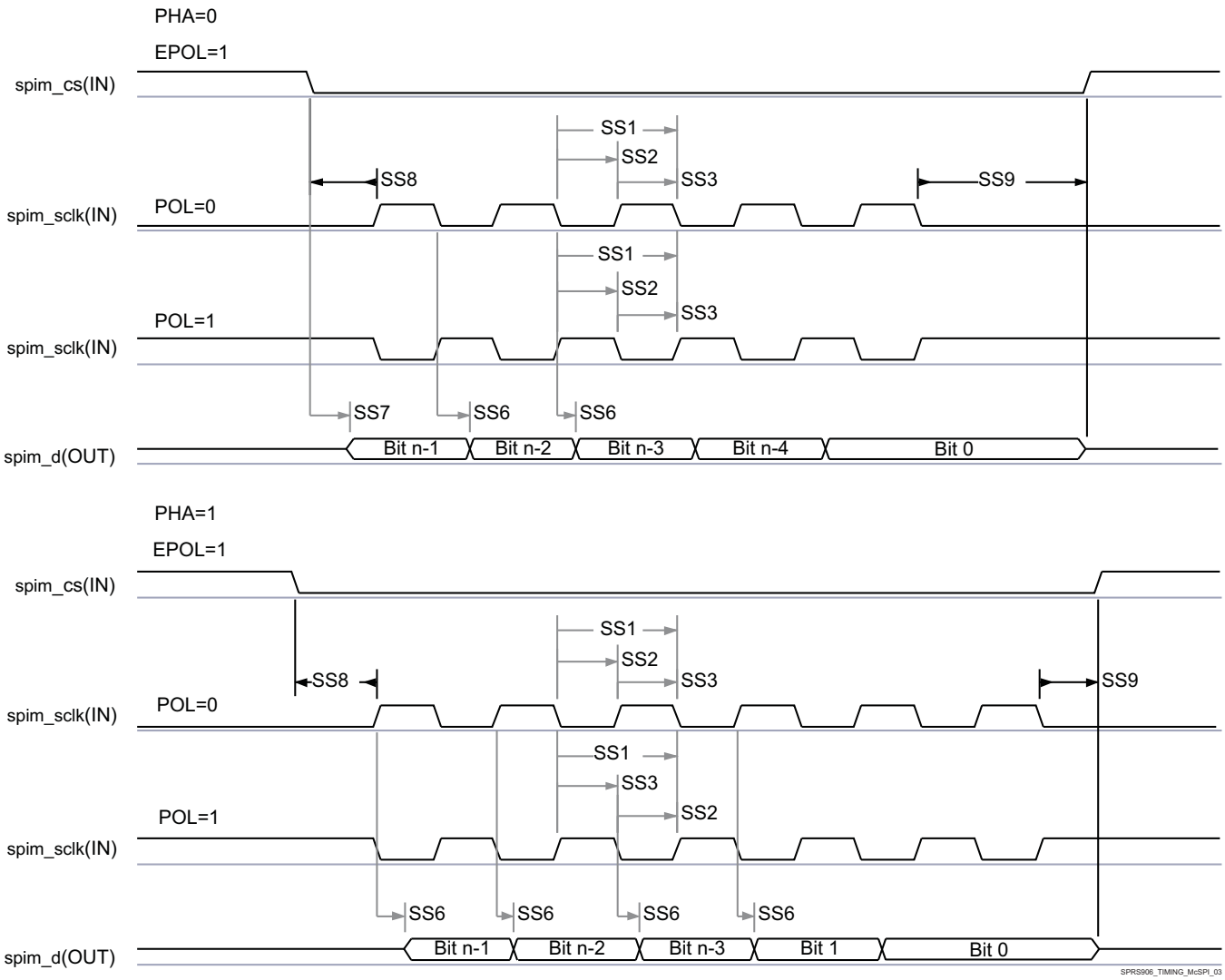

図 7-35. McSPI - Slave Mode Transmit

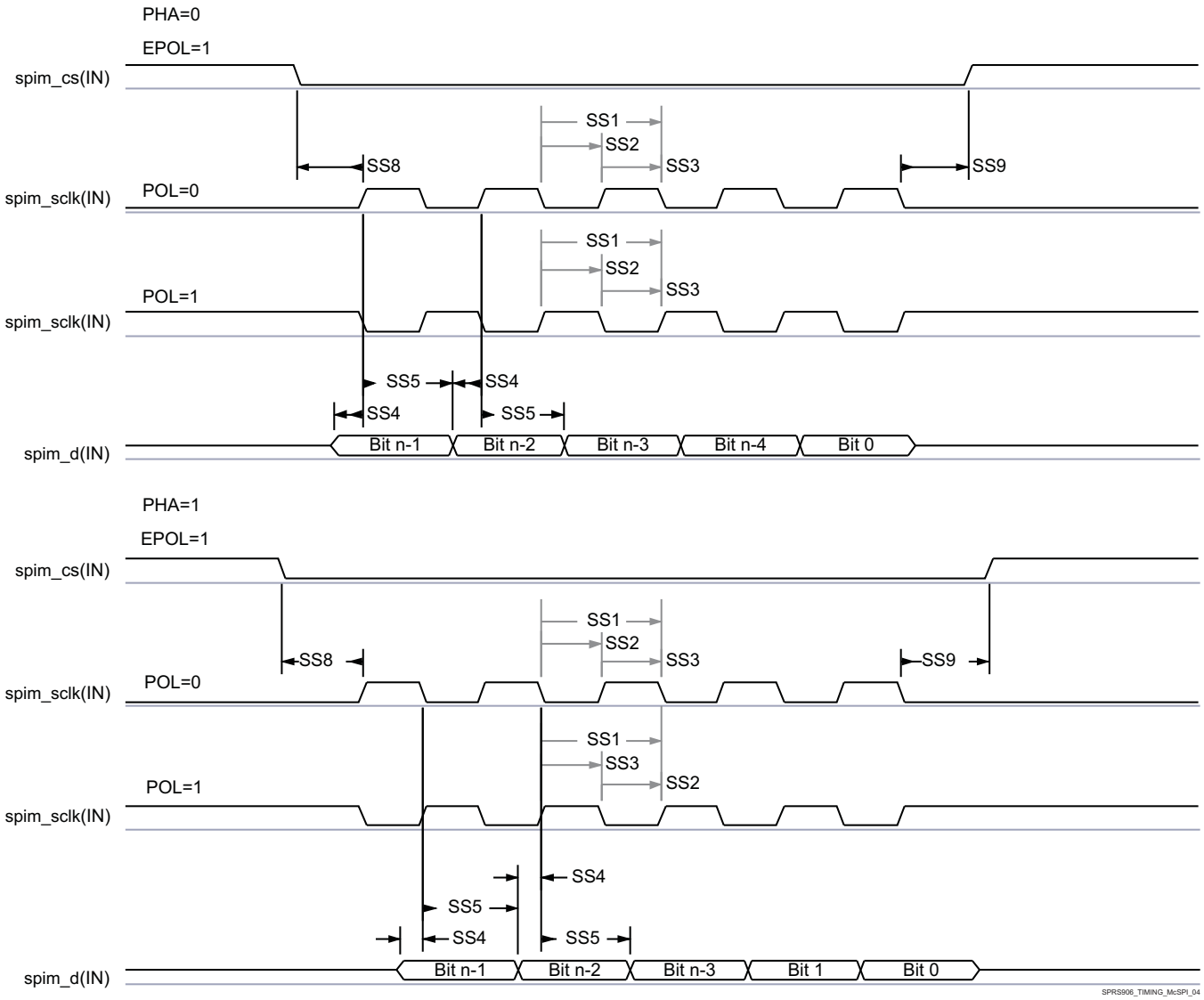

図 7-36. McSPI - Slave Mode Receive

In 表 7-45 are presented the specific groupings of signals (IOSET) for use with SPI3 and SPI4.

表 7-45. McSPI3/4 IOSETs

Signal	IOSET1		IOSET2		IOSET3		IOSET4		IOSET5		IOSET6	
	BALL	MUX	BALL	MUX	BALL	MUX	BALL	MUX	BALL	MUX	BALL	MUX
SPI3												
spi3_sclk	AD9	8	E11	8	V2	7	B12	3	C18	2	AC4	1
spi3_d1	AF9	8	B10	8	Y1	7	A11	3	A21	2	AC7	1
spi3_d0	AE9	8	C11	8	W9	7	B13	3	G16	2	AC6	1
spi3_cs0	AF8	8	D11	8	V9	7	A12	3	D17	2	AC9	1
spi3_cs1	AC3	1	B11	8	AC3	1	E14	3	B11	8	AC3	1
spi3_cs2	-	-	F11	8	-	-	F11	8	F11	8	-	-
spi3_cs3	-	-	A10	8	-	-	A10	8	A10	8	-	-
SPI4												
spi4_sclk	N7	8	G1	8	V7	7	AA3	2	AC8	1	-	-

Copyright © 2015–2019, Texas Instruments Incorporated

表 7-45. McSPI3/4 IOSETs (continued)

Signal	IOSET1		IOSET2		IOSET3		IOSET4		IOSET5		IOSET6	
	BALL	MUX	BALL	MUX	BALL	MUX	BALL	MUX	BALL	MUX	BALL	MUX
spi4_d1	R4	8	G6	8	U7	7	AB9	2	AD6	1	-	-
spi4_d0	N9	8	F2	8	V6	7	AB3	2	AB8	1	-	-
spi4_cs0	P9	8	F3	8	U6	7	AA4	2	AB5	1	-	-
spi4_cs1	P4	8	P4	8	Y1	8	Y1	8	Y1	8	-	-
spi4_cs2	R3	8	R3	8	W9	8	W9	8	W9	8	-	-
spi4_cs3	T2	8	T2	8	V9	8	V9	8	V9	8	-	-

7.16 Quad Serial Peripheral Interface (QSPI)

The Quad SPI (QSPI) module is a type of SPI module that allows single, dual or quad read access to external SPI devices. This module has a memory mapped register interface, which provides a direct interface for accessing data from external SPI devices and thus simplifying software requirements. It works as a master only. There is one QSPI module in the device and it is primary intended for fast booting from quad-SPI flash memories.

General SPI features:

- Programmable clock divider
- Six pin interface (DCLK, CS_N, DOUT, DIN, QDIN1, QDIN2)
- 4 external chip select signals
- Support for 3-, 4- or 6-pin SPI interface
- Programmable CS_N to DOUT delay from 0 to 3 DCLKs
- Programmable signal polarities
- Programmable active clock edge
- Software controllable interface allowing for any type of SPI transfer

注: For more information, see the Quad Serial Peripheral Interface section of the Device TRM.

注意

The IO Timings provided in this section are only valid for some QSPI usage modes when the corresponding Virtual IO Timings or Manual IO Timings are configured as described in the tables found in this section.

注意

The IO Timings provided in this section are only valid when all QSPI Chip Selects used in a system are configured to use the same Clock Mode (either Clock Mode 0 or Clock Mode3).

表 7-46 and 表 7-47 present Timing and Switching Characteristics for Quad SPI Interface.

表 7-46. Switching Characteristics for QSPI

No	PARAMETER	DESCRIPTION	Mode	MIN	MAX	UNIT
Q1	$t_{c(SCLK)}$	Cycle time, sclk	Default Timing Mode, Clock Mode 0	13.02		ns
			Default Timing Mode, Clock Mode 3	20.8		ns
Q2	$t_{w(SCLKL)}$	Pulse duration, sclk low		Y*P-1 (1)		ns
Q3	$t_{w(SCLKH)}$	Pulse duration, sclk high		Y*P-1 (1)		ns
Q4	$t_{d(CS-SCLK)}$	Delay time, sclk falling edge to cs active edge, CS3:0	Default Timing Mode	-M*P-2.0 (2) (3)	-M*P+2.0 (2) (3)	ns
Q5	$t_{d(SCLK-CS)}$	Delay time, sclk falling edge to cs inactive edge, CS3:0	Default Timing Mode	N*P-2.0 (2) (3)	N*P+2.0 (2) (3)	ns
Q6	$t_{d(SCLK-D1)}$	Delay time, sclk falling edge to d[0] transition	Default Timing Mode	-2	2	ns
Q7	$t_{ena(CS-D1LZ)}$	Enable time, cs active edge to d[0] driven (lo-z)		-P-3.5	-P+2.5	ns
Q8	$t_{dis(CS-D1Z)}$	Disable time, cs active edge to d[0] tri-stated (hi-z)		-P-2.5	-P+2.0	ns
Q9	$t_{d(SCLK-D0)}$	Delay time, sclk first falling edge to first d[0] transition	PHA=0 Only, Default Timing Mode	-2.45 - P	1 .45 - P	ns

(1) The Y parameter is defined as follows:

If DCLK_DIV is 0 or ODD then, Y equals 0.5.

If DCLK_DIV is EVEN then, Y equals (DCLK_DIV/2) / (DCLK_DIV+1).

For best performance, it is recommended to use a DCLK_DIV of 0 or ODD to minimize the duty cycle distortion. The HSDIVIDER on CLKOUTX2_H13 output of DPLL_PER can be used to achieve the desired clock divider ratio. All required details about clock division factor DCLK_DIV can be found in the device TRM.

(2) P = SCLK period.

(3) M=QSPI_SPI_DC_REG.DDx + 1 when Clock Mode 0.

M=QSPI_SPI_DC_REG.DDx when Clock Mode 3.

N = 2 when Clock Mode 0.

N = 3 when Clock Mode 3.

Copyright © 2015–2019, Texas Instruments Incorporated

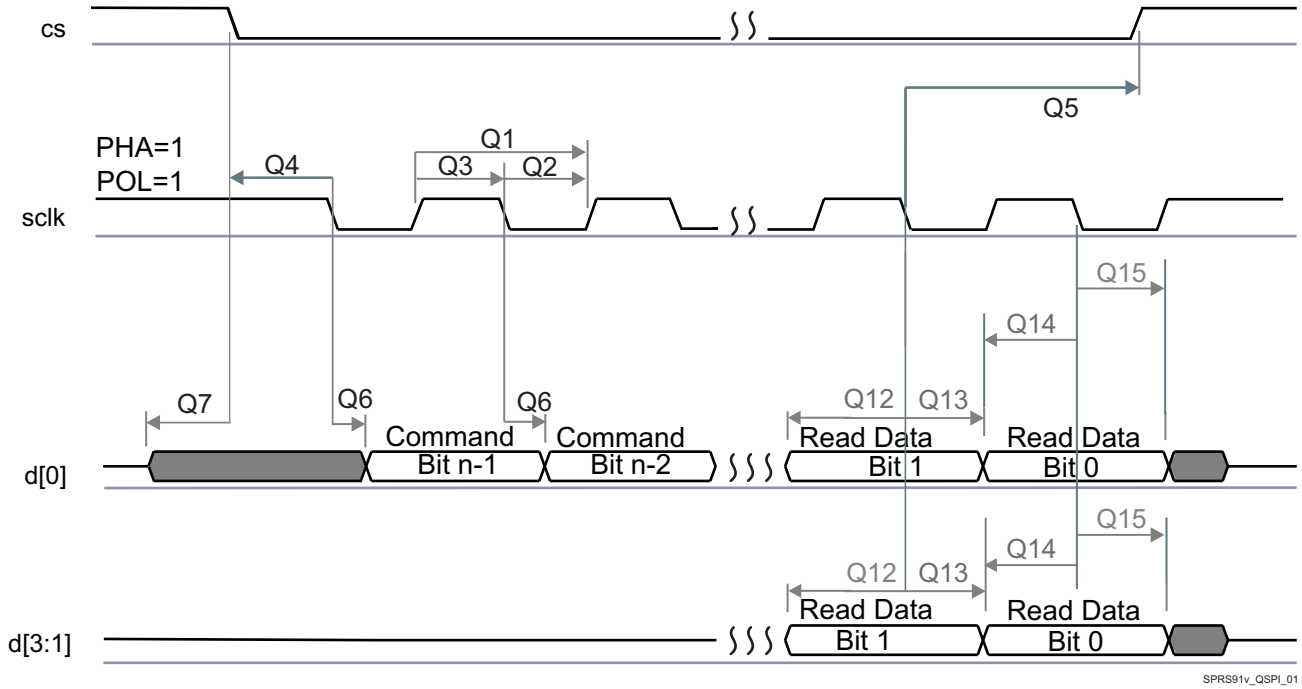

図 7-37. QSPI Read (Clock Mode 3)

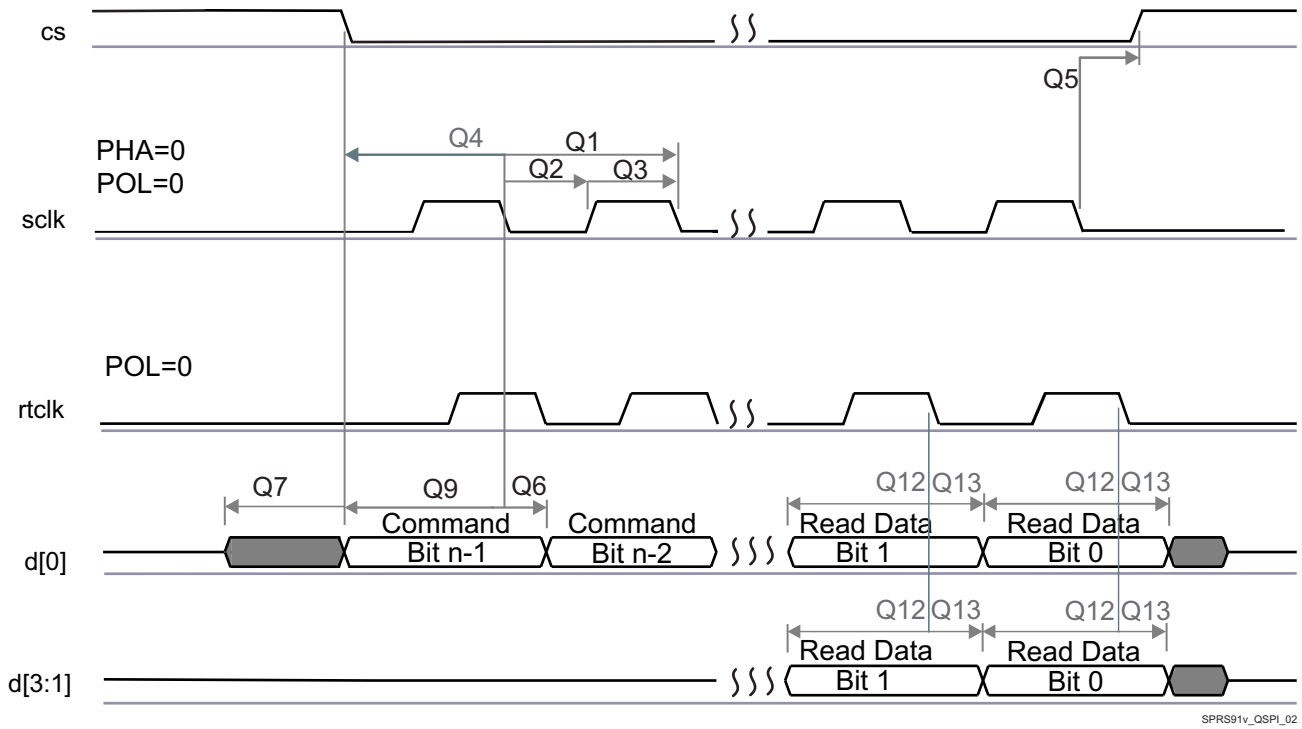

図 7-38. QSPI Read (Clock Mode 0)

注意

The IO Timings provided in this section are only valid for some QSPI usage modes when the corresponding Virtual IO Timings or Manual IO Timings are configured as described in the tables found in this section.

表 7-47. Timing Requirements for QSPI

No	PARAMETER	DESCRIPTION	Mode	MIN	MAX	UNIT
Q12	$t_{su(D-RTCLK)}$	Setup time, d[3:0] valid before falling rtclk edge	Default Timing Mode, Clock Mode 0	5.1		ns
	$t_{su(D-SCLK)}$	Setup time, d[3:0] valid before falling sclk edge	Default Timing Mode, Clock Mode 3	12.3		ns
Q13	$t_{h(RTCLK-D)}$	Hold time, d[3:0] valid after falling rtclk edge	Default Timing Mode, Clock Mode 0	-0.1		ns
	$t_{h(SCLK-D)}$	Hold time, d[3:0] valid after falling sclk edge	Default Timing Mode, Clock Mode 3	0		ns
Q14	$t_{su(D-SCLK)}$	Setup time, final d[3:0] bit valid before final falling sclk edge	Default Timing Mode, Clock Mode 3	12.3-P (1)		ns
Q15	$t_{h(SCLK-D)}$	Hold time, final d[3:0] bit valid after final falling sclk edge	Default Timing Mode, Clock Mode 3	0+P (1)		ns

(1) P = SCLK period.

(2) Clock Modes 1 and 2 are not supported.

(3) The Device captures data on the falling clock edge in Clock Mode 0 and 3, as opposed to the traditional rising clock edge. Although nonstandard, the falling-edge-based setup and hold time timings have been designed to be compatible with standard SPI devices that launch data on the falling edge in Clock Modes 0 and 3.

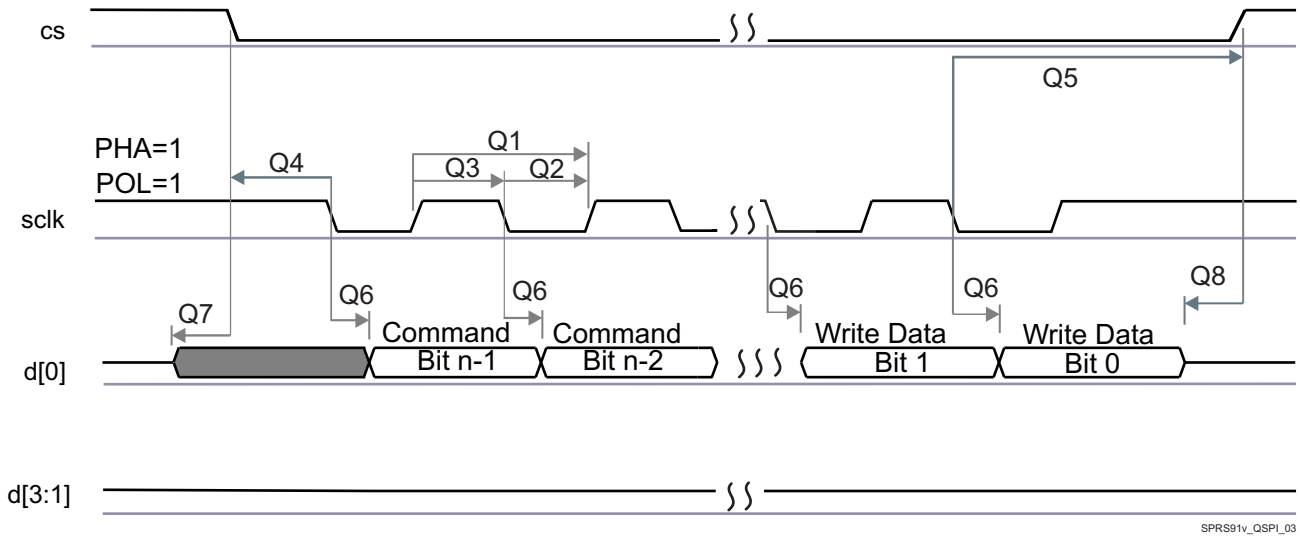

図 7-39. QSPI Write (Clock Mode 3)

Copyright © 2015–2019, Texas Instruments Incorporated

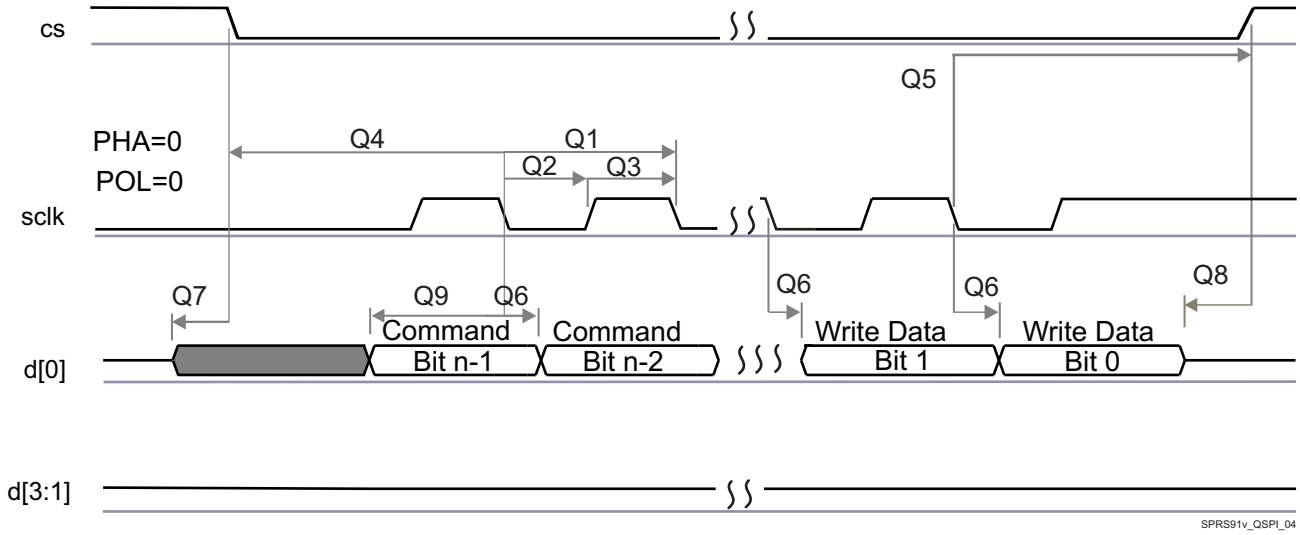

図 7-40. QSPI Write (Clock Mode 0)

注: To configure the desired Manual IO Timing Mode the user must follow the steps described in section Manual IO Timing Modes of the Device TRM.

The associated registers to configure are listed in the **CFG REGISTER** column. For more information see the Control Module chapter in the Device TRM.

Manual IO Timings Modes must be used to ensure some IO timings for QSPI. See 表 7-2 *Modes Summary* for a list of IO timings requiring the use of Manual IO Timings Modes. See 表 7-48 *Manual Functions Mapping for QSPI* for a definition of the Manual modes.

表 7-48 lists the A_DELAY and G_DELAY values needed to calculate the correct values to be set in the CFG_x registers.

表 7-48. Manual Functions Mapping for QSPI

BALL	BALL NAME	QSPI_MODE0_MANUAL1		CFG REGISTER	MUXMODE
		A_DELAY (ps)	G_DELAY (ps)		1
T7	gpmc_a3	114	0	CFG_GPMC_A3_OUT	qspi1_cs2
P6	gpmc_a4	91	0	CFG_GPMC_A4_OUT	qspi1_cs3
R3	gpmc_a13	0	0	CFG_GPMC_A13_IN	qspi1_rtclk
T2	gpmc_a14	2575	966	CFG_GPMC_A14_IN	qspi1_d3
U2	gpmc_a15	2503	889	CFG_GPMC_A15_IN	qspi1_d2
U1	gpmc_a16	2528	1007	CFG_GPMC_A16_IN	qspi1_d0
U1	gpmc_a16	0	0	CFG_GPMC_A16_OUT	qspi1_d0
P3	gpmc_a17	2533	980	CFG_GPMC_A17_IN	qspi1_d1
R2	gpmc_a18	590	0	CFG_GPMC_A18_OUT	qspi1_sclk
P2	gpmc_cs2	0	0	CFG_GPMC_CS2_OUT	qspi1_cs0
P1	gpmc_cs3	70	0	CFG_GPMC_CS3_OUT	qspi1_cs1

7.17 Multichannel Audio Serial Port (McASP)

The multichannel audio serial port (McASP) functions as a general-purpose audio serial port optimized for the needs of multichannel audio applications. The McASP is useful for time-division multiplexed (TDM) stream, Inter-Integrated Sound (I2S) protocols, and inter-component digital audio interface transmission (DIT).

The device have integrated 8 McASP modules (McASP1-McASP8) with:

- McASP1 and McASP2 modules supporting 16 channels with independent TX/RX clock/sync domain
- McASP3 through McASP8 modules supporting 4 channels with independent TX/RX clock/sync domain

注: For more information, see the Multichannel Audio Serial Port section of the Device TRM.

注意

The IO Timings provided in this section are only valid for some McASP usage modes when the corresponding Virtual IO Timings or Manual IO Timings are configured as described in the tables found in this section.

表 7-49, 表 7-50, 表 7-51 and 図 7-41 present Timing Requirements for McASP1 to McASP8.

Copyright © 2015–2019, Texas Instruments Incorporated

表 7-49. Timing Requirements for McASP1 (1)

NO.	PARAMETER	DESCRIPTION	MODE	MIN	MAX	UNIT
1	$t_{c(AHCLKRX)}$	Cycle time, AHCLKR/X		20		ns
2	$t_{w(AHCLKRX)}$	Pulse duration, AHCLKR/X high or low		0.35P (2)		ns
3	$t_{c(ACLKRX)}$	Cycle time, ACLKR/X		20		ns
4	$t_{w(ACLKRX)}$	Pulse duration, ACLKR/X high or low		0.5R - 3 (3)		ns
5	$t_{su(AFSRX-ACLK)}$	Setup time, AFSR/X input valid before ACLKR/X	ACLKR/X int	20		ns
			ACLKR/X ext in ACLKR/X ext out	4		ns
6	$t_{h(ACLK-AFSRX)}$	Hold time, AFSR/X input valid after ACLKR/X	ACLKR/X int	-1		ns
			ACLKR/X ext in ACLKR/X ext out	2.21		ns
7	$t_{su(AXR-ACLK)}$	Setup time, AXR input valid before ACLKR/X	ACLKR/X int	21.9		ns
			ACLKR/X ext in ACLKR/X ext out	4.42		ns
8	$t_{h(ACLK-AXR)}$	Hold time, AXR input valid after ACLKR/X	ACLKR/X int	-1		ns
			ACLKR/X ext in ACLKR/X ext out	2.52		ns

(1) ACLKR internal: ACLKRCTL.CLKRM=1, PDIR.ACLKR = 1
ACLKR external input: ACLKRCTL.CLKRM=0, PDIR.ACLKR=0
ACLKR external output: ACLKRCTL.CLKRM=0, PDIR.ACLKR=1
ACLKX internal: ACLKXCTL.CLKXM=1, PDIR.ACLKX = 1
ACLKX external input: ACLKXCTL.CLKXM=0, PDIR.ACLKX=0
ACLKX external output: ACLKXCTL.CLKXM=0, PDIR.ACLKX=1

(2) P = AHCLKR/X period in ns.

(3) R = ACLKR/X period in ns.

表 7-50. Timing Requirements for McASP2 (1)

NO.	PARAMETER	DESCRIPTION	MODE	MIN	MAX	UNIT
1	$t_{c(AHCLKRX)}$	Cycle time, AHCLKR/X		20		ns
2	$t_{w(AHCLKRX)}$	Pulse duration, AHCLKR/X high or low		0.35P (2)		ns
3	$t_{c(ACLKRX)}$	Cycle time, ACLKR/X	Any Other Conditions	20		ns
			ACLKX/AFSX (In Sync Mode), ACLKR/AFSR (In Async Mode), and AXR are all inputs "80M" Virtual IO Timing Mode	12.5		ns
4	$t_{w(ACLKRX)}$	Pulse duration, ACLKR/X high or low	Any Other Conditions	0.5R - 3 (3)		ns
			ACLKX/AFSX (In Sync Mode), ACLKR/AFSR (In Async Mode), and AXR are all inputs "80M" Virtual IO Timing Modes	0.38R (3)		ns
5	$t_{su(AFSRX-ACLK)}$	Setup time, AFSR/X input valid before ACLKR/X	ACLKR/X int	20.7		ns
			ACLKR/X ext in ACLKR/X ext out	3.9		ns
			ACLKR/X ext in ACLKR/X ext out "80M" Virtual IO Timing Modes	3		ns

表 7-50. Timing Requirements for McASP2 (1) (continued)

NO.	PARAMETER	DESCRIPTION	MODE	MIN	MAX	UNIT
6	$t_{h(ACLK-AFSRX)}$	Hold time, AFSR/X input valid after ACLKR/X	ACLKR/X int	-1		ns
			ACLKR/X ext in ACLKR/X ext out	3.2		ns
			ACLKR/X ext in ACLKR/X ext out "80M" Virtual IO Timing Modes	3		ns
7	$t_{su(AXR-ACLK)}$	Setup time, AXR input valid before ACLKR/X	ACLKR/X int	21.4		ns
			ACLKR/X ext in ACLKR/X ext out	3.9		ns
			ACLKR/X ext in ACLKR/X ext out "80M" Virtual IO Timing Modes	3		ns
8	$t_{h(ACLK-AXR)}$	Hold time, AXR input valid after ACLKR/X	ACLKR/X int	-1		ns
			ACLKR/X ext in ACLKR/X ext out	3.2		ns
			ACLKR/X ext in ACLKR/X ext out "80M" Virtual IO Timing Modes	3		ns

(1) ACLKR internal: ACLKRCTL.CLKRM=1, PDIR.ACLKR = 1
ACLKR external input: ACLKRCTL.CLKRM=0, PDIR.ACLKR=0
ACLKR external output: ACLKRCTL.CLKRM=0, PDIR.ACLKR=1
ACLKX internal: ACLKXCTL.CLKXM=1, PDIR.ACLKX = 1
ACLKX external input: ACLKXCTL.CLKXM=0, PDIR.ACLKX=0
ACLKX external output: ACLKXCTL.CLKXM=0, PDIR.ACLKX=1

(2) P = AHCLKR/X period in ns.

(3) R = ACLKR/X period in ns.

表 7-51. Timing Requirements for McASP3/4/5/6/7/8 (1)

NO.	PARAMETER	DESCRIPTION	MODE	MIN	MAX	UNIT
1	$t_{c(AHCLKRX)}$	Cycle time, AHCLKR/X		20		ns
2	$t_{w(AHCLKRX)}$	Pulse duration, AHCLKR/X high or low		0.35P (2)		ns
3	$t_{c(ACLKRX)}$	Cycle time, ACLKR/X		20		ns
4	$t_{w(ACLKRX)}$	Pulse duration, ACLKR/X high or low		0.5R - 3 (3)		ns
5	$t_{su(AFSRX-ACLK)}$	Setup time, AFSR/X input valid before ACLKR/X	ACLKR/X int	20.2		ns
			ACLKR/X ext in ACLKR/X ext out	4.9		ns
6	$t_{h(ACLK-AFSRX)}$	Hold time, AFSR/X input valid after ACLKR/X	ACLKR/X int	-1		ns
			ACLKR/X ext in ACLKR/X ext out	2.26		ns
	$t_{su(AXR-ACLK)}$	Setup time, AXR input valid before ACLKX	ACLKX int (ASYNC=0)	20.8		ns
			ACLKR/X ext in ACLKR/X ext out	5.75		ns
8	$t_{h(ACLK-AXR)}$	Hold time, AXR input valid after ACLKX	ACLKX int (ASYNC=0)	-0.9		ns
			ACLKR/X ext in ACLKR/X ext out	2.87		ns

Copyright © 2015–2019, Texas Instruments Incorporated

(1) ACLKR internal: ACLKRCTL.CLKRM=1, PDIR.ACLKR = 1 (NOT SUPPORTED)
ACLKR external input: ACLKRCTL.CLKRM=0, PDIR.ACLKR=0
ACLKR external output: ACLKRCTL.CLKRM=0, PDIR.ACLKR=1
ACLKX internal: ACLKXCTL.CLKXM=1, PDIR.ACLKX = 1
ACLKX external input: ACLKXCTL.CLKXM=0, PDIR.ACLKX=0
ACLKX external output: ACLKXCTL.CLKXM=0, PDIR.ACLKX=1

(2) P = AHCLKR/X period in ns.

(3) R = ACLKR/X period in ns.

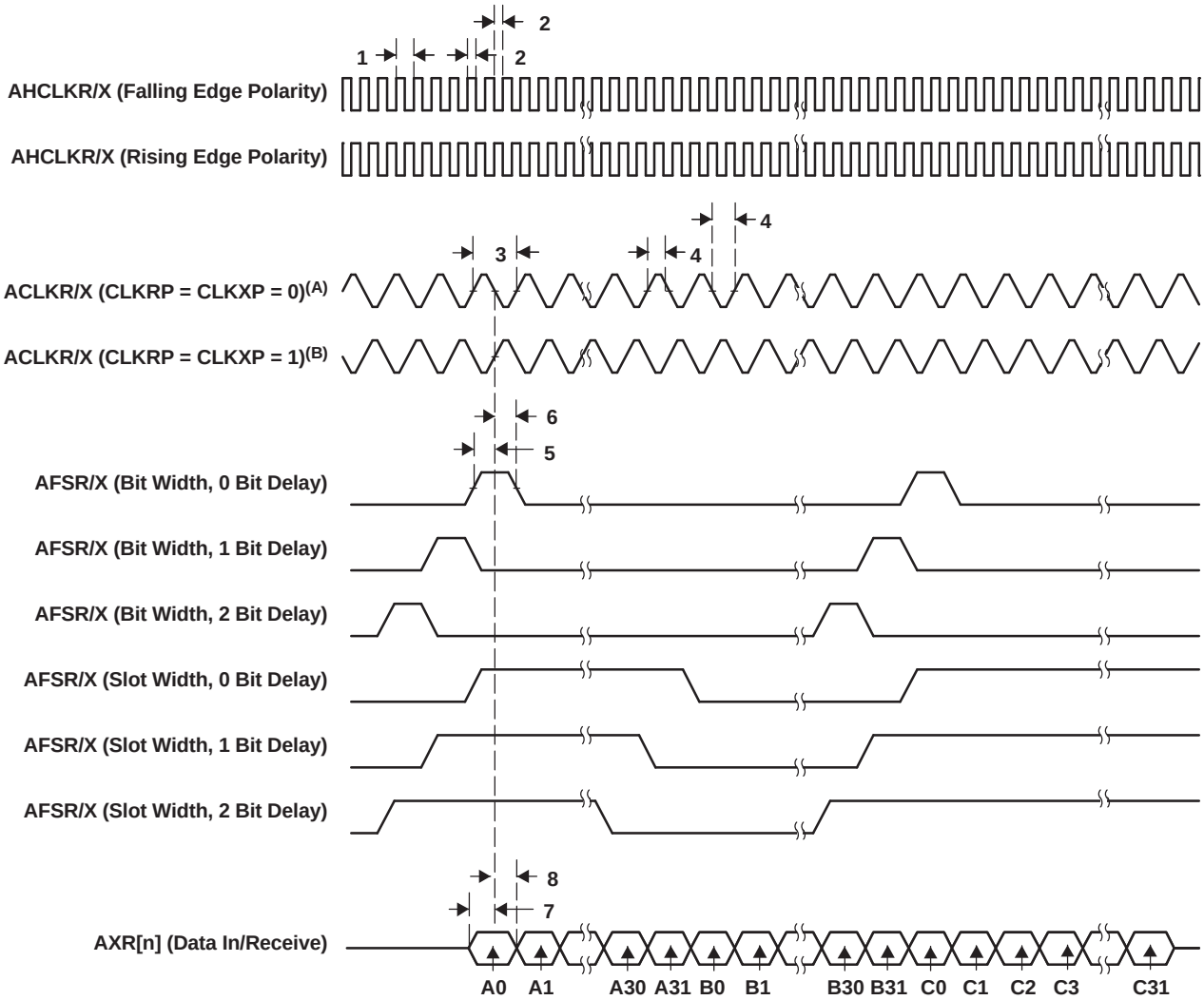

A. For CLKRP = CLKXP = 0, the McASP transmitter is configured for rising edge (to shift data out) and the McASP receiver is configured for falling edge (to shift data in).

B. For CLKRP = CLKXP = 1, the McASP transmitter is configured for falling edge (to shift data out) and the McASP receiver is configured for rising edge (to shift data in).

図 7-41. McASP Input Timing

> 注意
>
> The IO Timings provided in this section are only valid for some McASP usage modes when the corresponding Virtual IO Timings or Manual IO Timings are configured as described in the tables found in this section.

表 7-52, 表 7-53, 表 7-54 and 図 7-42 present Switching Characteristics Over Recommended Operating Conditions for McASP1 to McASP8.

表 7-52. Switching Characteristics Over Recommended Operating Conditions for McASP1 (1)

NO.	PARAMETER	DESCRIPTION	MODE	MIN	MAX	UNIT
9	$t_{c(AHCLKRX)}$	Cycle time, AHCLKR/X		20		ns
10	$t_{w(AHCLKRX)}$	Pulse duration, AHCLKR/X high or low		0.5P - 2.5 (2)		ns
11	$t_{c(ACLKRX)}$	Cycle time, ACLKR/X		20		ns
12	$t_{w(ACLKRX)}$	Pulse duration, ACLKR/X high or low		0.5P - 2.5 (3)		ns
13	$t_{d(ACLK-AFSXR)}$	Delay time, ACLKR/X transmit edge to AFSX/R output valid	ACLKR/X int	-0.21	6	ns
			ACLKR/X ext in ACLKR/X ext out	2	23.9	ns
14	$t_{d(ACLK-AXR)}$	Delay time, ACLKR/X transmit edge to AXR output valid	ACLKR/X int	-1.8	6.9	ns
			ACLKR/X ext in ACLKR/X ext out	2	25.6	ns

(1) ACLKR internal: ACLKRCTL.CLKRM=1, PDIR.ACLKR = 1
ACLKR external input: ACLKRCTL.CLKRM=0, PDIR.ACLKR=0
ACLKR external output: ACLKRCTL.CLKRM=0, PDIR.ACLKR=1
ACLKX internal: ACLKXCTL.CLKXM=1, PDIR.ACLKX = 1
ACLKX external input: ACLKXCTL.CLKXM=0, PDIR.ACLKX=0
ACLKX external output: ACLKXCTL.CLKXM=0, PDIR.ACLKX=1
(2) P = AHCLKR/X period in ns.
(3) R = ACLKR/X period in ns.

表 7-53. Switching Characteristics Over Recommended Operating Conditions for McASP2 (1)

NO.	PARAMETER	DESCRIPTION	MODE	MIN	MAX	UNIT
9	$t_{c(AHCLKRX)}$	Cycle time, AHCLKR/X		20		ns
10	$t_{w(AHCLKRX)}$	Pulse duration, AHCLKR/X high or low		0.5P - 2.5 (2)		ns
11	$t_{c(ACLKRX)}$	Cycle time, ACLKR/X		20		ns
12	$t_{w(ACLKRX)}$	Pulse duration, ACLKR/X high or low		0.5P - 2.5 (3)		ns
13	$t_{d(ACLK-AFSXR)}$	Delay time, ACLKR/X transmit edge to AFSX/R output valid	ACLKR/X int	0	6	ns
			ACLKR/X ext in ACLKR/X ext out	2	25.2	ns
14	$t_{d(ACLK-AXR)}$	Delay time, ACLKR/X transmit edge to AXR output valid	ACLKR/X int	-1.29	6.11	ns
			ACLKR/X ext in ACLKR/X ext out	2	24.8	ns

(1) ACLKR internal: ACLKRCTL.CLKRM=1, PDIR.ACLKR = 1
ACLKR external input: ACLKRCTL.CLKRM=0, PDIR.ACLKR=0
ACLKR external output: ACLKRCTL.CLKRM=0, PDIR.ACLKR=1
ACLKX internal: ACLKXCTL.CLKXM=1, PDIR.ACLKX = 1
ACLKX external input: ACLKXCTL.CLKXM=0, PDIR.ACLKX=0
ACLKX external output: ACLKXCTL.CLKXM=0, PDIR.ACLKX=1
(2) P = AHCLKR/X period in ns.
(3) R = ACLKR/X period in ns.

表 7-54. Switching Characteristics Over Recommended Operating Conditions for McASP3/4/5/6/7/8 (1)

NO.	PARAMETER	DESCRIPTION	MODE	MIN	MAX	UNIT
9	$t_{c(AHCLKRX)}$	Cycle time, AHCLKR/X		20		ns

Copyright © 2015–2019, Texas Instruments Incorporated

表 7-54. Switching Characteristics Over Recommended Operating Conditions for McASP3/4/5/6/7/8 [(1)] (continued)

NO.	PARAMETER	DESCRIPTION	MODE	MIN	MAX	UNIT
10	$t_{w(AHCLKRX)}$	Pulse duration, AHCLKR/X high or low		0.5P - 2.5 [(2)]		ns
11	$t_{c(ACLKRX)}$	Cycle time, ACLKR/X		20		ns
12	$t_{w(ACLKRX)}$	Pulse duration, ACLKR/X high or low		0.5P - 2.5 [(3)]		ns
13	$t_{d(ACLK-AFSXR)}$	Delay time, ACLKR/X transmit edge to AFSX/R output valid	ACLKR/X int	-0.74	6	ns
			ACLKR/X ext in ACLKR/X ext out	2	26.4	ns
14	$t_{d(ACLK-AXR)}$	Delay time, ACLKR/X transmit edge to AXR output valid	ACLKR/X int	-1.68	6.97	ns
			ACLKR/X ext in ACLKR/X ext out	1.07	25.9	ns

(1) ACLKR internal: ACLKRCTL.CLKRM=1, PDIR.ACLKR = 1
ACLKR external input: ACLKRCTL.CLKRM=0, PDIR.ACLKR=0
ACLKR external output: ACLKRCTL.CLKRM=0, PDIR.ACLKR=1
ACLKX internal: ACLKXCTL.CLKXM=1, PDIR.ACLKX = 1
ACLKX external input: ACLKXCTL.CLKXM=0, PDIR.ACLKX=0
ACLKX external output: ACLKXCTL.CLKXM=0, PDIR.ACLKX=1

(2) P = AHCLKR/X period in ns.

(3) R = ACLKR/X period in ns.

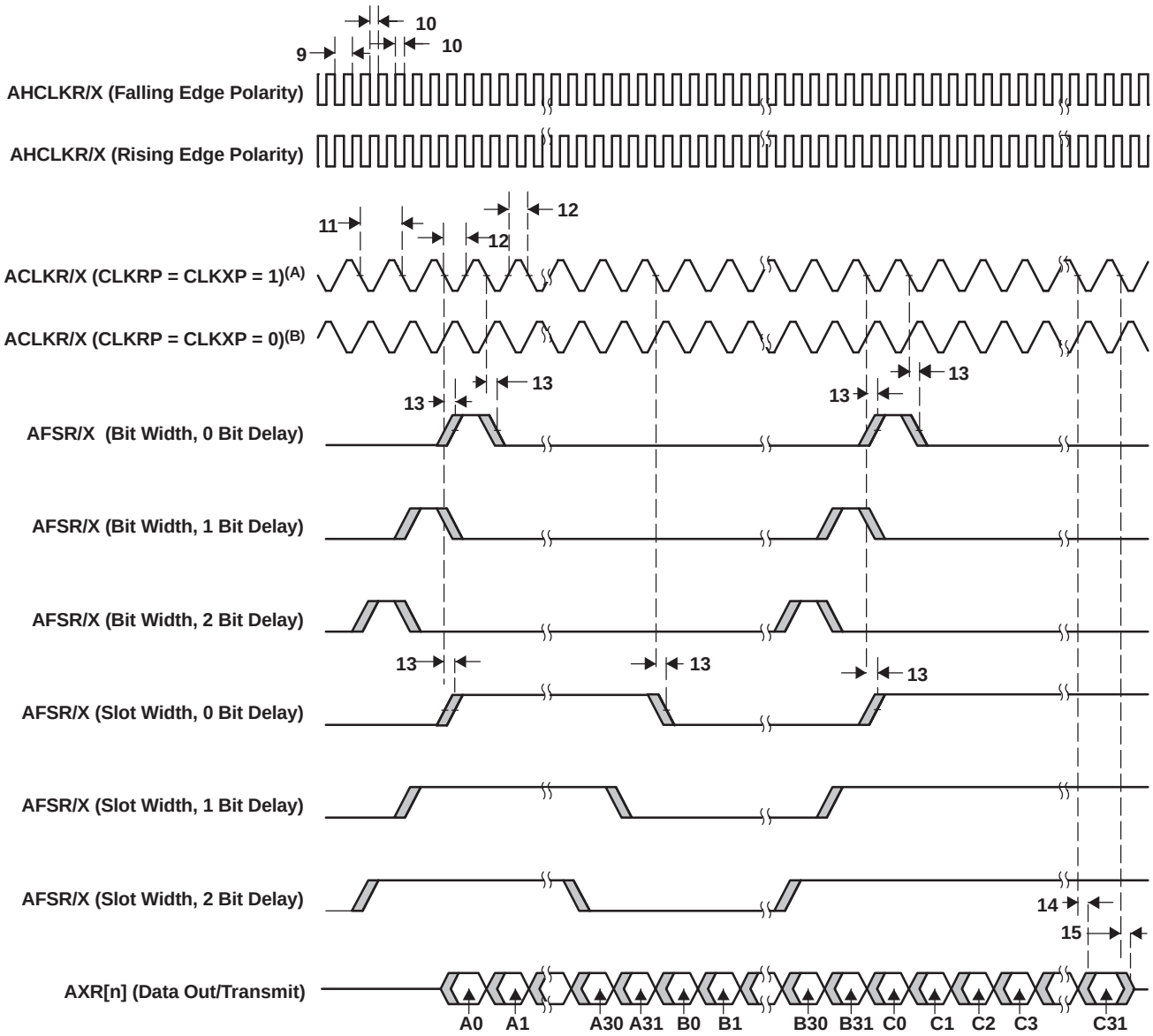

A. For CLKRP = CLKXP = 1, the McASP transmitter is configured for falling edge (to shift data out) and the McASP receiver is configured for rising edge (to shift data in).

B. For CLKRP = CLKXP = 0, the McASP transmitter is configured for rising edge (to shift data out) and the McASP receiver is configured for falling edge (to shift data in).

図 7-42. McASP Output Timing

注: To configure the desired virtual mode the user must set MODESELECT bit and DELAYMODE bitfield for each corresponding pad control register.

The pad control registers are presented in 表 4-3 and described in Device TRM, *Chapter 18 - Control Module*.

表 7-55 through 表 7-62 explain all cases with Virtual Mode Details for McASP1/2/3/4/5/6/7/8 (see 図 7-43 through 図 7-50).

Copyright © 2015–2019, Texas Instruments Incorporated

表 7-55. Virtual Mode Case Details for McASP1

No.	CASE	CASE Description	Virtual Mode Settings		Notes
			Signals	Virtual Mode Value	
IP Mode : ASYNC					
1	COIFOI	CLKX / FSX: Output CLKR / FSR: Input	AXR(Outputs)/CLKX/FSX	Default (No Virtual Mode)	See 図 7-43
			AXR(Inputs)/CLKR/FSR	MCASP1_VIRTUAL3_ASYNC_RX	
2	COIFIO	CLKX / FSR: Output CLKR / FSX: Input	AXR(Outputs)/CLKX/FSX	Default (No Virtual Mode)	See 図 7-44
			AXR(Inputs)/CLKR/FSR	MCASP1_VIRTUAL3_ASYNC_RX	
3	CIOFIO	CLKR / FSR: Output CLKX / FSX: Input	AXR(Outputs)/CLKX/FSX	MCASP1_VIRTUAL3_ASYNC_RX	See 図 7-45
			AXR(Inputs)/CLKR/FSR	MCASP1_VIRTUAL1_ASYNC_TX	
4	CIOFOI	CLKR / FSX: Output CLKX / FSR: Input	AXR(Outputs)/CLKX/FSX	MCASP1_VIRTUAL3_ASYNC_RX	See 図 7-46
			AXR(Inputs)/CLKR/FSR	MCASP1_VIRTUAL1_ASYNC_TX	
IP Mode : SYNC (CLKR / FSR internally generated from CLKX / FSX)					
5	CO-FO-	CLKX / FSX: Output	AXR(Outputs)/CLKX/FSX	Default (No Virtual Mode)	See 図 7-47
			AXR(Inputs)/CLKX/FSX	Default (No Virtual Mode)	
6	CI-FO-	FSX: Output CLKX: Input	AXR(Outputs)/CLKX/FSX	MCASP1_VIRTUAL2_SYNC_RX	See 図 7-48
			AXR(Inputs)/CLKX/FSX	MCASP1_VIRTUAL2_SYNC_RX	
7	CI-FI-	CLKX / FSX: Input	AXR(Outputs)/CLKX/FSX	MCASP1_VIRTUAL2_SYNC_RX	See 図 7-49
			AXR(Inputs)/CLKX/FSX	MCASP1_VIRTUAL2_SYNC_RX	
8	CO-FI-	CLKX: Output FSX: Input	AXR(Outputs)/CLKX/FSX	Default (No Virtual Mode)	See 図 7-50
			AXR(Inputs)/CLKX/FSX	Default (No Virtual Mode)	

表 7-56. Virtual Mode Case Details for McASP2

No.	CASE	CASE Description	Virtual Mode Settings		Notes
			Signals	Virtual Mode Value	
IP Mode : ASYNC					
1	COIFOI	CLKX / FSX: Output CLKR / FSR: Input	AXR(Outputs)/CLKX/FSX	Default (No Virtual Mode)(1)	See 図 7-43
			AXR(Inputs)/CLKR/FSR	Default (No Virtual Mode)(1)	
			AXR(Inputs)/CLKR/FSR	MCASP2_VIRTUAL4_ASYNC_RX_80M (2)	
2	COIFIO	CLKX / FSR: Output CLKR / FSX: Input	AXR(Outputs)/CLKX/FSX	Default (No Virtual Mode)	See 図 7-44
			AXR(Inputs)/CLKR/FSR	MCASP2_VIRTUAL2_ASYNC_RX	
3	CIOFIO	CLKR / FSR: Output CLKX / FSX: Input	AXR(Outputs)/CLKX/FSX	MCASP2_VIRTUAL2_ASYNC_RX	See 図 7-45
			AXR(Inputs)/CLKR/FSR	Default (No Virtual Mode)	
4	CIOFOI	CLKR / FSX: Output CLKX / FSR: Input	AXR(Outputs)/CLKX/FSX	MCASP2_VIRTUAL2_ASYNC_RX	See 図 7-46
			AXR(Inputs)/CLKR/FSR	Default (No Virtual Mode)	
IP Mode : SYNC (CLKR / FSR internally generated from CLKX / FSX)					
5	CO-FO-	CLKX / FSX: Output	AXR(Outputs)/CLKX/FSX	Default (No Virtual Mode)	See 図 7-47
			AXR(Inputs)/CLKX/FSX	Default (No Virtual Mode)	
6	CI-FO-	FSX: Output CLKX: Input	AXR(Outputs)/CLKX/FSX	MCASP2_VIRTUAL3_SYNC_RX	See 図 7-48
			AXR(Inputs)/CLKX/FSX	MCASP2_VIRTUAL3_SYNC_RX	
7	CI-FI-	CLKX / FSX: Input	AXR(Outputs)/CLKX/FSX	MCASP2_VIRTUAL3_SYNC_RX(1)	See 図 7-49
			AXR(Inputs)/CLKX/FSX	MCASP2_VIRTUAL3_SYNC_RX(1)	
			AXR(Inputs)/CLKX/FSX	MCASP2_VIRTUAL1_SYNC_RX_80M(2)	
8	CO-FI-	CLKX: Output FSX: Input	AXR(Outputs)/CLKX/FSX	Default (No Virtual Mode)	See 図 7-50
			AXR(Inputs)/CLKX/FSX	Default (No Virtual Mode)	

(1) Used up to 50MHz. Should also be used in a CI-FI- mixed case where AXR operate as both inputs and outputs (that is, AXR are bidirectional).

(2) Used in 80MHz input only mode when AXR, CLKX and FSX are all inputs.

表 7-57. Virtual Mode Case Details for McASP3

No.	CASE	CASE Description	Virtual Mode Settings		Notes
			Signals	Virtual Mode Value	
IP Mode : ASYNC					
1	COIFOI	CLKX / FSX: Output CLKR / FSR: Input	AXR(Outputs)/CLKX/FSX	Default (No Virtual Mode)	See 図 7-43
			AXR(Inputs)/CLKR/FSR	MCASP3_VIRTUAL2_SYNC_RX	
2	COIFIO	CLKX / FSR: Output CLKR / FSX: Input	AXR(Outputs)/CLKX/FSX	Default (No Virtual Mode)	See 図 7-44
			AXR(Inputs)/CLKR/FSR	MCASP3_VIRTUAL2_SYNC_RX	
3	CIOFIO	CLKR / FSR: Output CLKX / FSX: Input	AXR(Outputs)/CLKX/FSX	MCASP3_VIRTUAL2_SYNC_RX	See 図 7-45
			AXR(Inputs)/CLKR/FSR	MCASP3_VIRTUAL2_SYNC_RX	
4	CIOFOI	CLKR / FSX: Output CLKX / FSR: Input	AXR(Outputs)/CLKX/FSX	MCASP3_VIRTUAL2_SYNC_RX	See 図 7-46
			AXR(Inputs)/CLKR/FSR	MCASP3_VIRTUAL2_SYNC_RX	
IP Mode : SYNC (CLKR / FSR internally generated from CLKX / FSX)					
5	CO-FO-	CLKX / FSX: Output	AXR(Outputs)/CLKX/FSX	Default (No Virtual Mode)	See 図 7-47
			AXR(Inputs)/CLKX/FSX	Default (No Virtual Mode)	
6	CI-FO-	FSX: Output CLKX: Input	AXR(Outputs)/CLKX/FSX	MCASP3_VIRTUAL2_SYNC_RX	See 図 7-48
			AXR(Inputs)/CLKX/FSX	MCASP3_VIRTUAL2_SYNC_RX	
7	CI-FI-	CLKX / FSX: Input	AXR(Outputs)/CLKX/FSX	MCASP3_VIRTUAL2_SYNC_RX	See 図 7-49
			AXR(Inputs)/CLKX/FSX	MCASP3_VIRTUAL2_SYNC_RX	
8	CO-FI-	CLKX: Output FSX: Input	AXR(Outputs)/CLKX/FSX	Default (No Virtual Mode)	See 図 7-50
			AXR(Inputs)/CLKX/FSX	Default (No Virtual Mode)	

表 7-58. Virtual Mode Case Details for McASP4

No.	CASE	CASE Description	Virtual Mode Settings		Notes
			Signals	Virtual Mode Value	
IP Mode : ASYNC					
1	COIFOI	CLKX / FSX: Output CLKR / FSR: Input	AXR(Outputs)/CLKX/FSX	Default (No Virtual Mode)	See 図 7-43
			AXR(Inputs)/CLKR/FSR	MCASP4_VIRTUAL1_SYNC_RX	
2	COIFIO	CLKX / FSR: Output CLKR / FSX: Input	AXR(Outputs)/CLKX/FSX	Default (No Virtual Mode)	See 図 7-44
			AXR(Inputs)/CLKR/FSR	MCASP4_VIRTUAL1_SYNC_RX	
3	CIOFIO	CLKR / FSR: Output CLKX / FSX: Input	AXR(Outputs)/CLKX/FSX	MCASP4_VIRTUAL1_SYNC_RX	See 図 7-45
			AXR(Inputs)/CLKR/FSR	MCASP4_VIRTUAL1_SYNC_RX	
4	CIOFOI	CLKR / FSX: Output CLKX / FSR: Input	AXR(Outputs)/CLKX/FSX	MCASP4_VIRTUAL1_SYNC_RX	See 図 7-46
			AXR(Inputs)/CLKR/FSR	MCASP4_VIRTUAL1_SYNC_RX	
IP Mode : SYNC (CLKR / FSR internally generated from CLKX / FSX)					
5	CO-FO-	CLKX / FSX: Output	AXR(Outputs)/CLKX/FSX	Default (No Virtual Mode)	See 図 7-47
			AXR(Inputs)/CLKX/FSX	Default (No Virtual Mode)	
6	CI-FO-	FSX: Output CLKX: Input	AXR(Outputs)/CLKX/FSX	MCASP4_VIRTUAL1_SYNC_RX	See 図 7-48
			AXR(Inputs)/CLKX/FSX	MCASP4_VIRTUAL1_SYNC_RX	
7	CI-FI-	CLKX / FSX: Input	AXR(Outputs)/CLKX/FSX	MCASP4_VIRTUAL1_SYNC_RX	See 図 7-49
			AXR(Inputs)/CLKX/FSX	MCASP4_VIRTUAL1_SYNC_RX	
8	CO-FI-	CLKX: Output FSX: Input	AXR(Outputs)/CLKX/FSX	Default (No Virtual Mode)	See 図 7-50
			AXR(Inputs)/CLKX/FSX	Default (No Virtual Mode)	

Copyright © 2015–2019, Texas Instruments Incorporated

表 7-59. Virtual Mode Case Details for McASP5

No.	CASE	CASE Description	Virtual Mode Settings		Notes
			Signals	Virtual Mode Value	
IP Mode : ASYNC					
1	COIFOI	CLKX / FSX: Output CLKR / FSR: Input	AXR(Outputs)/CLKX/FSX	Default (No Virtual Mode)	See 図 7-43
			AXR(Inputs)/CLKR/FSR	MCASP5_VIRTUAL1_SYNC_RX	
2	COIFIO	CLKX / FSR: Output CLKR / FSX: Input	AXR(Outputs)/CLKX/FSX	Default (No Virtual Mode)	See 図 7-44
			AXR(Inputs)/CLKR/FSR	MCASP5_VIRTUAL1_SYNC_RX	
3	CIOFIO	CLKR / FSR: Output CLKX / FSX: Input	AXR(Outputs)/CLKX/FSX	MCASP5_VIRTUAL1_SYNC_RX	See 図 7-45
			AXR(Inputs)/CLKR/FSR	MCASP5_VIRTUAL1_SYNC_RX	
4	CIOFOI	CLKR / FSX: Output CLKX / FSR: Input	AXR(Outputs)/CLKX/FSX	MCASP5_VIRTUAL1_SYNC_RX	See 図 7-46
			AXR(Inputs)/CLKR/FSR	MCASP5_VIRTUAL1_SYNC_RX	
IP Mode : SYNC (CLKR / FSR internally generated from CLKX / FSX)					
5	CO-FO-	CLKX / FSX: Output	AXR(Outputs)/CLKX/FSX	Default (No Virtual Mode)	See 図 7-47
			AXR(Inputs)/CLKX/FSX	Default (No Virtual Mode)	
6	CI-FO-	FSX: Output CLKX: Input	AXR(Outputs)/CLKX/FSX	MCASP5_VIRTUAL1_SYNC_RX	See 図 7-48
			AXR(Inputs)/CLKX/FSX	MCASP5_VIRTUAL1_SYNC_RX	
7	CI-FI-	CLKX / FSX: Input	AXR(Outputs)/CLKX/FSX	MCASP5_VIRTUAL1_SYNC_RX	See 図 7-49
			AXR(Inputs)/CLKX/FSX	MCASP5_VIRTUAL1_SYNC_RX	
8	CO-FI-	CLKX: Output FSX: Input	AXR(Outputs)/CLKX/FSX	Default (No Virtual Mode)	See 図 7-50
			AXR(Inputs)/CLKX/FSX	Default (No Virtual Mode)	

表 7-60. Virtual Mode Case Details for McASP6

No.	CASE	CASE Description	Virtual Mode Settings		Notes
			Signals	Virtual Mode Value	
IP Mode : ASYNC					
1	COIFOI	CLKX / FSX: Output CLKR / FSR: Input	AXR(Outputs)/CLKX/FSX	Default (No Virtual Mode)	See 図 7-43
			AXR(Inputs)/CLKR/FSR	MCASP6_VIRTUAL1_SYNC_RX	
2	COIFIO	CLKX / FSR: Output CLKR / FSX: Input	AXR(Outputs)/CLKX/FSX	Default (No Virtual Mode)	See 図 7-44
			AXR(Inputs)/CLKR/FSR	MCASP6_VIRTUAL1_SYNC_RX	
3	CIOFIO	CLKR / FSR: Output CLKX / FSX: Input	AXR(Outputs)/CLKX/FSX	MCASP6_VIRTUAL1_SYNC_RX	See 図 7-45
			AXR(Inputs)/CLKR/FSR	MCASP6_VIRTUAL1_SYNC_RX	
4	CIOFOI	CLKR / FSX: Output CLKX / FSR: Input	AXR(Outputs)/CLKX/FSX	MCASP6_VIRTUAL1_SYNC_RX	See 図 7-46
			AXR(Inputs)/CLKR/FSR	MCASP6_VIRTUAL1_SYNC_RX	
IP Mode : SYNC (CLKR / FSR internally generated from CLKX / FSX)					
5	CO-FO-	CLKX / FSX: Output	AXR(Outputs)/CLKX/FSX	Default (No Virtual Mode)	See 図 7-47
			AXR(Inputs)/CLKX/FSX	Default (No Virtual Mode)	
6	CI-FO-	FSX: Output CLKX: Input	AXR(Outputs)/CLKX/FSX	MCASP6_VIRTUAL1_SYNC_RX	See 図 7-48
			AXR(Inputs)/CLKX/FSX	MCASP6_VIRTUAL1_SYNC_RX	
7	CI-FI-	CLKX / FSX: Input	AXR(Outputs)/CLKX/FSX	MCASP6_VIRTUAL1_SYNC_RX	See 図 7-49
			AXR(Inputs)/CLKX/FSX	MCASP6_VIRTUAL1_SYNC_RX	
8	CO-FI-	CLKX: Output FSX: Input	AXR(Outputs)/CLKX/FSX	Default (No Virtual Mode)	See 図 7-50
			AXR(Inputs)/CLKX/FSX	Default (No Virtual Mode)	

表 7-61. Virtual Mode Case Details for McASP7

No.	CASE	CASE Description	Virtual Mode Settings		Notes
			Signals	Virtual Mode Value	
IP Mode : ASYNC					
1	COIFOI	CLKX / FSX: Output CLKR / FSR: Input	AXR(Outputs)/CLKX/FSX	Default (No Virtual Mode)	See 図 7-43
			AXR(Inputs)/CLKR/FSR	MCASP7_VIRTUAL2_SYNC_RX	
2	COIFIO	CLKX / FSR: Output CLKR / FSX: Input	AXR(Outputs)/CLKX/FSX	Default (No Virtual Mode)	See 図 7-44
			AXR(Inputs)/CLKR/FSR	MCASP7_VIRTUAL2_SYNC_RX	
3	CIOFIO	CLKR / FSR: Output CLKX / FSX: Input	AXR(Outputs)/CLKX/FSX	MCASP7_VIRTUAL2_SYNC_RX	See 図 7-45
			AXR(Inputs)/CLKR/FSR	MCASP7_VIRTUAL2_SYNC_RX	
4	CIOFOI	CLKR / FSX: Output CLKX / FSR: Input	AXR(Outputs)/CLKX/FSX	MCASP7_VIRTUAL2_SYNC_RX	See 図 7-46
			AXR(Inputs)/CLKR/FSR	MCASP7_VIRTUAL2_SYNC_RX	
IP Mode : SYNC (CLKR / FSR internally generated from CLKX / FSX)					
5	CO-FO-	CLKX / FSX: Output	AXR(Outputs)/CLKX/FSX	Default (No Virtual Mode)	See 図 7-47
			AXR(Inputs)/CLKX/FSX	Default (No Virtual Mode)	
6	CI-FO-	FSX: Output CLKX: Input	AXR(Outputs)/CLKX/FSX	MCASP7_VIRTUAL2_SYNC_RX	See 図 7-48
			AXR(Inputs)/CLKX/FSX	MCASP7_VIRTUAL2_SYNC_RX	
7	CI-FI-	CLKX / FSX: Input	AXR(Outputs)/CLKX/FSX	MCASP7_VIRTUAL2_SYNC_RX	See 図 7-49
			AXR(Inputs)/CLKX/FSX	MCASP7_VIRTUAL2_SYNC_RX	
8	CO-FI-	CLKX: Output FSX: Input	AXR(Outputs)/CLKX/FSX	Default (No Virtual Mode)	See 図 7-50
			AXR(Inputs)/CLKX/FSX	Default (No Virtual Mode)	

表 7-62. Virtual Mode Case Details for McASP8

No.	CASE	CASE Description	Virtual Mode Settings		Notes
			Signals	Virtual Mode Value	
IP Mode : ASYNC					
1	COIFOI	CLKX / FSX: Output CLKR / FSR: Input	AXR(Outputs)/CLKX/FSX	Default (No Virtual Mode)	See 図 7-43
			AXR(Inputs)/CLKR/FSR	MCASP8_VIRTUAL1_SYNC_RX	
2	COIFIO	CLKX / FSR: Output CLKR / FSX: Input	AXR(Outputs)/CLKX/FSX	Default (No Virtual Mode)	See 図 7-44
			AXR(Inputs)/CLKR/FSR	MCASP8_VIRTUAL1_SYNC_RX	
3	CIOFIO	CLKR / FSR: Output CLKX / FSX: Input	AXR(Outputs)/CLKX/FSX	MCASP8_VIRTUAL1_SYNC_RX	See 図 7-45
			AXR(Inputs)/CLKR/FSR	MCASP8_VIRTUAL1_SYNC_RX	
4	CIOFOI	CLKR / FSX: Output CLKX / FSR: Input	AXR(Outputs)/CLKX/FSX	MCASP8_VIRTUAL1_SYNC_RX	See 図 7-46
			AXR(Inputs)/CLKR/FSR	MCASP8_VIRTUAL1_SYNC_RX	
IP Mode : SYNC (CLKR / FSR internally generated from CLKX / FSX)					
5	CO-FO-	CLKX / FSX: Output	AXR(Outputs)/CLKX/FSX	Default (No Virtual Mode)	See 図 7-47
			AXR(Inputs)/CLKX/FSX	Default (No Virtual Mode)	
6	CI-FO-	FSX: Output CLKX: Input	AXR(Outputs)/CLKX/FSX	MCASP8_VIRTUAL1_SYNC_RX	See 図 7-48
			AXR(Inputs)/CLKX/FSX	MCASP8_VIRTUAL1_SYNC_RX	
7	CI-FI-	CLKX / FSX: Input	AXR(Outputs)/CLKX/FSX	MCASP8_VIRTUAL1_SYNC_RX	See 図 7-49
			AXR(Inputs)/CLKX/FSX	MCASP8_VIRTUAL1_SYNC_RX	
8	CO-FI-	CLKX: Output FSX: Input	AXR(Outputs)/CLKX/FSX	Default (No Virtual Mode)	See 図 7-50
			AXR(Inputs)/CLKX/FSX	Default (No Virtual Mode)	

Copyright © 2015–2019, Texas Instruments Incorporated

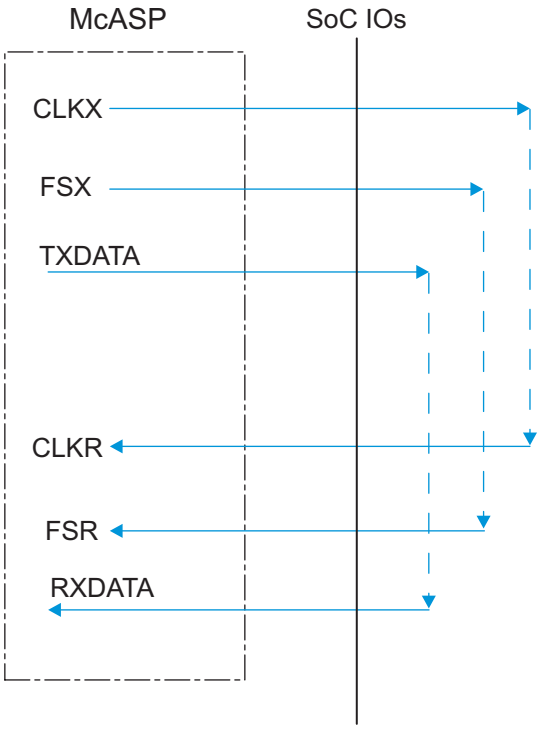

図 7-43. McASP1-8 COIFOI – ASYNC Mode

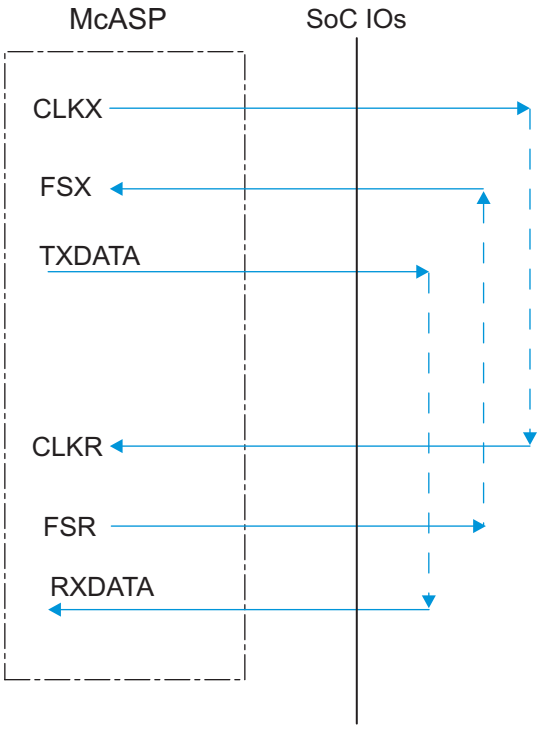

図 7-44. McASP1-8 COIFIO – ASYNC Mode

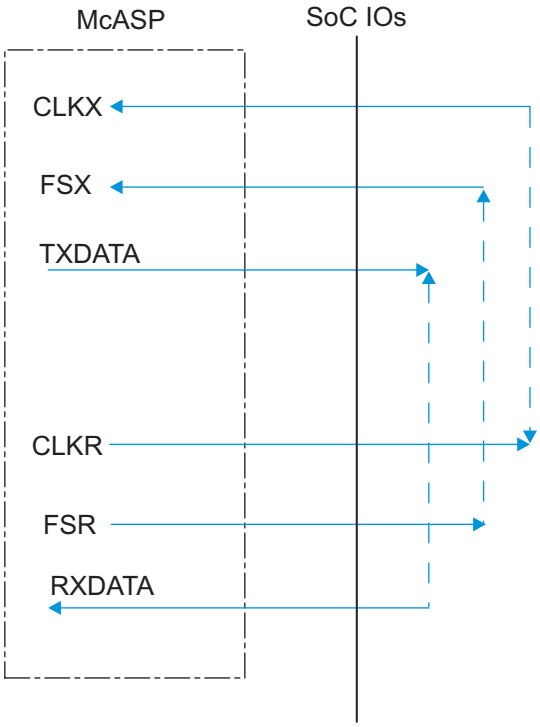

図 7-45. McASP1-8 CIOFIO – ASYNC Mode

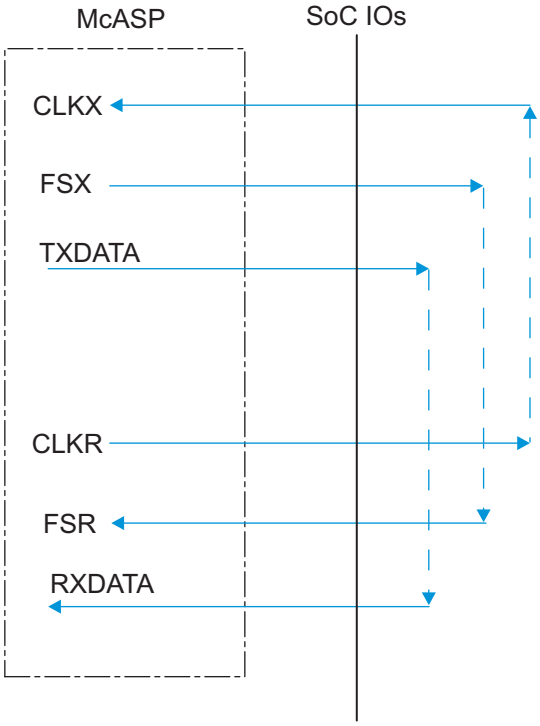

図 7-46. McASP1-8 CIOFOI – ASYNC Mode

Copyright © 2015–2019, Texas Instruments Incorporated

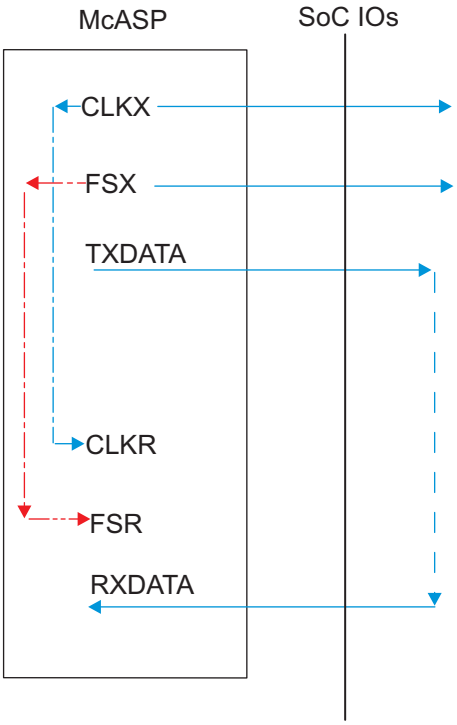

図 7-47. McASP1-8 CO-FO- – SYNC Mode

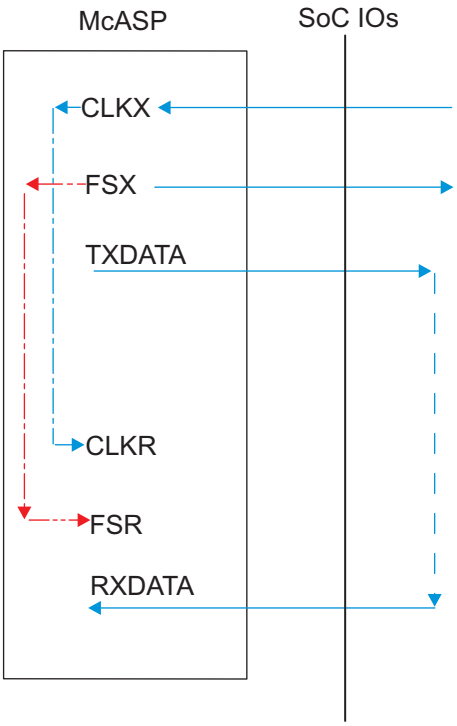

図 7-48. McASP1-8 CI-FO- – SYNC Mode

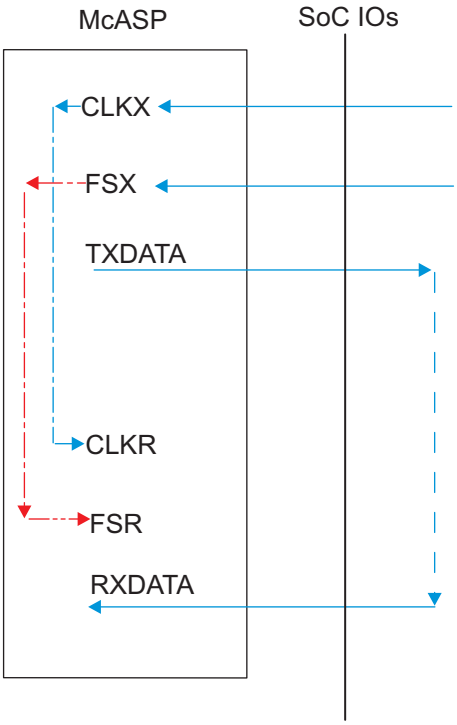

図 7-49. McASP1-8 CI-FI- – SYNC Mode

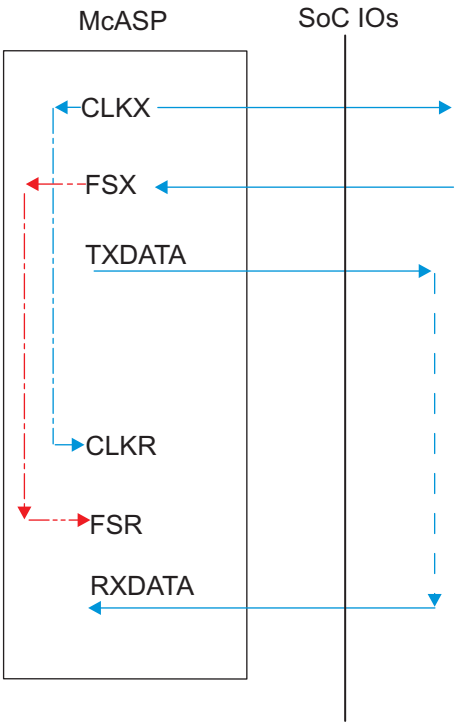

図 7-50. McASP1-8 CO-FI- – SYNC Mode

Virtual IO Timings Modes must be used to ensure some IO timings for McASP1. See 表 7-2 *Modes Summary* for a list of IO timings requiring the use of Virtual IO Timings Modes. See 表 7-63 *Virtual Functions Mapping for McASP1* for a definition of the Virtual modes.

表 7-63 presents the values for DELAYMODE bitfield.

Copyright © 2015–2019, Texas Instruments Incorporated

表 7-63. Virtual Functions Mapping for McASP1

BALL	BALL NAME	Delay Mode Value			MUXMODE[15:0]		
		MCASP1_VIRTUAL1_ASYNC_TX	MCASP1_VIRTUAL2_SYNC_RX	MCASP1_VIRTUAL3_ASYNC_RX	0	1	2
E21	gpio6_14	11	15	14		mcasp1_axr8	
F20	gpio6_15	11	15	14		mcasp1_axr9	
F21	gpio6_16	11	15	14		mcasp1_axr10	
D18	xref_clk0	0	15	14			mcasp1_axr4
E17	xref_clk1	0	15	14			mcasp1_axr5
B26	xref_clk2	5	15	14			mcasp1_axr6
C23	xref_clk3	5	15	14			mcasp1_axr7
C14	mcasp1_aclkx	8	15	14	mcasp1_aclkx		
D14	mcasp1_fsx	12	15	14	mcasp1_fsx		
B14	mcasp1_aclkr	11	N/A	15	mcasp1_aclkr		
J14	mcasp1_fsr	11	N/A	15	mcasp1_fsr		
G12	mcasp1_axr0	8	15	14	mcasp1_axr0		
F12	mcasp1_axr1	8	15	14	mcasp1_axr1		
G13	mcasp1_axr2	10	15	14	mcasp1_axr2		
J11	mcasp1_axr3	10	15	14	mcasp1_axr3		
E12	mcasp1_axr4	10	15	14	mcasp1_axr4		
F13	mcasp1_axr5	10	15	14	mcasp1_axr5		
C12	mcasp1_axr6	10	15	14	mcasp1_axr6		
D12	mcasp1_axr7	10	15	14	mcasp1_axr7		
B12	mcasp1_axr8	6	15	14	mcasp1_axr8		
A11	mcasp1_axr9	6	15	14	mcasp1_axr9		
B13	mcasp1_axr10	6	15	14	mcasp1_axr10		
A12	mcasp1_axr11	6	15	14	mcasp1_axr11		
E14	mcasp1_axr12	6	15	14	mcasp1_axr12		
A13	mcasp1_axr13	6	15	14	mcasp1_axr13		
G14	mcasp1_axr14	6	15	14	mcasp1_axr14		
F14	mcasp1_axr15	6	15	14	mcasp1_axr15		

1. NA in this table stands for Not Applicable.

Virtual IO Timings Modes must be used to ensure some IO timings for McASP2. See 表 7-2 *Modes Summary* for a list of IO timings requiring the use of Virtual IO Timings Modes. See 表 7-64 *Virtual Functions Mapping for McASP2* for a definition of the Virtual modes.

表 7-64 presents the values for DELAYMODE bitfield.

表 7-64. Virtual Functions Mapping for McASP2

BALL	BALL NAME	Delay Mode Value					MUXMODE[15:0]		
		MCASP2_VIRTUAL1_ASYNC_RX_80M	MCASP2_VIRTUAL2_ASYNC_RX	MCASP2_VIRTUAL3_ASYNC_TX	MCASP2_VIRTUAL4_SYNC_RX	MCASP2_VIRTUAL5_SYNC_RX_80M	0	1	2
D18	xref_clk0	10	9	4	8	6		mcasp2_axr8	
E17	xref_clk1	10	9	4	8	6		mcasp2_axr9	
B26	xref_clk2	13	12	0	11	10		mcasp2_axr10	
C23	xref_clk3	13	12	0	11	10		mcasp2_axr11	
A19	mcasp2_aclkx	15	14	5	10	9	mcasp2_aclkx		
A18	mcasp2_fsx	15	14	5	10	9	mcasp2_fsx		
E15	mcasp2_aclkr	15	14	10	N/A	N/A	mcasp2_aclkr		
A20	mcasp2_fsr	15	14	10	N/A	N/A	mcasp2_fsr		
B15	mcasp2_axr0	15	14	9	13	12	mcasp2_axr0		
A15	mcasp2_axr1	15	14	9	13	12	mcasp2_axr1		
C15	mcasp2_axr2	15	14	4	10	9	mcasp2_axr2		
A16	mcasp2_axr3	15	14	4	10	9	mcasp2_axr3		
D15	mcasp2_axr4	15	14	7	13	12	mcasp2_axr4		
B16	mcasp2_axr5	15	14	7	13	12	mcasp2_axr5		
B17	mcasp2_axr6	15	14	7	13	12	mcasp2_axr6		
A17	mcasp2_axr7	15	14	7	13	12	mcasp2_axr7		
B18	mcasp3_aclkx	15	14	5	10	9			mcasp2_axr12
F15	mcasp3_fsx	15	14	4	10	9			mcasp2_axr13
B19	mcasp3_axr0	15	14	4	10	9			mcasp2_axr14
C17	mcasp3_axr1	15	14	3	10	8			mcasp2_axr15

1. NA in this table stands for Not Applicable.

Virtual IO Timings Modes must be used to ensure some IO timings for McASP3/4/5/6/7/8. See 表 7-2 *Modes Summary* for a list of IO timings requiring the use of Virtual IO Timings Modes. See 表 7-65 *Virtual Functions Mapping for McASP3/4/5/6/7/8* for a definition of the Virtual modes.

表 7-65 presents the values for DELAYMODE bitfield.

表 7-65. Virtual Functions Mapping for McASP3/4/5/6/7/8

BALL NUMBER	BALL NAME	Delay Mode Value	MUXMODE[15:0]		
			0	1	2
MCASP3_VIRTUAL2_SYNC_RX					

Copyright © 2015–2019, Texas Instruments Incorporated

表 7-65. Virtual Functions Mapping for McASP3/4/5/6/7/8 (continued)

BALL NUMBER	BALL NAME	Delay Mode Value	MUXMODE[15:0]		
			0	1	2
C15	mcasp2_axr2	8		mcasp3_axr2	
A16	mcasp2_axr3	8		mcasp3_axr3	
B18	mcasp3_aclkx	8	mcasp3_aclkx	mcasp3_aclkr	
F15	mcasp3_fsx	8	mcasp3_fsx	mcasp3_fsr	
B19	mcasp3_axr0	8	mcasp3_axr0		
C17	mcasp3_axr1	6	mcasp3_axr1		
MCASP4_VIRTUAL1_SYNC_RX					
E12	mcasp1_axr4	13		mcasp4_axr2	
F13	mcasp1_axr5	13		mcasp4_axr3	
C18	mcasp4_aclkx	15	mcasp4_aclkx	mcasp4_aclkr	
A21	mcasp4_fsx	15	mcasp4_fsx	mcasp4_fsr	
G16	mcasp4_axr0	15	mcasp4_axr0		
D17	mcasp4_axr1	15	mcasp4_axr1		
MCASP5_VIRTUAL1_SYNC_RX					
C12	mcasp1_axr6	13		mcasp5_axr2	
D12	mcasp1_axr7	13		mcasp5_axr3	
AA3	mcasp5_aclkx	15	mcasp5_aclkx	mcasp5_aclkr	
AB9	mcasp5_fsx	15	mcasp5_fsx	mcasp5_fsr	
AB3	mcasp5_axr0	15	mcasp5_axr0		
AA4	mcasp5_axr1	15	mcasp5_axr1		
MCASP6_VIRTUAL1_SYNC_RX					
G13	mcasp1_axr2	13		mcasp6_axr2	
J11	mcasp1_axr3	13		mcasp6_axr3	
B12	mcasp1_axr8	10		mcasp6_axr0	
A11	mcasp1_axr9	10		mcasp6_axr1	
B13	mcasp1_axr10	10		mcasp6_aclkx	mcasp6_aclkr
A12	mcasp1_axr11	10		mcasp6_fsx	mcasp6_fsr
MCASP7_VIRTUAL2_SYNC_RX					
B14	mcasp1_aclkr	14		mcasp7_axr2	
J14	mcasp1_fsr	14		mcasp7_axr3	
E14	mcasp1_axr12	10		mcasp7_axr0	
A13	mcasp1_axr13	10		mcasp7_axr1	

Copyright © 2015–2019, Texas Instruments Incorporated

表 7-65. Virtual Functions Mapping for McASP3/4/5/6/7/8 (continued)

BALL NUMBER	BALL NAME	Delay Mode Value	MUXMODE[15:0]		
			0	1	2
G14	mcasp1_axr14	10		mcasp7_aclkx	mcasp7_aclkr
F14	mcasp1_axr15	10		mcasp7_fsx	mcasp7_fsr
MCASP8_VIRTUAL1_SYNC_RX					
E15	mcasp2_aclkr	13		mcasp8_axr2	
A20	mcasp2_fsr	13		mcasp8_axr3	
D15	mcasp2_axr4	11		mcasp8_axr0	
B16	mcasp2_axr5	11		mcasp8_axr1	
B17	mcasp2_axr6	11		mcasp8_aclkx	mcasp8_aclkr
A17	mcasp2_axr7	11		mcasp8_fsx	mcasp8_fsr

Copyright © 2015–2019, Texas Instruments Incorporated

7.18 Universal Serial Bus (USB)

SuperSpeed USB DRD Subsystem has two instances in the device providing the following functions:

- USB1: SuperSpeed (SS) USB 3.0 Dual-Role-Device (DRD) subsystem with integrated SS (USB3.0) PHY and HS/FS (USB2.0) PHY.
- USB2: High-Speed (HS) USB 2.0 Dual-Role-Device (DRD) subsystem with integrated HS/FS PHY.

注: For more information, see the SuperSpeed USB DRD section of the Device TRM.

7.18.1 USB1 DRD PHY

The USB1 DRD interface supports the following applications:

- USB2.0 High-Speed PHY port (1.8 V and 3.3 V): this asynchronous high-speed interface is compliant with the USB2.0 PHY standard with an internal transceiver (USB2.0 standard v2.0), for a maximum data rate of 480 Mbps.
- USB3.0 Super-Speed PHY port (1.8 V): this asynchronous differential super-speed interface is compliant with the USB3.0 RX/TX PHY standard (USB3.0 standard v1.0) for a maximum data bit rate of 5Gbps.

7.18.2 USB2 PHY

The USB2 interface supports the following applications:

- USB2.0 High-Speed PHY port (1.8 V and 3.3 V): this asynchronous high-speed interface is compliant with the USB2.0 PHY standard with an internal transceiver (USB2.0 standard v2.0), for a maximum data rate of 480 Mbps.

7.19 Serial Advanced Technology Attachment (SATA)

The SATA RX/TX PHY interface is compliant with the SATA standard v2.6 for a maximum data rate:

- Gen2i, Gen2m, Gen2x: 3Gbps.
- Gen1i, Gen1m, Gen1x: 1.5Gbps.

注: For more information, see the SATA Controller section of the Device TRM.

7.20 Peripheral Component Interconnect Express (PCIe)

The device supports connections to PCIe-compliant devices via the integrated PCIe master/slave bus interface. The PCIe module is comprised of a dual-mode PCIe core and a SerDes PHY. Each PCIe subsystem controller has support for PCIe Gen-II mode (5 Gbps per lane) and Gen-I mode (2.5 Gbps per lane) (Single Lane and Flexible dual lane configuration).

The device PCIe supports the following features:

- 16-bit operation @250 MHz on PIPE interface (per 16-bit lane)
- Supports 2 ports x 1 lane or 1 port x 2 lanes configuration
- Single virtual channel (VC0), single traffic class (TC0)
- Single function in end-point mode
- Automatic width and speed negotiation
- Max payload: 128 byte outbound, 256 byte inbound
- Automatic credit management
- ECRC generation and checking
- Configurable BAR filtering
- Legacy interrupt reception (RC) and generation (EP)

- MSI generation and reception
- PCI Express Active State Power Management (ASPM) state L0s and L1 (with exceptions)
- All PCI Device Power Management D-states with the exception of $D3_{cold}$ / L2 state

The PCIe controller on this device conforms to the PCI Express Base 3.0 Specification, revision 1.0 and the PCI Local Bus Specification, revision 3.0.

注: For more information, see the PCIe Controller section of the Device TRM.

7.21 Controller Area Network Interface (DCAN)

The device provides two DCAN interfaces for supporting distributed realtime control with a high level of security. The DCAN interfaces implement the following features:

- Supports CAN protocol version 2.0 part A, B
- Bit rates up to 1 MBit/s
- 64 message objects
- Individual identifier mask for each message object
- Programmable FIFO mode for message objects
- Programmable loop-back modes for self-test operation
- Suspend mode for debug support
- Software module reset
- Automatic bus on after Bus-Off state by a programmable 32-bit timer
- Direct access to Message RAM during test mode
- CAN Rx/Tx pins are configurable as general-purpose IO pins
- Two interrupt lines (plus additional parity-error interrupts line)
- RAM initialization
- DMA support

注: For more information, see the DCAN section of the Device TRM.

注: The Controller Area Network Interface x (x = 1 to 2) is also referred to as DCANx.

注: Refer to the CAN Specification for calculations necessary to validate timing compliance. Jitter tolerance calculations must be performed to validate the implementation.

表 7-66 and 表 7-67 present timing and switching characteristics for DCANx Interface.

表 7-66. Timing Requirements for DCANx Receive

NO.	PARAMETER	DESCRIPTION	MIN	MAX	UNIT
-	f(baud)	Maximum programmable baud rate		1	Mbps
-	$t_{d(DCANRX)}$	Delay time, DCANx_RX pin to receive shift register		15	ns

表 7-67. Switching Characteristics Over Recommended Operating Conditions for DCANx Transmit

NO.	PARAMETER	DESCRIPTION	MIN	MAX	UNIT
-	f(baud)	Maximum programmable baud rate		1	Mbps
-	$t_{d(DCANTX)}$	Delay time, Transmit shift register to DCANx_TX pin[(1)]		15	ns

Copyright © 2015–2019, Texas Instruments Incorporated

(1) These values do not include rise/fall times of the output buffer.

7.22 Ethernet Interface (GMAC_SW)

The three-port gigabit ethernet switch subsystem (GMAC_SW) provides ethernet packet communication and can be configured as an ethernet switch. It provides the Gigabit Media Independent Interface (G/MII) in MII mode, Reduced Gigabit Media Independent Interface (RGMII), Reduced Media Independent Interface (RMII), and the Management Data Input/Output (MDIO) for physical layer device (PHY) management.

注: For more information, see the Gigabit Ethernet Switch (GMAC_SW) section of the Device TRM.

注: The Gigabit, Reduced and Media Independent Interface n (n = 0 to 1) are also referred to as MIIn, RMIIn and RGMIIn.

注意

The IO timings provided in this section are only valid if signals within a single IOSET are used. The IOSETs are defined in the 表 7-72, 表 7-75, 表 7-80 and 表 7-87.

注意

The IO Timings provided in this section are only valid for some GMAC usage modes when the corresponding Virtual IO Timings or Manual IO Timings are configured as described in the tables found in this section.

表 7-68 and 図 7-51 present timing requirements for MIIn in receive operation.

7.22.1 GMAC MII Timings

表 7-68. Timing Requirements for miin_rxclk - MII Operation

NO.	PARAMETER	DESCRIPTION	SPEED	MIN	MAX	UNIT
1	$t_{c(RX_CLK)}$	Cycle time, miin_rxclk	10 Mbps	400		ns
			100 Mbps	40		ns
2	$t_{w(RX_CLKH)}$	Pulse duration, miin_rxclk high	10 Mbps	140	260	ns
			100 Mbps	14	26	ns
3	$t_{w(RX_CLKL)}$	Pulse duration, miin_rxclk low	10 Mbps	140	260	ns
			100 Mbps	14	26	ns
4	$t_{t(RX_CLK)}$	Transition time, miin_rxclk	10 Mbps		3	ns
			100 Mbps		3	ns

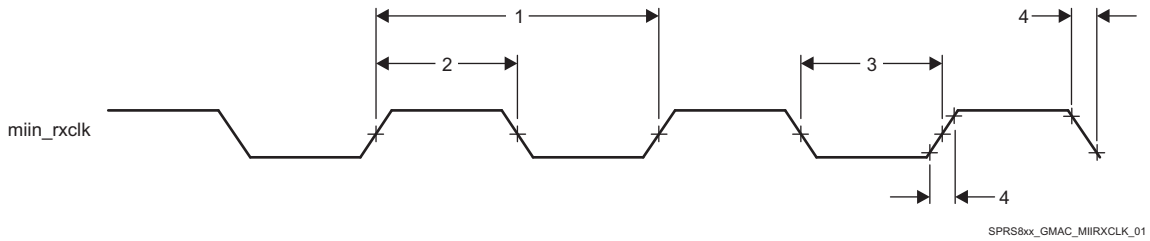

図 7-51. Clock Timing (GMAC Receive) - MIIn operation

表 7-69 and 図 7-52 present timing requirements for MIIn in transmit operation.

表 7-69. Timing Requirements for miin_txclk - MII Operation

NO.	PARAMETER	DESCRIPTION	SPEED	MIN	MAX	UNIT
1	$t_{c(TX_CLK)}$	Cycle time, miin_txclk	10 Mbps	400		ns
			100 Mbps	40		ns
2	$t_{w(TX_CLKH)}$	Pulse duration, miin_txclk high	10 Mbps	140	260	ns
			100 Mbps	14	26	ns
3	$t_{w(TX_CLKL)}$	Pulse duration, miin_txclk low	10 Mbps	140	260	ns
			100 Mbps	14	26	ns
4	$t_{t(TX_CLK)}$	Transition time, miin_txclk	10 Mbps		3	ns
			100 Mbps		3	ns

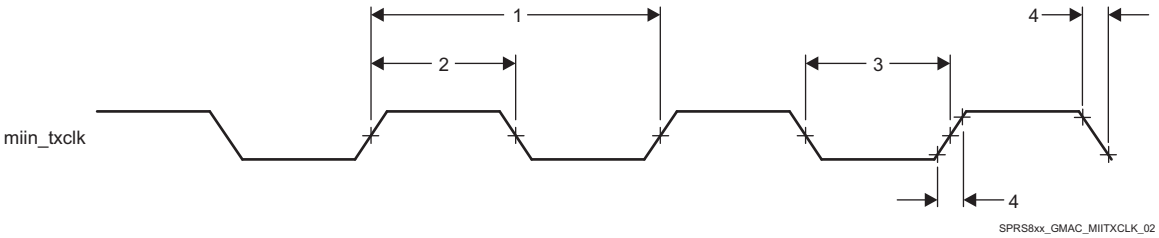

図 7-52. Clock Timing (GMAC Transmit) - MIIn operation

表 7-70 and 図 7-53 present timing requirements for GMAC MIIn Receive 10/100Mbit/s.

表 7-70. Timing Requirements for GMAC MIIn Receive 10/100 Mbit/s

NO.	PARAMETER	DESCRIPTION	MIN	MAX	UNIT
1	$t_{su(RXD\text{-}RX_CLK)}$	Setup time, receive selected signals valid before miin_rxclk	8		ns
	$t_{su(RX_DV\text{-}RX_CLK)}$				
	$t_{su(RX_ER\text{-}RX_CLK)}$				
2	$t_{h(RX_CLK\text{-}RXD)}$	Hold time, receive selected signals valid after miin_rxclk	8		ns
	$t_{h(RX_CLK\text{-}RX_DV)}$				
	$t_{h(RX_CLK\text{-}RX_ER)}$				

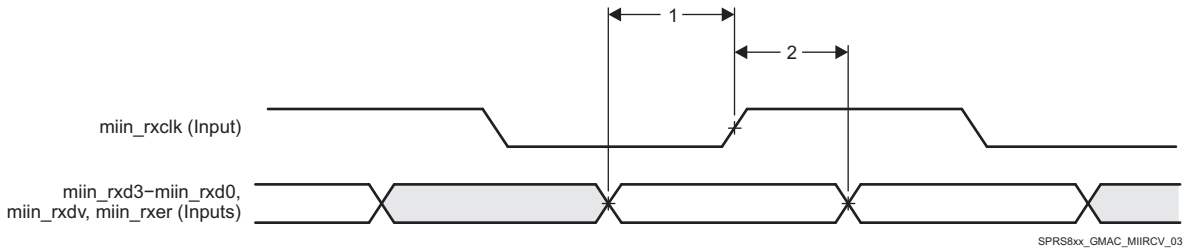

図 7-53. GMAC Receive Interface Timing MIIn operation

Copyright © 2015–2019, Texas Instruments Incorporated

表 7-71 and 図 7-54 present timing requirements for GMAC MIIn Transmit 10/100Mbit/s.

表 7-71. Switching Characteristics Over Recommended Operating Conditions for GMAC MIIn Transmit 10/100 Mbits/s

NO.	PARAMETER	DESCRIPTION	MIN	MAX	UNIT
1	$t_{d(TX_CLK-TXD)}$	Delay time, miin_txclk to transmit selected signals valid	0	25	ns
	$t_{d(TX_CLK-TX_EN)}$				
	$t_{d(TX_CLK-TX_ER)}$				

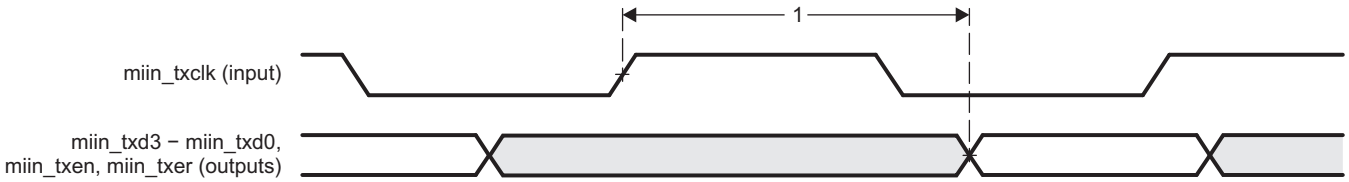

図 7-54. GMAC Transmit Interface Timing MIIn operation

In 表 7-72 are presented the specific groupings of signals (IOSET) for use with GMAC MII signals.

表 7-72. GMAC MII IOSETs

SIGNALS	IOSET5		IOSET6	
	BALL	MUX	BALL	MUX
GMAC MII1				
mii1_txd3	C5	8		
mii1_txd2	D6	8		
mii1_txd1	B2	8		
mii1_txd0	C4	8		
mii1_rxd3	F5	8		
mii1_rxd2	E4	8		
mii1_rxd1	C1	8		
mii1_rxd0	E6	8		
mii1_col	B4	8		
mii1_rxer	B3	8		
mii1_txer	A3	8		
mii1_txen	A4	8		
mii1_crs	B5	8		
mii1_rxclk	D5	8		
mii1_txclk	C3	8		
mii1_rxdv	C2	8		
GMAC MII0				
mii0_txd3			V5	3
mii0_txd2			V4	3
mii0_txd1			Y2	3
mii0_txd0			W2	3
mii0_rxd3			W9	3
mii0_rxd2			V9	3
mii0_rxd1			V6	3
mii0_rxd0			U6	3
mii0_txclk			U5	3
mii0_txer			U4	3

表 7-72. GMAC MII IOSETs (continued)

SIGNALS	IOSET5		IOSET6	
	BALL	MUX	BALL	MUX
mii0_rxer			U7	3
mii0_rxdv			V2	3
mii0_crs			V7	3
mii0_col			V1	3
mii0_rxclk			Y1	3
mii0_txen			V3	3

7.22.2 GMAC MDIO Interface Timings

> 注意
>
> The IO Timings provided in this section are only valid for some GMAC usage modes when the corresponding Virtual IO Timings or Manual IO Timings are configured as described in the tables found in this section.

表 7-73, 表 7-73 and 図 7-55 present timing requirements for MDIO.

表 7-73. Timing Requirements for MDIO Input

No	PARAMETER	DESCRIPTION	MIN	MAX	UNIT
MDIO1	$t_{c(MDC)}$	Cycle time, MDC	400		ns
MDIO2	$t_{w(MDCH)}$	Pulse Duration, MDC High	160		ns
MDIO3	$t_{w(MDCL)}$	Pulse Duration, MDC Low	160		ns
MDIO4	$t_{su(MDIO-MDC)}$	Setup time, MDIO valid before MDC High	90		ns
MDIO5	$t_{h(MDIO_MDC)}$	Hold time, MDIO valid from MDC High	0		ns

表 7-74. Switching Characteristics Over Recommended Operating Conditions for MDIO Output

NO	PARAMETER	DESCRIPTION	MIN	MAX	UNIT
MDIO6	$t_{t(MDC)}$	Transition time, MDC		5	ns
MDIO7	$t_{d(MDC-MDIO)}$	Delay time, MDC low to MDIO valid	-150	150	ns

Copyright © 2015–2019, Texas Instruments Incorporated

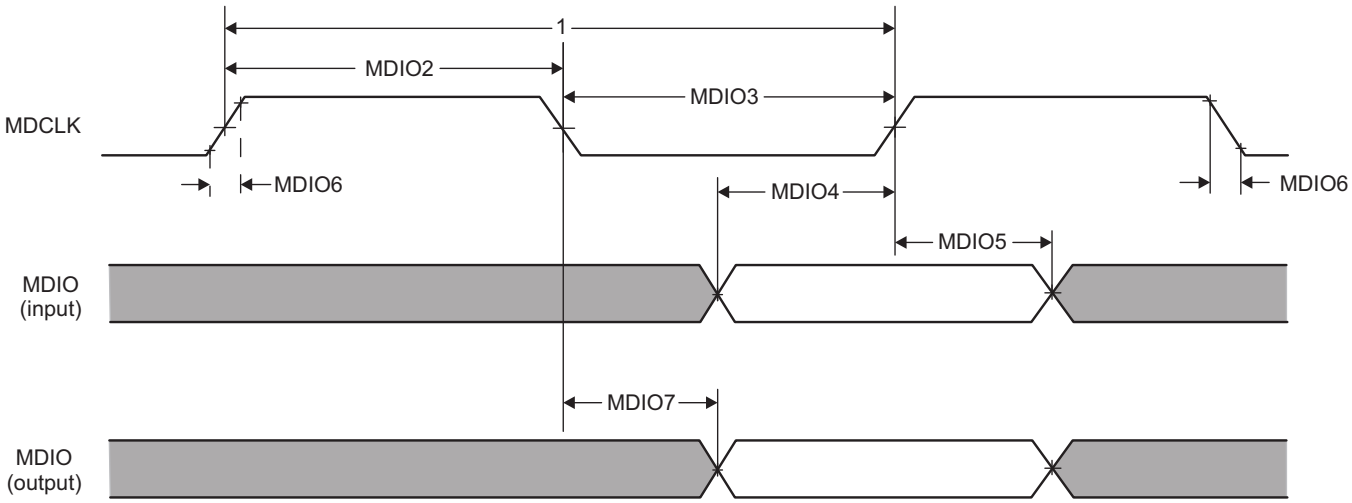

図 7-55. GMAC MDIO diagrams

In 表 7-75 are presented the specific groupings of signals (IOSET) for use with GMAC MDIO signals.

表 7-75. GMAC MDIO IOSETs

SIGNALS	IOSET7		IOSET8		IOSET9		IOSET10	
	BALL	MUX	BALL	MUX	BALL	MUX	BALL	MUX
mdio_d	F6	3	U4	0	AB4	1	B20	5
mdio_mclk	D3	3	V1	0	AC5	1	B21	5

7.22.3 GMAC RMII Timings

The main reference clock REF_CLK (RMII_50MHZ_CLK) of RMII interface is internally supplied from PRCM. The source of this clock could be either externally sourced from the RMII_MHZ_50_CLK pin of the device or internally generated from DPLL_GMAC output clock GMAC_RMII_HS_CLK. See the PRCM chapter of the device TRM for full details about RMII reference clock.

> 注意
>
> The IO Timings provided in this section are only valid for some GMAC usage modes when the corresponding Virtual IO Timings or Manual IO Timings are configured as described in the tables found in this section.

表 7-76, 表 7-77 and 図 7-56 present timing requirements for GMAC RMIIn Receive.

表 7-76. Timing Requirements for GMAC REF_CLK - RMII Operation

NO.	PARAMETER	DESCRIPTION	MIN	MAX	UNIT
RMII1	$t_{c(REF_CLK)}$	Cycle time, REF_CLK	20		ns
RMII2	$t_{w(REF_CLKH)}$	Pulse duration, REF_CLK high	7	13	ns
RMII3	$t_{w(REF_CLKL)}$	Pulse duration, REF_CLK low	7	13	ns
RMII4	$t_{tt(REF_CLK)}$	Transistion time, REF_CLK		3	ns

表 7-77. Timing Requirements for GMAC RMIIn Receive

NO.	PARAMETER	DESCRIPTION	MIN	MAX	UNIT
RMII5	$t_{su(RXD-REF_CLK)}$	Setup time, receive selected signals valid before REF_CLK	4		ns
	$t_{su(CRS_DV-REF_CLK)}$				
	$t_{su(RX_ER-REF_CLK)}$				
RMII6	$t_{h(REF_CLK-RXD)}$	Hold time, receive selected signals valid after REF_CLK	2		ns
	$t_{h(REF_CLK-CRS_DV)}$				
	$t_{h(REF_CLK-RX_ER)}$				

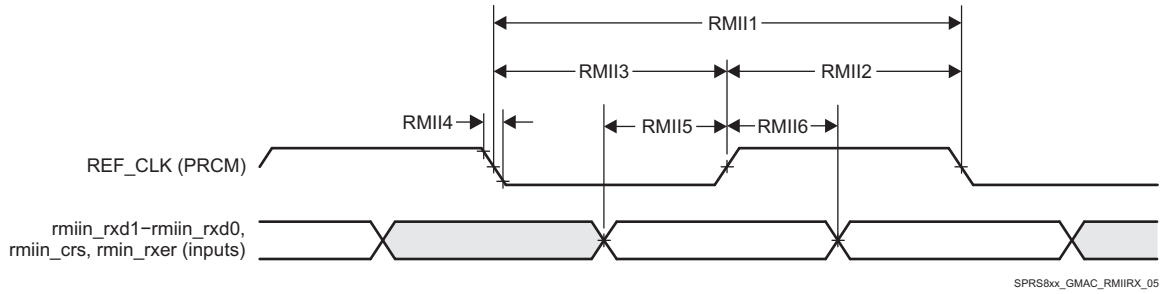

図 7-56. GMAC Receive Interface Timing RMIIn operation

表 7-78, 表 7-78 and 図 7-57 present switching characteristics for GMAC RMIIn Transmit 10/100Mbit/s.

表 7-78. Switching Characteristics Over Recommended Operating Conditions for GMAC REF_CLK - RMII Operation

NO.	PARAMETER	DESCRIPTION	MIN	MAX	UNIT
RMII7	$t_{c(REF_CLK)}$	Cycle time, REF_CLK	20		ns
RMII8	$t_{w(REF_CLKH)}$	Pulse duration, REF_CLK high	7	13	ns
RMII9	$t_{w(REF_CLKL)}$	Pulse duration, REF_CLK low	7	13	ns
RMII10	$t_{t(REF_CLK)}$	Transistion time, REF_CLK		3	ns

表 7-79. Switching Characteristics Over Recommended Operating Conditions for GMAC RMIIn Transmit 10/100 Mbits/s

NO.	PARAMETER	DESCRIPTION	RMIIn	MIN	MAX	UNIT
RMII11	$t_{d(REF_CLK-TXD)}$	Delay time, REF_CLK high to selected transmit signals valid	RMII0	2	13.5	ns
	$t_{dd(REF_CLK-TXEN)}$					
	$t_{d(REF_CLK-TXD)}$		RMII1	2	13.8	ns
	$t_{dd(REF_CLK-TXEN)}$					

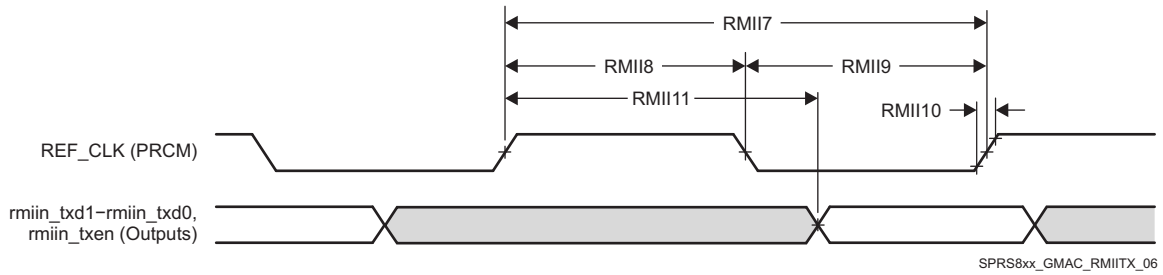

図 7-57. GMAC Transmit Interface Timing RMIIn Operation

In 表 7-80 are presented the specific groupings of signals (IOSET) for use with GMAC RMII signals.

Copyright © 2015–2019, Texas Instruments Incorporated

表 7-80. GMAC RMII IOSETs

SIGNALS	IOSET1		IOSET2	
	BALL	MUX	BALL	MUX
GMAC RMII1				
RMII_MHZ_50_CLK	U3	0		
rmii1_txd1	V5	2		
rmii1_txd0	V4	2		
rmii1_rxd1	W9	2		
rmii1_rxd0	V9	2		
rmii1_rxer	Y1	2		
rmii1_txen	U5	2		
rmii1_crs	V2	2		
GMAC RMII0				
RMII_MHZ_50_CLK			U3	0
rmii0_txd1			Y2	1
rmii0_txd0			W2	1
rmii0_rxd1			V6	1
rmii0_rxd0			U6	1
rmii0_txen			V3	1
rmii0_rxer			U7	1
rmii0_crs			V7	1

Manual IO Timings Modes must be used to ensure some IO timings for GMAC. See 表 7-2 *Modes Summary* for a list of IO timings requiring the use of Manual IO Timings Modes. See 表 7-81 *Manual Functions Mapping for GMAC RMII0* for a definition of the Manual modes.

表 7-81 list the A_DELAY and G_DELAY values needed to calculate the correct values to be set in the CFG_x registers.

表 7-81. Manual Functions Mapping for GMAC RMII0

BALL	BALL NAME	GMAC_RMII0_MANUAL1		CFG REGISTER	MUXMODE	
		A_DELAY (ps)	G_DELAY (ps)		0	1
U3	RMII_MHZ_50_CLK	0	0	CFG_RMII_MHZ_50_CLK_IN	RMII_MHZ_50_CLK	
U6	rgmii0_txd0	500	500	CFG_RGMII0_TXD0_IN		rmii0_rxd0
V6	rgmii0_txd1	840	1000	CFG_RGMII0_TXD1_IN		rmii0_rxd1
U7	rgmii0_txd2	360	840	CFG_RGMII0_TXD2_IN		rmii0_rxer
V7	rgmii0_txd3	600	1000	CFG_RGMII0_TXD3_IN		rmii0_crs

Manual IO Timings Modes must be used to ensure some IO timings for GMAC. See 表 7-2 *Modes Summary* for a list of IO timings requiring the use of Manual IO Timings Modes. See 表 7-82 *Manual Functions Mapping for GMAC RMII1* for a definition of the Manual modes.

表 7-82 list the A_DELAY and G_DELAY values needed to calculate the correct values to be set in the CFG_x registers.

表 7-82. Manual Functions Mapping for GMAC RMII1

BALL	BALL NAME	GMAC_RMII1_MANUAL1		CFG REGISTER	MUXMODE	
		A_DELAY (ps)	G_DELAY (ps)		0	2
U3	RMII_MHZ_50_CLK	0	0	CFG_RMII_MHZ_50_CLK_IN	RMII_MHZ_50_CLK	
V9	rgmii0_txctl	300	1000	CFG_RGMII0_TXCTL_IN		rmii1_rxd0

表 7-82. Manual Functions Mapping for GMAC RMII1 (continued)

BALL	BALL NAME	GMAC_RMII1_MANUAL1		CFG REGISTER	MUXMODE	
		A_DELAY (ps)	G_DELAY (ps)		0	2
W9	rgmii0_txc	300	1200	CFG_RGMII0_TXC_IN		rmii1_rxd1
Y1	uart3_txd	300	500	CFG_UART3_TXD_IN		rmii1_rxer
V2	uart3_rxd	400	700	CFG_UART3_RXD_IN		rmii1_crs

7.22.4 GMAC RGMII Timings

> 注意
>
> The IO Timings provided in this section are only valid for some GMAC usage modes when the corresponding Virtual IO Timings or Manual IO Timings are configured as described in the tables found in this section.

表 7-83, 表 7-84 and 図 7-58 present timing requirements for receive RGMIIn operation.

表 7-83. Timing Requirements for rgmiin_rxc - RGMIIn Operation

NO.	PARAMETER	DESCRIPTION	SPEED	MIN	MAX	UNIT
1	$t_{c(RXC)}$	Cycle time, rgmiin_rxc	10 Mbps	360	440	ns
			100 Mbps	36	44	ns
			1000 Mbps	7.2	8.8	ns
2	$t_{w(RXCH)}$	Pulse duration, rgmiin_rxc high	10 Mbps	160	240	ns
			100 Mbps	16	24	ns
			1000 Mbps	3.6	4.4	ns
3	$t_{w(RXCL)}$	Pulse duration, rgmiin_rxc low	10 Mbps	160	240	ns
			100 Mbps	16	24	ns
			1000 Mbps	3.6	4.4	ns
4	$t_{t(RXC)}$	Transition time, rgmiin_rxc	10 Mbps		0.75	ns
			100 Mbps		0.75	ns
			1000 Mbps		0.75	ns

表 7-84. Timing Requirements for GMAC RGMIIn Input Receive for 10/100/1000 Mbps (1)

NO.	PARAMETER	DESCRIPTION	MIN	MAX	UNIT
5	$t_{su(RXD-RXCH)}$	Setup time, receive selected signals valid before rgmiin_rxc high/low	1		ns
6	$t_{h(RXCH-RXD)}$	Hold time, receive selected signals valid after rgmiin_rxc high/low	1		ns

Copyright © 2015–2019, Texas Instruments Incorporated

(1) For RGMII, receive selected signals include: rgmiin_rxd[3:0] and rgmiin_rxctl.

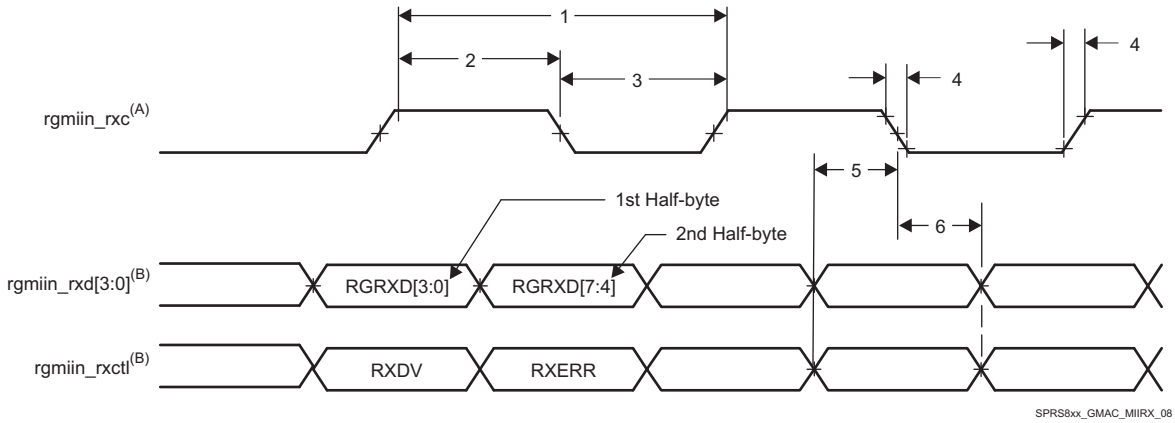

A. rgmiin_rxc must be externally delayed relative to the data and control pins.
B. Data and control information is received using both edges of the clocks. rgmiin_rxd[3:0] carries data bits 3-0 on the rising edge of rgmiin_rxc and data bits 7-4 on the falling edge ofrgmiin_rxc. Similarly, rgmiin_rxctl carries RXDV on rising edge of rgmiin_rxc and RXERR on falling edge of rgmiin_rxc.

図 7-58. GMAC Receive Interface Timing, RGMIIn operation

表 7-85, 表 7-86 and 図 7-59 present switching characteristics for transmit - RGMIIn for 10/100/1000Mbit/s.

表 7-85. Switching Characteristics Over Recommended Operating Conditions for rgmiin_txctl - RGMIIn Operation for 10/100/1000 Mbit/s

NO.	PARAMETER	DESCRIPTION	SPEED	MIN	MAX	UNIT
1	$t_{c(TXC)}$	Cycle time, rgmiin_txc	10 Mbps	360	440	ns
			100 Mbps	36	44	ns
			1000 Mbps	7.2	8.8	ns
2	$t_{w(TXCH)}$	Pulse duration, rgmiin_txc high	10 Mbps	160	240	ns
			100 Mbps	16	24	ns
			1000 Mbps	3.6	4.4	ns
3	$t_{w(TXCL)}$	Pulse duration, rgmiin_txc low	10 Mbps	160	240	ns
			100 Mbps	16	24	ns
			1000 Mbps	3.6	4.4	ns
4	$t_{t(TXC)}$	Transition time, rgmiin_txc	10 Mbps		0.75	ns
			100 Mbps		0.75	ns
			1000 Mbps		0.75	ns

表 7-86. Switching Characteristics for GMAC RGMIIn Output Transmit for 10/100/1000 Mbps (1)

NO.	PARAMETER	DESCRIPTION	MODE	MIN	MAX	UNIT
5	$t_{osu(TXD-TXC)}$	Output Setup time, transmit selected signals valid to rgmiin_txc high/low	RGMII0, Internal Delay Enabled, 1000 Mbps	1.05 (2)		ns
			RGMII0, Internal Delay Enabled, 10/100 Mbps	1.2		ns
			RGMII1, Internal Delay Enabled, 1000 Mbps	1.05 (3)		ns
			RGMII1, Internal Delay Enabled, 10/100 Mbps	1.2		ns

表 7-86. Switching Characteristics for GMAC RGMIIn Output Transmit for 10/100/1000 Mbps (1) (continued)

NO.	PARAMETER	DESCRIPTION	MODE	MIN	MAX	UNIT
6	$t_{oh(TXC-TXD)}$	Output Hold time, transmit selected signals valid after rgmiin_txc high/low	RGMII0, Internal Delay Enabled, 1000 Mbps	1.05 (2)		ns
			RGMII0, Internal Delay Enabled, 10/100 Mbps	1.2		ns
			RGMII1, Internal Delay Enabled, 1000 Mbps	1.05 (3)		ns
			RGMII1, Internal Delay Enabled, 10/100 Mbps	1.2		ns

(1) For RGMII, transmit selected signals include: rgmiin_txd[3:0] and rgmiin_txctl.

(2) RGMII0 1000Mbps operation requires that the 4 data pins rgmii0_txd[3:0] and rgmii0_txctl have their board propagation delays matched within 50pS of rgmii0_txc.

(3) RGMII1 1000Mbps operation requires that the 4 data pins rgmii1_txd[3:0] and rgmii1_txctl have their board propagation delays matched within 50pS of rgmii1_txc.

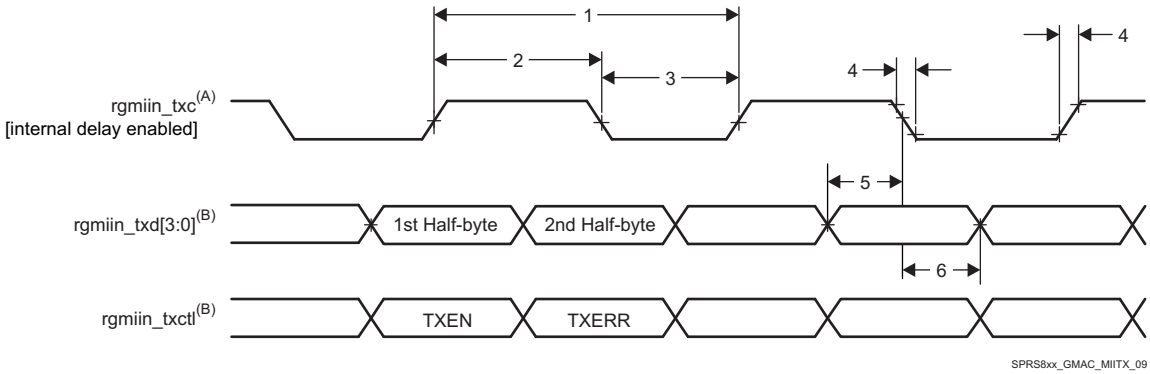

A. TXC is delayed internally before being driven to the rgmiin_txc pin. This internal delay is always enabled.

B. Data and control information is transmitted using both edges of the clocks. rgmiin_txd[3:0] carries data bits 3-0 on the rising edge of rgmiin_txc and data bits 7-4 on the falling edge of rgmiin_txc. Similarly, rgmiin_txctl carries TXEN on rising edge of rgmiin_txc and TXERR of falling edge of rgmiin_txc.

図 7-59. GMAC Transmit Interface Timing RGMIIn operation

In 表 7-87 are presented the specific groupings of signals (IOSET) for use with GMAC RGMII signals.

表 7-87. GMAC RGMII IOSETs

SIGNALS	IOSET3		IOSET4	
	BALL	MUX	BALL	MUX
GMAC RGMII1				
rgmii1_txd3	C3	3		
rgmii1_txd2	C4	3		
rgmii1_txd1	B2	3		
rgmii1_txd0	D6	3		
rgmii1_rxd3	B3	3		
rgmii1_rxd2	B4	3		
rgmii1_rxd1	B5	3		
rgmii1_rxd0	A4	3		
rgmii1_rxctl	A3	3		
rgmii1_txc	D5	3		
rgmii1_txctl	C2	3		
rgmii1_rxc	C5	3		
GMAC RGMII0				
rgmii0_txd3			V7	0

Copyright © 2015–2019, Texas Instruments Incorporated

表 7-87. GMAC RGMII IOSETs (continued)

SIGNALS	IOSET3		IOSET4	
	BALL	MUX	BALL	MUX
rgmii0_txd2			U7	0
rgmii0_txd1			V6	0
rgmii0_txd0			U6	0
rgmii0_rxd3			V4	0
rgmii0_rxd2			V3	0
rgmii0_rxd1			Y2	0
rgmii0_rxd0			W2	0
rgmii0_txc			W9	0
rgmii0_rxctl			V5	0
rgmii0_rxc			U5	0
rgmii0_txctl			V9	0

注: To configure the desired Manual IO Timing Mode the user must follow the steps described in section Manual IO Timing Modes of the Device TRM.

The associated registers to configure are listed in the **CFG REGISTER** column. For more information see the Control Module chapter in the Device TRM.

Manual IO Timings Modes must be used to ensure some IO timings for GMAC. See 表 7-2 *Modes Summary* for a list of IO timings requiring the use of Manual IO Timings Modes. See 表 7-88 *Manual Functions Mapping for GMAC RGMII0* for a definition of the Manual modes.

表 7-88 lists the A_DELAY and G_DELAY values needed to calculate the correct values to be set in the CFG_x registers.

表 7-88. Manual Functions Mapping for GMAC RGMII0

BALL	BALL NAME	GMAC_RGMII0_MANUAL1		CFG REGISTER	MUXMODE
		A_DELAY (ps)	G_DELAY (ps)		0
U5	rgmii0_rxc	260	0	CFG_RGMII0_RXC_IN	rgmii0_rxc
V5	rgmii0_rxctl	0	1412	CFG_RGMII0_RXCTL_IN	rgmii0_rxctl
W2	rgmii0_rxd0	123	1047	CFG_RGMII0_RXD0_IN	rgmii0_rxd0
Y2	rgmii0_rxd1	139	1081	CFG_RGMII0_RXD1_IN	rgmii0_rxd1
V3	rgmii0_rxd2	195	1100	CFG_RGMII0_RXD2_IN	rgmii0_rxd2
V4	rgmii0_rxd3	239	1216	CFG_RGMII0_RXD3_IN	rgmii0_rxd3
W9	rgmii0_txc	89	0	CFG_RGMII0_TXC_OUT	rgmii0_txc
V9	rgmii0_txctl	15	125	CFG_RGMII0_TXCTL_OUT	rgmii0_txctl
U6	rgmii0_txd0	339	162	CFG_RGMII0_TXD0_OUT	rgmii0_txd0
V6	rgmii0_txd1	146	94	CFG_RGMII0_TXD1_OUT	rgmii0_txd1
U7	rgmii0_txd2	0	27	CFG_RGMII0_TXD2_OUT	rgmii0_txd2
V7	rgmii0_txd3	291	205	CFG_RGMII0_TXD3_OUT	rgmii0_txd3

Manual IO Timings Modes must be used to ensure some IO timings for GMAC. See 表 7-2 *Modes Summary* for a list of IO timings requiring the use of Manual IO Timings Modes. See 表 7-89 *Manual Functions Mapping for GMAC RGMII1* for a definition of the Manual modes.

表 7-89 lists the A_DELAY and G_DELAY values needed to calculate the correct values to be set in the CFG_x registers.

表 7-89. Manual Functions Mapping for GMAC RGMII1

BALL	BALL NAME	GMAC_RGMII1_MANUAL1		CFG REGISTER	MUXMODE
		A_DELAY (ps)	G_DELAY (ps)		3
C5	vin2a_d18	411	0	CFG_VIN2A_D18_IN	rgmii1_rxc
A3	vin2a_d19	0	382	CFG_VIN2A_D19_IN	rgmii1_rxctl
B3	vin2a_d20	320	750	CFG_VIN2A_D20_IN	rgmii1_rxd3
B4	vin2a_d21	192	836	CFG_VIN2A_D21_IN	rgmii1_rxd2
B5	vin2a_d22	294	669	CFG_VIN2A_D22_IN	rgmii1_rxd1
A4	vin2a_d23	50	700	CFG_VIN2A_D23_IN	rgmii1_rxd0
D5	vin2a_d12	0	0	CFG_VIN2A_D12_OUT	rgmii1_txc
C2	vin2a_d13	219	101	CFG_VIN2A_D13_OUT	rgmii1_txctl
C3	vin2a_d14	92	58	CFG_VIN2A_D14_OUT	rgmii1_txd3
C4	vin2a_d15	135	100	CFG_VIN2A_D15_OUT	rgmii1_txd2
B2	vin2a_d16	154	101	CFG_VIN2A_D16_OUT	rgmii1_txd1
D6	vin2a_d17	78	27	CFG_VIN2A_D17_OUT	rgmii1_txd0

7.23 eMMC/SD/SDIO

The Device includes the following external memory interfaces 4 MultiMedia Card/Secure Digital/Secure Digital Input Output Interface (MMC/SD/SDIO).

注: The eMMC/SD/SDIOi (i = 1 to 4) controller is also referred to as MMCi.

7.23.1 MMC1—SD Card Interface

MMC1 interface is compliant with the SD Standard v3.01 and it supports the following SD Card applications:

- Default speed, 4-bit data, SDR, half-cycle
- High speed, 4-bit data, SDR, half-cycle
- SDR12, 4-bit data, half-cycle
- SDR25, 4-bit data, half-cycle
- UHS-I SDR50, 4-bit data, half-cycle
- UHS-I SDR104, 4-bit data, half-cycle
- UHS-I DDR50, 4-bit data

注: For more information, see the eMMC/SD/SDIO chapter of the Device TRM.

7.23.1.1 Default speed, 4-bit data, SDR, half-cycle

表 7-90 and 表 7-91 present Timing requirements and Switching characteristics for MMC1 - Default Speed in receiver and transmitter mode (see 図 7-60 and 図 7-61)

表 7-90. Timing Requirements for MMC1 - SD Card Default Speed Mode

NO.	PARAMETER	DESCRIPTION	MIN	MAX	UNIT
DSSD5	$t_{su(cmdV-clkH)}$	Setup time, mmc1_cmd valid before mmc1_clk rising clock edge	5.11		ns
DSSD6	$t_{h(clkH-cmdV)}$	Hold time, mmc1_cmd valid after mmc1_clk rising clock edge	20.46		ns
DSSD7	$t_{su(dV-clkH)}$	Setup time, mmc1_dat[3:0] valid before mmc1_clk rising clock edge	5.11		ns
DSSD8	$t_{h(clkH-dV)}$	Hold time, mmc1_dat[3:0] valid after mmc1_clk rising clock edge	20.46		ns

Copyright © 2015–2019, Texas Instruments Incorporated

表 7-91. Switching Characteristics for MMC1 - SD Card Default Speed Mode

NO.	PARAMETER	DESCRIPTION	MIN	MAX	UNIT
DSSD0	fop(clk)	Operating frequency, mmc1_clk		24	MHz
DSSD1	$t_{w(clkH)}$	Pulse duration, mmc1_clk high	0.5*P-0.185	(1)	ns
DSSD2	$t_{w(clkL)}$	Pulse duration, mmc1_clk low	0.5*P-0.185	(1)	ns
DSSD3	$t_{d(clkL-cmdV)}$	Delay time, mmc1_clk falling clock edge to mmc1_cmd transition	-14.93	14.93	ns
DSSD4	$t_{d(clkL-dV)}$	Delay time, mmc1_clk falling clock edge to mmc1_dat[3:0] transition	-14.93	14.93	ns

(1) P = output mmc1_clk period in ns

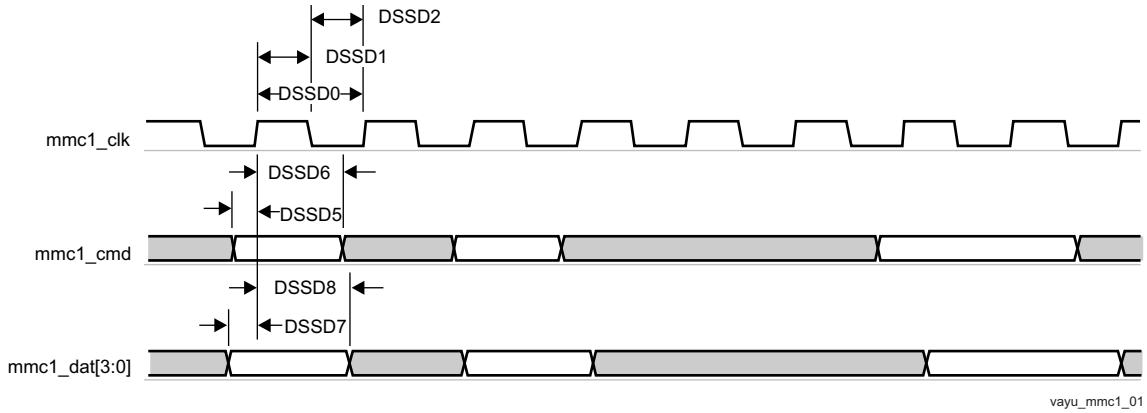

図 7-60. MMC/SD/SDIO in - Default Speed - Receiver Mode

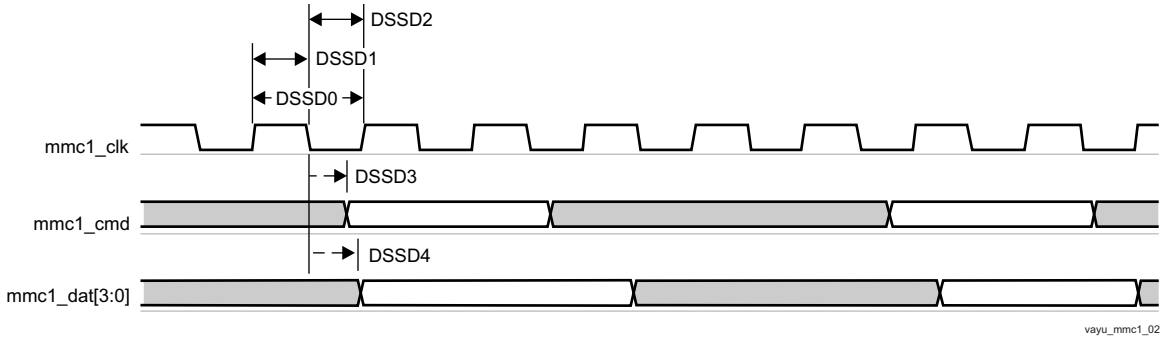

図 7-61. MMC/SD/SDIO in - Default Speed - Transmitter Mode

7.23.1.2 High speed, 4-bit data, SDR, half-cycle

表 7-92 and 表 7-93 present Timing requirements and Switching characteristics for MMC1 - High Speed in receiver and transmitter mode (see 図 7-62 and 図 7-63)

表 7-92. Timing Requirements for MMC1 - SD Card High Speed Mode

NO.	PARAMETER	DESCRIPTION	MIN	MAX	UNIT
HSSD3	$t_{su(cmdV-clkH)}$	Setup time, mmc1_cmd valid before mmc1_clk rising clock edge	5.3		ns
HSSD4	$t_{h(clkH-cmdV)}$	Hold time, mmc1_cmd valid after mmc1_clk rising clock edge	2.6		ns
HSSD7	$t_{su(dV-clkH)}$	Setup time, mmc1_dat[3:0] valid before mmc1_clk rising clock edge	5.3		ns
HSSD8	$t_{h(clkH-dV)}$	Hold time, mmc1_dat[3:0] valid after mmc1_clk rising clock edge	2.6		ns

表 7-93. Switching Characteristics for MMC1 - SD Card High Speed Mode

NO.	PARAMETER	DESCRIPTION	MIN	MAX	UNIT
HSSD1	fop(clk)	Operating frequency, mmc1_clk		48	MHz
HSSD2H	$t_{w(clkH)}$	Pulse duration, mmc1_clk high	0.5*P-0.185	(1)	ns
HSSD2L	$t_{w(clkL)}$	Pulse duration, mmc1_clk low	0.5*P-0.185	(1)	ns
HSSD5	$t_{d(clkL-cmdV)}$	Delay time, mmc1_clk falling clock edge to mmc1_cmd transition	-7.6	3.6	ns
HSSD6	$t_{d(clkL-dV)}$	Delay time, mmc1_clk falling clock edge to mmc1_dat[3:0] transition	-7.6	3.6	ns

(1) P = output mmc1_clk period in ns

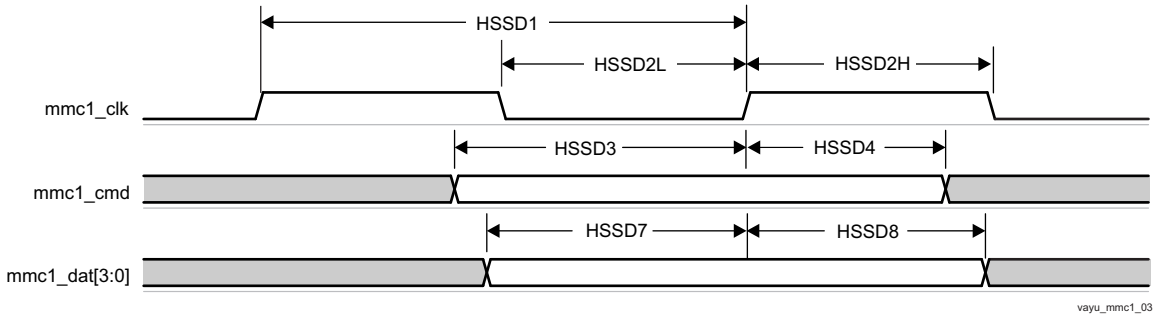

図 7-62. MMC/SD/SDIO in - High Speed - Receiver Mode

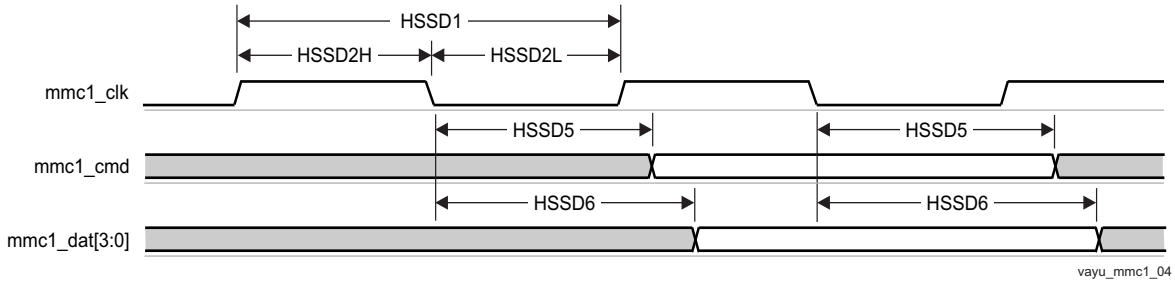

図 7-63. MMC/SD/SDIO in - High Speed - Transmitter Mode

7.23.1.3 SDR12, 4-bit data, half-cycle

表 7-94 and 表 7-95 present Timing requirements and Switching characteristics for MMC1 - SDR12 in receiver and transmitter mode(see 図 7-64 and 図 7-65).

表 7-94. Timing Requirements for MMC1 - SD Card SDR12 Mode

NO.	PARAMETER	DESCRIPTION	MODE	MIN	MAX	UNIT
SDR125	$t_{su(cmdV-clkH)}$	Setup time, mmc1_cmd valid before mmc1_clk rising clock edge		25.99		ns
SDR126	$t_{h(clkH-cmdV)}$	Hold time, mmc1_cmd valid after mmc1_clk rising clock edge	Pad Loopback Clock	1.6		ns
			Internal Loopback Clock	1.6		ns
SDR127	$t_{su(dV-clkH)}$	Setup time, mmc1_dat[3:0] valid before mmc1_clk rising clock edge		25.99		ns

Copyright © 2015–2019, Texas Instruments Incorporated

表 7-94. Timing Requirements for MMC1 - SD Card SDR12 Mode (continued)

NO.	PARAMETER	DESCRIPTION	MODE	MIN	MAX	UNIT
SDR128	$t_{h(clkH-dV)}$	Hold time, mmc1_dat[3:0] valid after mmc1_clk rising clock edge	Pad Loopback Clock	1.6		ns
			Internal Loopback Clock	1.6		ns

表 7-95. Switching Characteristics for MMC1 - SD Card SDR12 Mode

NO.	PARAMETER	DESCRIPTION	MIN	MAX	UNIT
SDR120	fop(clk)	Operating frequency, mmc1_clk		24	MHz
SDR121	$t_{w(clkH)}$	Pulse duration, mmc1_clk high	0.5*P-0.185	(1)	ns
SDR122	$t_{w(clkL)}$	Pulse duration, mmc1_clk low	0.5*P-0.185	(1)	ns
SDR123	$t_{d(clkL-cmdV)}$	Delay time, mmc1_clk falling clock edge to mmc1_cmd transition	-19.13	16.93	ns
SDR124	$t_{d(clkL-dV)}$	Delay time, mmc1_clk falling clock edge to mmc1_dat[3:0] transition	-19.13	16.93	ns

(1) P = output mmc1_clk period in ns

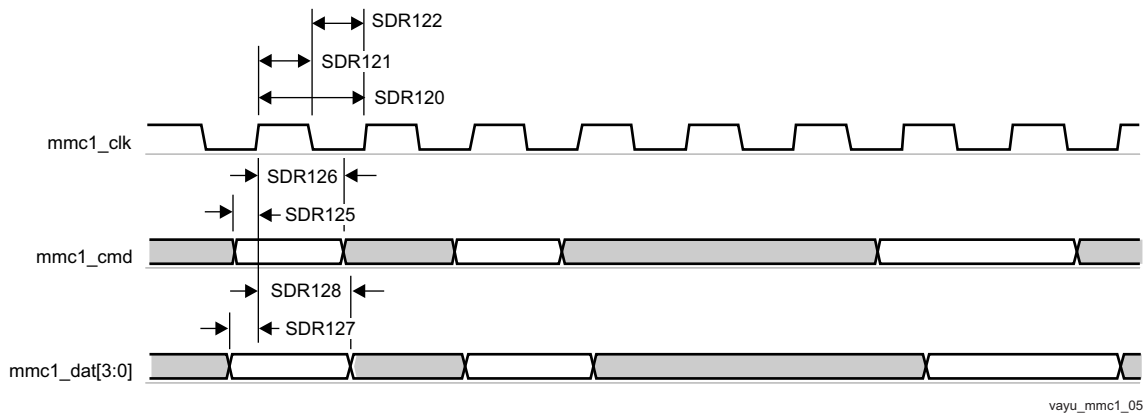

図 7-64. MMC/SD/SDIO in - High Speed SDR12 - Receiver Mode

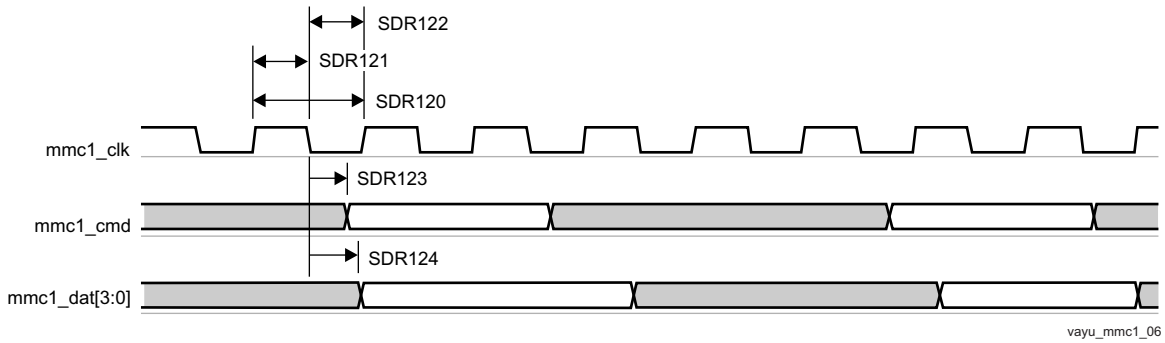

図 7-65. MMC/SD/SDIO in - High Speed SDR12 - Transmitter Mode

7.23.1.4 SDR25, 4-bit data, half-cycle

表 7-96 and 表 7-97 present Timing requirements and Switching characteristics for MMC1 - SDR25 in receiver and transmitter mode (see 図 7-66 and 図 7-67).

表 7-96. Timing Requirements for MMC1 - SD Card SDR25 Mode

NO.	PARAMETER	DESCRIPTION	MODE	MIN	MAX	UNIT
SDR253	$t_{su(cmdV-clkH)}$	Setup time, mmc1_cmd valid before mmc1_clk rising clock edge		5.3		ns
SDR254	$t_{h(clkH-cmdV)}$	Hold time, mmc1_cmd valid after mmc1_clk rising clock edge		1.6		ns
SDR257	$t_{su(dV-clkH)}$	Setup time, mmc1_dat[3:0] valid before mmc1_clk rising clock edge		5.3		ns
SDR258	$t_{h(clkH-dV)}$	Hold time, mmc1_dat[3:0] valid after mmc1_clk rising clock edge	Pad Loopback Clock	1.6		ns
			Internal Loopback Clock	1.6		ns

表 7-97. Switching Characteristics for MMC1 - SD Card SDR25 Mode

NO.	PARAMETER	DESCRIPTION	MIN	MAX	UNIT
SDR251	fop(clk)	Operating frequency, mmc1_clk		48	MHz
SDR252H	$t_{w(clkH)}$	Pulse duration, mmc1_clk high	0.5*P-0.185	(1)	ns
SDR252L	$t_{w(clkL)}$	Pulse duration, mmc1_clk low	0.5*P-0.185	(1)	ns
SDR255	$t_{d(clkL-cmdV)}$	Delay time, mmc1_clk falling clock edge to mmc1_cmd transition	-8.8	6.6	ns
SDR256	$t_{d(clkL-dV)}$	Delay time, mmc1_clk falling clock edge to mmc1_dat[3:0] transition	-8.8	6.6	ns

(1) P = output mmc1_clk period in ns

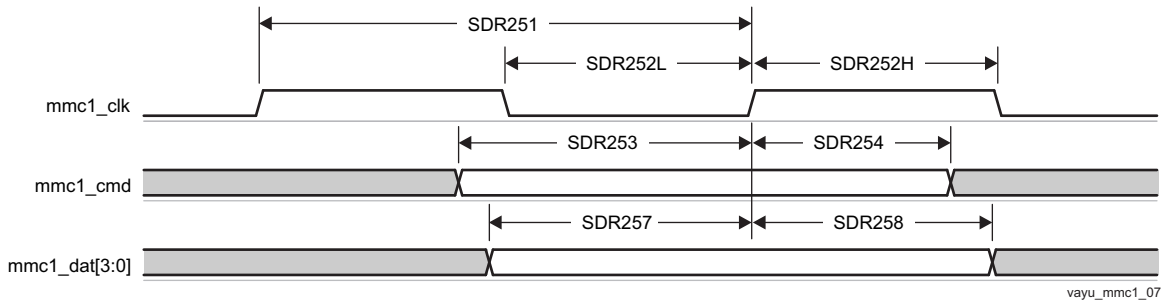

図 7-66. MMC/SD/SDIO in - High Speed SDR25 - Receiver Mode

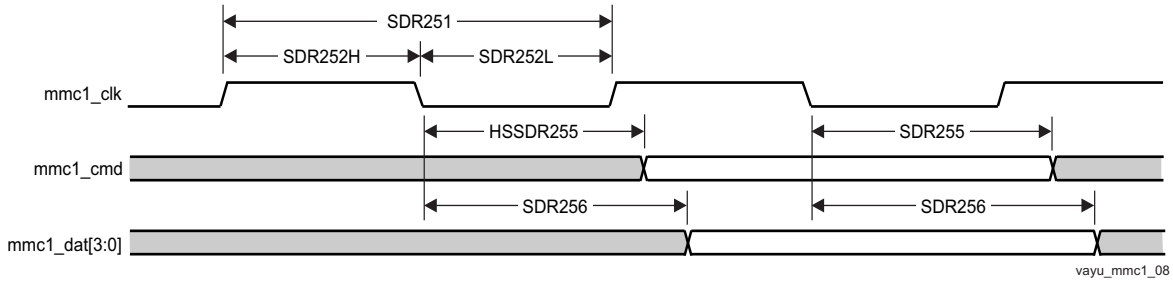

図 7-67. MMC/SD/SDIO in - High Speed SDR25 - Transmitter Mode

7.23.1.5 UHS-I SDR50, 4-bit data, half-cycle

表 7-98 and 表 7-99 present Timing requirements and Switching characteristics for MMC1 - SDR50 in receiver and transmitter mode (see 図 7-68 and 図 7-69).

Copyright © 2015–2019, Texas Instruments Incorporated

表 7-98. Timing Requirements for MMC1 - SD Card SDR50 Mode

NO.	PARAMETER	DESCRIPTION	MODE	MIN	MAX	UNIT
SDR503	$t_{su(cmdV-clkH)}$	Setup time, mmc1_cmd valid before mmc1_clk rising clock edge		1.72		ns
SDR504	$t_{h(clkH-cmdV)}$	Hold time, mmc1_cmd valid after mmc1_clk rising clock edge		1.6		ns
SDR507	$t_{su(dV-clkH)}$	Setup time, mmc1_dat[3:0] valid before mmc1_clk rising clock edge		1.72		ns
SDR508	$t_{h(clkH-dV)}$	Hold time, mmc1_dat[3:0] valid after mmc1_clk rising clock edge	Pad Loopback Clock	1.6		ns
			Internal Loopback Clock	1.6		ns

表 7-99. Switching Characteristics for MMC1 - SD Card SDR50 Mode

NO.	PARAMETER	DESCRIPTION	MIN	MAX	UNIT
SDR501	fop(clk)	Operating frequency, mmc1_clk		96	MHz
SDR502H	$t_{w(clkH)}$	Pulse duration, mmc1_clk high	0.5*P-0.185	(1)	ns
SDR502L	$t_{w(clkL)}$	Pulse duration, mmc1_clk low	0.5*P-0.185	(1)	ns
SDR505	$t_{d(clkL-cmdV)}$	Delay time, mmc1_clk falling clock edge to mmc1_cmd transition	-3.66	1.46	ns
SDR506	$t_{d(clkL-dV)}$	Delay time, mmc1_clk falling clock edge to mmc1_dat[3:0] transition	-3.66	1.46	ns

(1) P = output mmc1_clk period in ns

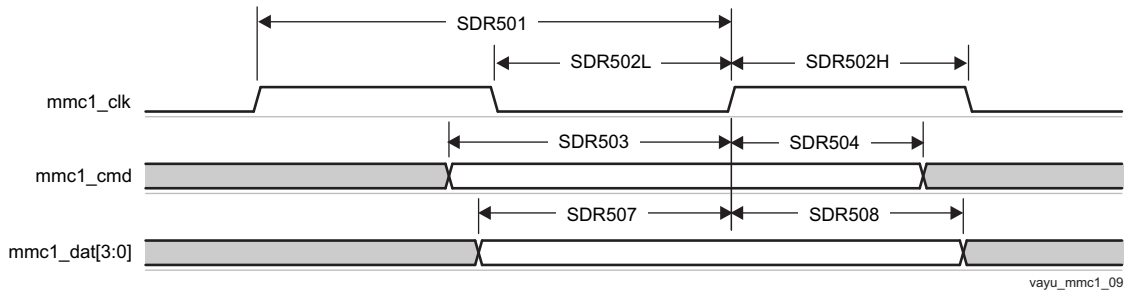

図 7-68. MMC/SD/SDIO in - High Speed SDR50 - Receiver Mode

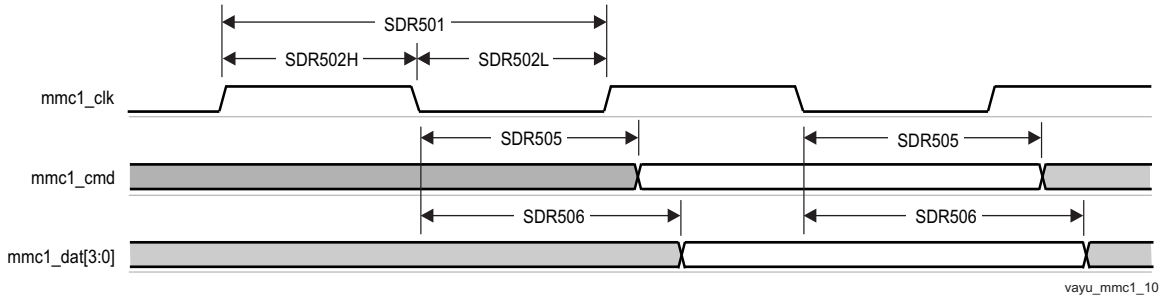

図 7-69. MMC/SD/SDIO in - High Speed SDR50 - Transmitter Mode

7.23.1.6 UHS-I SDR104, 4-bit data, half-cycle

表 7-100 presents Timing requirements and Switching characteristics for MMC1 - SDR104 in receiver and transmitter mode (see 図 7-70 and 図 7-71)

表 7-100. Switching Characteristics for MMC1 - SD Card SDR104 Mode

NO.	PARAMETER	DESCRIPTION	MIN	MAX	UNIT
SDR1041	fop(clk)	Operating frequency, mmc1_clk		192	MHz
SDR1042 H	$t_{w(clkH)}$	Pulse duration, mmc1_clk high	0.5*P-0.185	(1)	ns
SDR1042 L	$t_{w(clkL)}$	Pulse duration, mmc1_clk low	0.5*P-0.185	(1)	ns
SDR1045	$t_{d(clkL-cmdV)}$	Delay time, mmc1_clk falling clock edge to mmc1_cmd transition	-1.09	0.49	ns
SDR1046	$t_{d(clkL-dV)}$	Delay time, mmc1_clk falling clock edge to mmc1_dat[3:0] transition	-1.09	0.49	ns

(1) P = output mmc1_clk period in ns

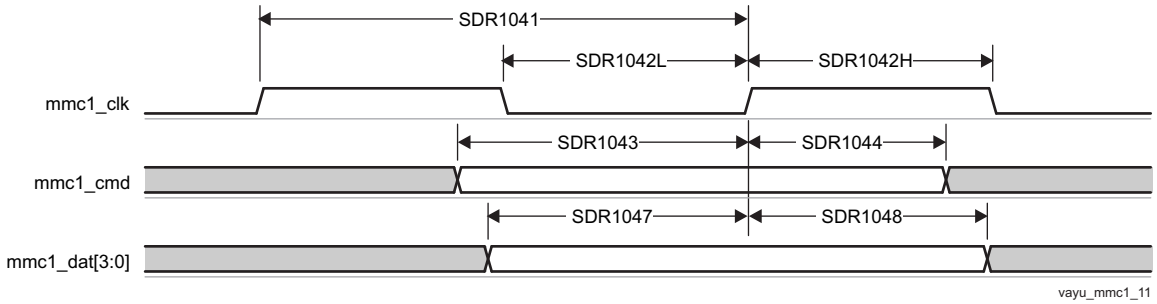

図 7-70. MMC/SD/SDIO in - High Speed SDR104 - Receiver Mode

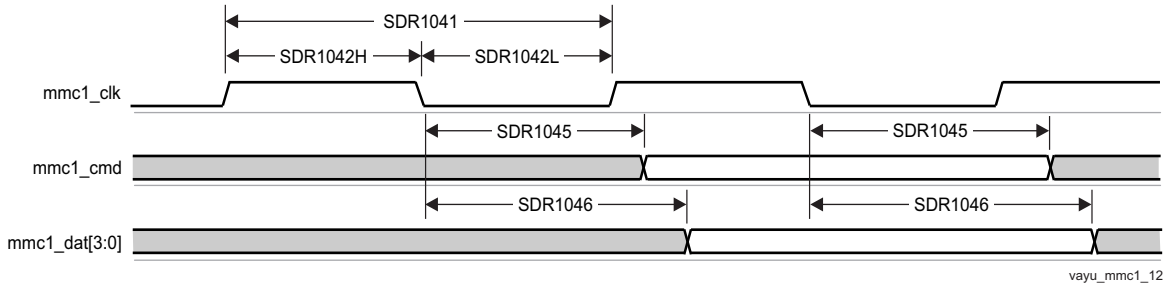

図 7-71. MMC/SD/SDIO in - High Speed SDR104 - Transmitter Mode

7.23.1.7 UHS-I DDR50, 4-bit data

表 7-101 and 表 7-102 present Timing requirements and Switching characteristics for MMC1 - DDR50 in receiver and transmitter mode (see 図 7-72 and 図 7-73).

表 7-101. Timing Requirements for MMC1 - SD Card DDR50 Mode

NO.	PARAMETER	DESCRIPTION	MODE	MIN	MAX	UNIT
DDR505	$t_{su(cmdV-clk)}$	Setup time, mmc1_cmd valid before mmc1_clk transition		1.79		ns
DDR506	$t_{h(clk-cmdV)}$	Hold time, mmc1_cmd valid after mmc1_clk transition		1.6		ns
DDR507	$t_{su(dV-clk)}$	Setup time, mmc1_dat[3:0] valid before mmc1_clk transition	Pad Loopback	1.79		ns
			Internal Loopback	1.79		ns
DDR508	$t_{h(clk-dV)}$	Hold time, mmc1_dat[3:0] valid after mmc1_clk transition	Pad Loopback	1.6		ns
			Internal Loopback	1.6		ns

Copyright © 2015–2019, Texas Instruments Incorporated

表 7-102. Switching Characteristics for MMC1 - SD Card DDR50 Mode

NO.	PARAMETER	DESCRIPTION	MIN	MAX	UNIT
DDR500	fop(clk)	Operating frequency, mmc1_clk		48	MHz
DDR501	$t_{w(clkH)}$	Pulse duration, mmc1_clk high	0.5*P-0.185	(1)	ns
DDR502	$t_{w(clkL)}$	Pulse duration, mmc1_clk low	0.5*P-0.185	(1)	ns
DDR503	$t_{d(clk-cmdV)}$	Delay time, mmc1_clk transition to mmc1_cmd transition	1.225	6.6	ns
DDR504	$t_{d(clk-dV)}$	Delay time, mmc1_clk transition to mmc1_dat[3:0] transition	1.225	6.6	ns

(1) P = output mmc1_clk period in ns

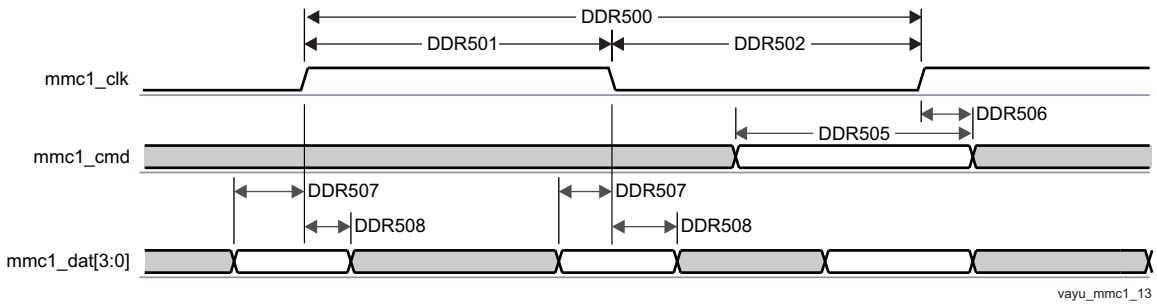

図 7-72. SDMMC - High Speed SD - DDR - Data/Command Receive

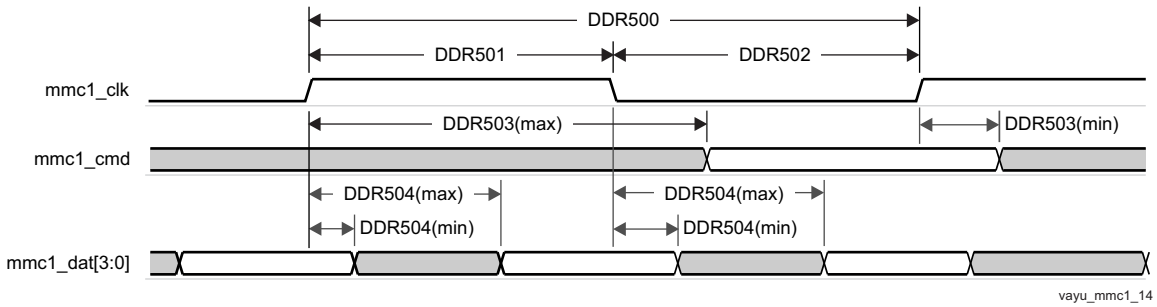

図 7-73. SDMMC - High Speed SD - DDR - Data/Command Transmit

注: To configure the desired virtual mode the user must set MODESELECT bit and DELAYMODE bitfield for each corresponding pad control register.

The pad control registers are presented in 表 4-3 and described in Device TRM, *Control Module Chapter*.

Virtual IO Timings Modes must be used to ensure some IO timings for MMC1. See 表 7-2 *Modes Summary* for a list of IO timings requiring the use of Virtual IO Timings Modes. See 表 7-103 *Virtual Functions Mapping for MMC1* for a definition of the Virtual modes.

表 7-103 presents the values for DELAYMODE bitfield.

表 7-103. Virtual Functions Mapping for MMC1

BALL	BALL NAME	Delay Mode Value					MUXMODE[15:0]
		MMC1_VIRTUAL1	MMC1_VIRTUAL2	MMC1_VIRTUAL5	MMC1_VIRTUAL6	MMC1_VIRTUAL7	0
W6	mmc1_clk	11	10	7	6	5	mmc1_clk
Y6	mmc1_cmd	11	10	7	6	5	mmc1_cmd

表 7-103. Virtual Functions Mapping for MMC1 (continued)

BALL	BALL NAME	Delay Mode Value					MUXMODE[15:0]
		MMC1_VIRTUAL1	MMC1_VIRTUAL2	MMC1_VIRTUAL5	MMC1_VIRTUAL6	MMC1_VIRTUAL7	0
AA6	mmc1_dat0	11	10	7	6	5	mmc1_dat0
Y4	mmc1_dat1	11	10	7	6	5	mmc1_dat1
AA5	mmc1_dat2	11	10	7	6	5	mmc1_dat2
Y3	mmc1_dat3	11	10	7	6	5	mmc1_dat3

注: To configure the desired Manual IO Timing Mode the user must follow the steps described in section Manual IO Timing Modes of the Device TRM.

The associated registers to configure are listed in the **CFG REGISTER** column. For more information see the Control Module chapter in the Device TRM.

Manual IO Timings Modes must be used to ensure some IO timings for MMC1. See 表 7-2 *Modes Summary* for a list of IO timings requiring the use of Manual IO Timings Modes. See 表 7-104 *Manual Functions Mapping for MMC1* for a definition of the Manual modes.

表 7-104 lists the A_DELAY and G_DELAY values needed to calculate the correct values to be set in the CFG_x registers.

Copyright © 2015–2019, Texas Instruments Incorporated

表 7-104. Manual Functions Mapping for MMC1

BALL	BALL NAME	MMC1_DDR_MANUAL1		MMC1_SDR104_MANUAL1		CFG REGISTER	MUXMODE
		A_DELAY (ps)	G_DELAY (ps)	A_DELAY (ps)	G_DELAY (ps)		0
W6	mmc1_clk	1076	330	-	-	CFG_MMC1_CLK_IN	mmc1_clk
W6	mmc1_clk	1271	0	600	400	CFG_MMC1_CLK_OUT	mmc1_clk
Y6	mmc1_cmd	722	0	-	-	CFG_MMC1_CMD_IN	mmc1_cmd
Y6	mmc1_cmd	0	0	0	0	CFG_MMC1_CMD_OEN	mmc1_cmd
Y6	mmc1_cmd	0	0	0	0	CFG_MMC1_CMD_OUT	mmc1_cmd
AA6	mmc1_dat0	751	0	-	-	CFG_MMC1_DAT0_IN	mmc1_dat0
AA6	mmc1_dat0	0	0	0	0	CFG_MMC1_DAT0_OEN	mmc1_dat0
AA6	mmc1_dat0	20	0	30	0	CFG_MMC1_DAT0_OUT	mmc1_dat0
Y4	mmc1_dat1	256	0	-	-	CFG_MMC1_DAT1_IN	mmc1_dat1
Y4	mmc1_dat1	0	0	0	0	CFG_MMC1_DAT1_OEN	mmc1_dat1
Y4	mmc1_dat1	0	0	0	0	CFG_MMC1_DAT1_OUT	mmc1_dat1
AA5	mmc1_dat2	263	0	-	-	CFG_MMC1_DAT2_IN	mmc1_dat2
AA5	mmc1_dat2	0	0	0	0	CFG_MMC1_DAT2_OEN	mmc1_dat2
AA5	mmc1_dat2	0	0	0	0	CFG_MMC1_DAT2_OUT	mmc1_dat2
Y3	mmc1_dat3	0	0	-	-	CFG_MMC1_DAT3_IN	mmc1_dat3
Y3	mmc1_dat3	0	0	0	0	CFG_MMC1_DAT3_OEN	mmc1_dat3
Y3	mmc1_dat3	0	0	0	0	CFG_MMC1_DAT3_OUT	mmc1_dat3

7.23.2 MMC2 — eMMC

MMC2 interface is compliant with the JC64 eMMC Standard v4.5 and it supports the following eMMC applications:

- Standard JC64 SDR, 8-bit data, half cycle
- High-speed JC64 SDR, 8-bit data, half cycle
- High-speed JC64 DDR, 8-bit data
- High-speed HS200 JC64 SDR, 8-bit data, half cycle

注: For more information, see the eMMC/SD/SDIO chapter of the Device TRM.

7.23.2.1 Standard JC64 SDR, 8-bit data, half cycle

表 7-105 and 表 7-106 present Timing requirements and Switching characteristics for MMC2 - Standard SDR in receiver and transmitter mode (see 図 7-74 and 図 7-75).

表 7-105. Timing Requirements for MMC2 - JC64 Standard SDR Mode

NO.	PARAMETER	DESCRIPTION	MIN	MAX	UNIT
SSDR5	$t_{su(cmdV-clkH)}$	Setup time, mmc2_cmd valid before mmc2_clk rising clock edge	13.19		ns
SSDR6	$t_{h(clkH-cmdV)}$	Hold time, mmc2_cmd valid after mmc2_clk rising clock edge	8.4		ns
SSDR7	$t_{su(dV-clkH)}$	Setup time, mmc2_dat[7:0] valid before mmc2_clk rising clock edge	13.19		ns
SSDR8	$t_{h(clkH-dV)}$	Hold time, mmc2_dat[7:0] valid after mmc2_clk rising clock edge	8.4		ns

Copyright © 2015–2019, Texas Instruments Incorporated

表 7-106. Switching Characteristics for MMC2 - JC64 Standard SDR Mode

NO.	PARAMETER	DESCRIPTION	MIN	MAX	UNIT
SSDR1	fop(clk)	Operating frequency, mmc2_clk		24	MHz
SSDR2H	$t_{w(clkH)}$	Pulse duration, mmc2_clk high	0.5*P-0.172	(1)	ns
SSDR2L	$t_{w(clkL)}$	Pulse duration, mmc2_clk low	0.5*P-0.172	(1)	ns
SSDR3	$t_{d(clkL-cmdV)}$	Delay time, mmc2_clk falling clock edge to mmc2_cmd transition	-16.96	16.96	ns
SSDR4	$t_{d(clkL-dV)}$	Delay time, mmc2_clk falling clock edge to mmc2_dat[7:0] transition	-16.96	16.96	ns

(1) P = output mmc2_clk period in ns

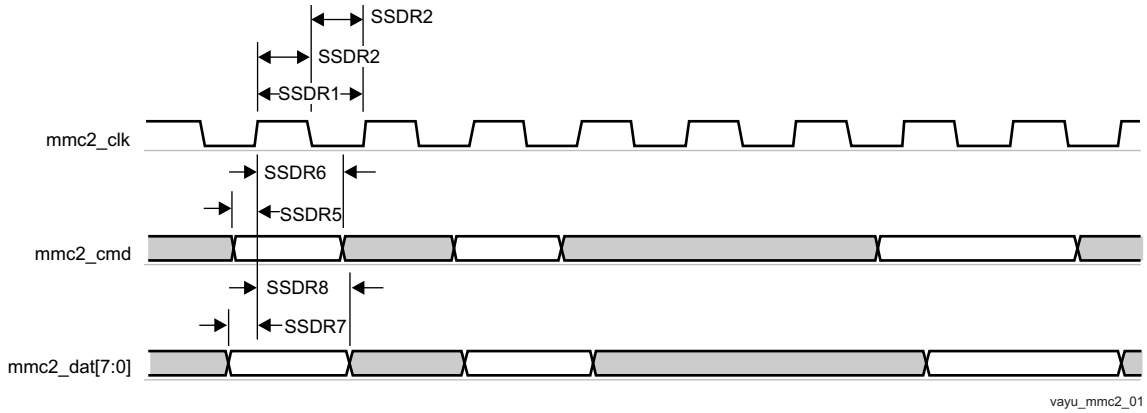

図 7-74. MMC/SD/SDIO in - Standard JC64 - Receiver Mode

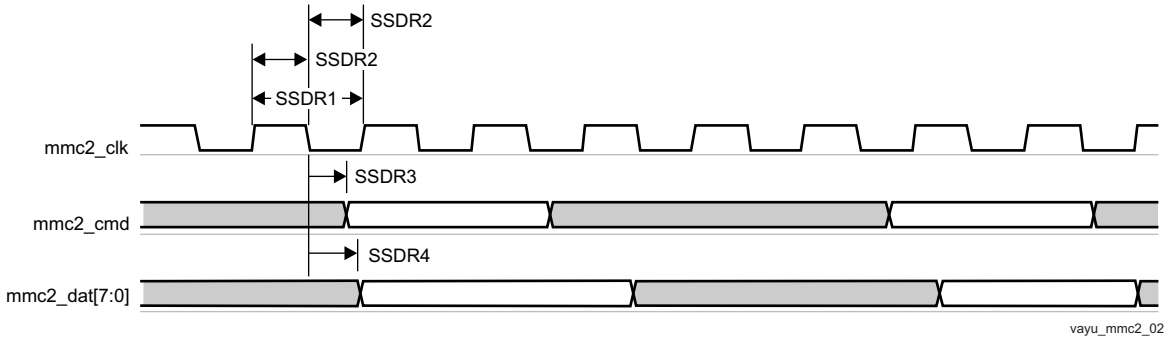

図 7-75. MMC/SD/SDIO in - Standard JC64 - Transmitter Mode

7.23.2.2 High-speed JC64 SDR, 8-bit data, half cycle

表 7-107 and 表 7-108 present Timing requirements and Switching characteristics for MMC2 - High speed SDR in receiver and transmitter mode (see 図 7-76 and 図 7-77).

表 7-107. Timing Requirements for MMC2 - JC64 High Speed SDR Mode

NO.	PARAMETER	DESCRIPTION	MIN	MAX	UNIT
JC643	$t_{su(cmdV-clkH)}$	Setup time, mmc2_cmd valid before mmc2_clk rising clock edge	5.6		ns
JC644	$t_{h(clkH-cmdV)}$	Hold time, mmc2_cmd valid after mmc2_clk rising clock edge	2.6		ns
JC647	$t_{su(dV-clkH)}$	Setup time, mmc2_dat[7:0] valid before mmc2_clk rising clock edge	5.6		ns
JC648	$t_{h(clkH-dV)}$	Hold time, mmc2_dat[7:0] valid after mmc2_clk rising clock edge	2.6		ns

表 7-108. Switching Characteristics for MMC2 - JC64 High Speed SDR Mode

NO.	PARAMETER	DESCRIPTION	MIN	MAX	UNIT
JC641	fop(clk)	Operating frequency, mmc2_clk		48	MHz
JC642H	$t_{w(clkH)}$	Pulse duration, mmc2_clk high	0.5*P-0.172	(1)	ns
JC642L	$t_{w(clkL)}$	Pulse duration, mmc2_clk low	0.5*P-0.172	(1)	ns
JC645	$t_{d(clkL-cmdV)}$	Delay time, mmc2_clk falling clock edge to mmc2_cmd transition	-6.64	6.64	ns
JC646	$t_{d(clkL-dV)}$	Delay time, mmc2_clk falling clock edge to mmc2_dat[7:0] transition	-6.64	6.64	ns

(1) P = output mmc2_clk period in ns

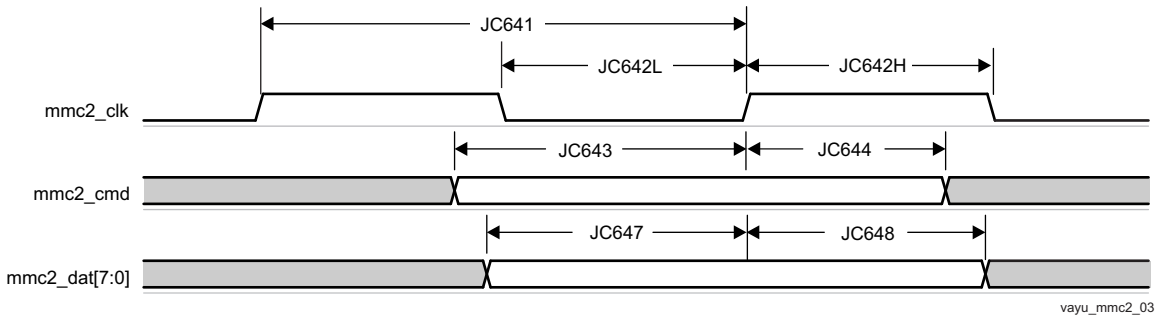

図 7-76. MMC/SD/SDIO in - High Speed JC64 - Receiver Mode

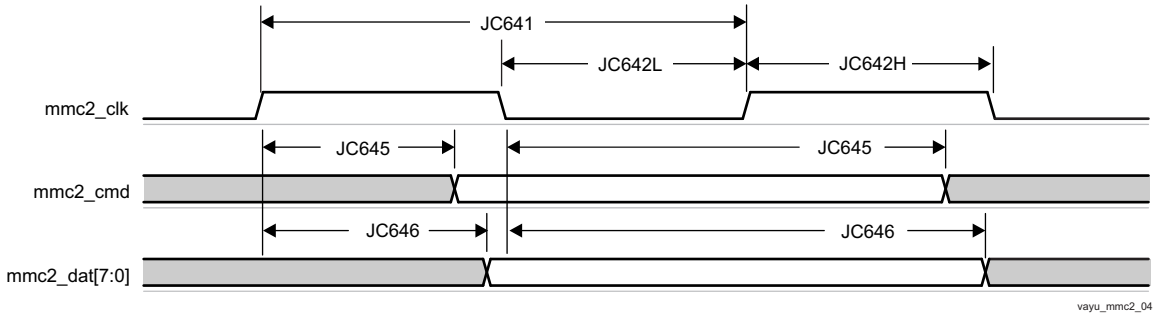

図 7-77. MMC/SD/SDIO in - High Speed JC64 - Transmitter Mode

7.23.2.3 High-speed HS200 JC64 SDR, 8-bit data, half cycle

表 7-109 presents Timing requirements and Switching characteristics for MMC2 - HS200 in receiver and transmitter mode (see 図 7-78).

表 7-109. Switching Characteristics for MMC2 - JEDS84 HS200 Mode

NO.	PARAMETER	DESCRIPTION	MIN	MAX	UNIT
HS2001	fop(clk)	Operating frequency, mmc2_clk		192	MHz
HS2002H	$t_{w(clkH)}$	Pulse duration, mmc2_clk high	0.5*P-0.172	(1)	ns
HS2002L	$t_{w(clkL)}$	Pulse duration, mmc2_clk low	0.5*P-0.172	(1)	ns
HS2005	$t_{d(clkL-cmdV)}$	Delay time, mmc2_clk falling clock edge to mmc2_cmd transition	-1.136	0.536	ns
HS2006	$t_{d(clkL-dV)}$	Delay time, mmc2_clk falling clock edge to mmc2_dat[7:0] transition	-1.136	0.536	ns

Copyright © 2015–2019, Texas Instruments Incorporated

(1) P = output mmc2_clk period in ns

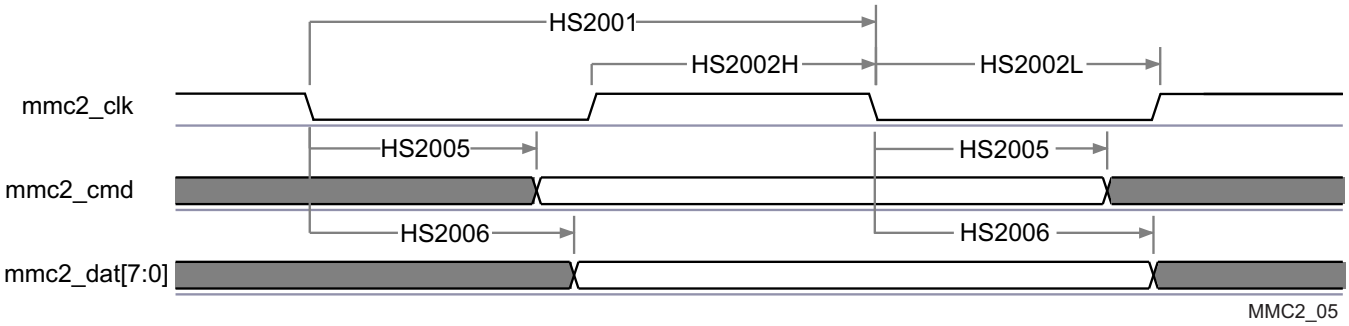

図 7-78. eMMC in - HS200 SDR - Transmitter Mode

7.23.2.4 High-speed JC64 DDR, 8-bit data

表 7-110 and 表 7-111 present Timing requirements and Switching characteristics for MMC2 - High speed DDR in receiver and transmitter mode (see 図 7-79 and 図 7-80).

表 7-110. Timing Requirements for MMC2 - JC64 High Speed DDR Mode

NO.	PARAMETER	DESCRIPTION	MODE	MIN	MAX	UNIT
DDR3	$t_{su(cmdV-clk)}$	Setup time, mmc2_cmd valid before mmc2_clk transition		1.8		ns
DDR4	$t_{h(clk-cmdV)}$	Hold time, mmc2_cmd valid after mmc2_clk transition		1.8		ns
DDR7	$t_{su(dV-clk)}$	Setup time, mmc2_dat[7:0] valid before mmc2_clk transition		1.8		ns
DDR8	$t_{h(clk-dV)}$	Hold time, mmc2_dat[7:0] valid after mmc2_clk transition	Pad Loopback (1.8V)	1.8 (1)		ns
			Pad Loopback (3.3V)	1.8		ns
			Internal Loopback	1.8 (1)		ns

(1) This Hold time requirement is larger than the Hold time provided by a typical eMMC component. Therefore, the trace length between the Device and eMMC component must be sufficiently long enough to ensure that the Hold time is met at the Device.

表 7-111. Switching Characteristics for MMC2 - JC64 High Speed DDR Mode

NO.	PARAMETER	DESCRIPTION	MIN	MAX	UNIT
DDR1	fop(clk)	Operating frequency, mmc2_clk		48	MHz
DDR2H	$t_{w(clkH)}$	Pulse duration, mmc2_clk high	0.5*P-0.172	(1)	ns
DDR2L	$t_{w(clkL)}$	Pulse duration, mmc2_clk low	0.5*P-0.172	(1)	ns
DDR5	$t_{d(clk-cmdV)}$	Delay time, mmc2_clk transition to mmc2_cmd transition	2.9	7.14	ns
DDR6	$t_{d(clk-dV)}$	Delay time, mmc2_clk transition to mmc2_dat[7:0] transition	2.9	7.14	ns

(1) P = output mmc2_clk period in ns

表 7-112 and 表 7-113 present Timing requirements and Switching characteristics for MMC2 - High speed DDR in receiver and transmitter mode During Boot (see 図 7-79 and 図 7-80).

表 7-112. Timing Requirements for MMC2 - JC64 High Speed DDR Mode During Boot

NO.	PARAMETER	DESCRIPTION	MODE	MIN	MAX	UNIT
DDR3	$t_{su(cmdV-clk)}$	Setup time, mmc2_cmd valid before mmc2_clk transition	Boot (1.8V)	1.8		ns
			Boot (3.3V)	1.8		ns
DDR4	$t_{h(clk-cmdV)}$	Hold time, mmc2_cmd valid after mmc2_clk transition	Boot (1.8V)	1.8 (1)		ns
			Boot (3.3V)	1.8 (1)		ns
DDR7	$t_{su(dV-clk)}$	Setup time, mmc2_dat[7:0] valid before mmc2_clk transition	Boot (1.8V)	1.8		ns
			Boot (3.3V)	1.8		ns
DDR8	$t_{h(clk-dV)}$	Hold time, mmc2_dat[7:0] valid after mmc2_clk transition	Boot (1.8V)	1.8 (1)		ns
			Boot (3.3V)	1.8 (1)		ns

(1) This Hold time requirement is larger than the Hold time provided by a typical eMMC component. Therefore, the trace length between the Device and eMMC component must be sufficiently long enough to ensure that the Hold time is met at the Device.

表 7-113. Switching Characteristics for MMC2 - JC64 High Speed DDR Mode During Boot

NO.	PARAMETER	DESCRIPTION	MODE	MIN	MAX	UNIT
DDR1	fop(clk)	Operating frequency, mmc2_clk			48	MHz
DDR2H	$t_{w(clkH)}$	Pulse duration, mmc2_clk high		0.5*P-0.172 (1)		ns
DDR2L	$t_{w(clkL)}$	Pulse duration, mmc2_clk low		0.5*P-0.172 (1)		ns
DDR5	$t_{d(clk-cmdV)}$	Delay time, mmc2_clk transition to mmc2_cmd transition	Boot (1.8V)	2.9	7.14	ns
			Boot (3.3V)	2.9	7.14	ns
DDR6	$t_{d(clk-dV)}$	Delay time, mmc2_clk transition to mmc2_dat[7:0] transition	Boot (1.8V)	2.9	7.14	ns
			Boot (3.3V)	2.9	7.14	ns

(1) P = output mmc2_clk period in ns

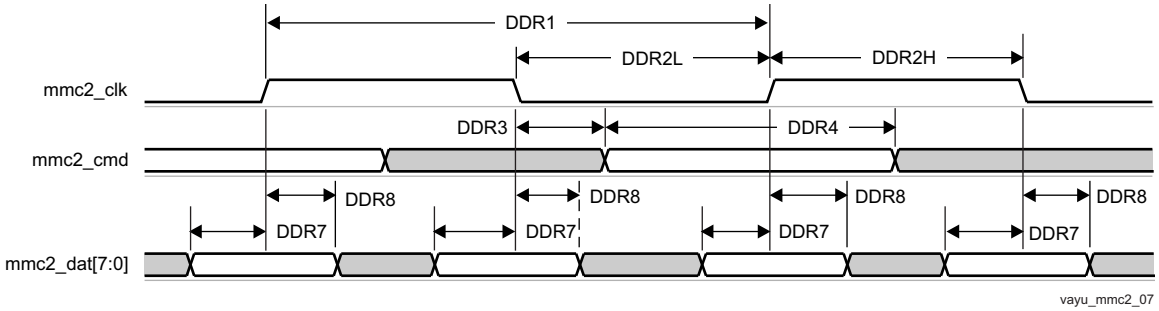

図 7-79. MMC/SD/SDIO in - High Speed DDR JC64 - Receiver Mode

Copyright © 2015–2019, Texas Instruments Incorporated

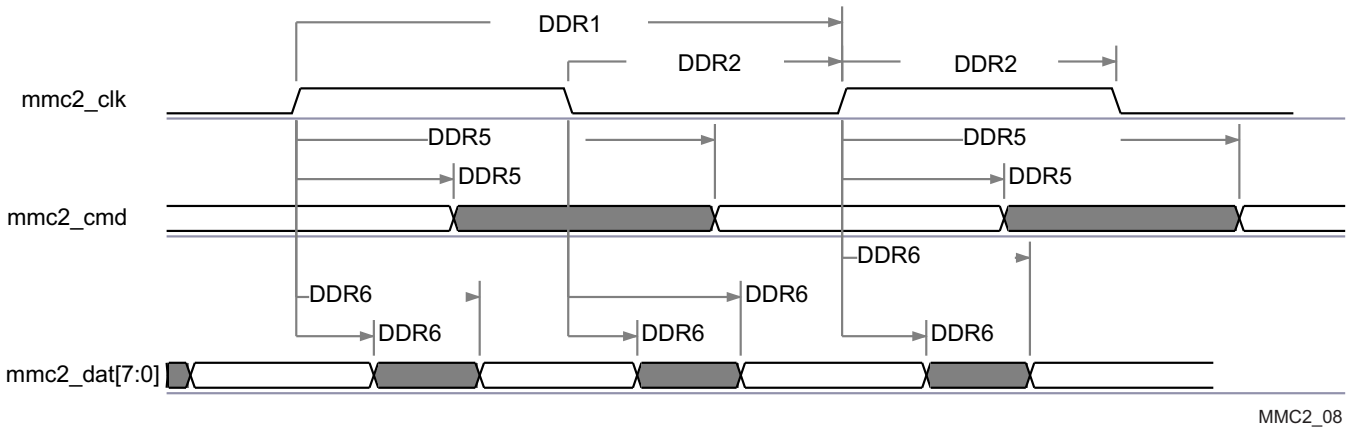

図 7-80. MMC/SD/SDIO in - High Speed DDR JC64 - Transmitter Mode

注: To configure the desired Manual IO Timing Mode the user must follow the steps described in section Manual IO Timing Modes of the Device TRM.

The associated registers to configure are listed in the **CFG REGISTER** column. For more information see the Control Module chapter in the Device TRM.

Manual IO Timings Modes must be used to ensure some IO timings for MMC2. See 表 7-2 *Modes Summary* for a list of IO timings requiring the use of Manual IO Timings Modes. See 表 7-114 *Manual Functions Mapping for MMC2 With Internal Loopback Clock and for HS200* for a definition of the Manual modes.

表 7-114 lists the A_DELAY and G_DELAY values needed to calculate the correct values to be set in the CFG_x registers.

表 7-114. Manual Functions Mapping for MMC2 With Internal Loopback Clock and for HS200

BALL	BALL NAME	MMC2_DDR_LB_MANUAL1		MMC2_STD_HS_LB_MANUAL1		MMC2_HS200_MANUAL1		CFG REGISTER	MUXMODE
		A_DELAY (ps)	G_DELAY (ps)	A_DELAY (ps)	G_DELAY (ps)	A_DELAY (ps)	G_DELAY (ps)		1
K7	gpmc_a19	49	0	850	0	-	-	CFG_GPMC_A19_IN	mmc2_dat4
K7	gpmc_a19	0	0	0	0	274	0	CFG_GPMC_A19_OEN	mmc2_dat4
K7	gpmc_a19	170	0	0	0	162	0	CFG_GPMC_A19_OUT	mmc2_dat4
M7	gpmc_a20	463	0	1264	0	-	-	CFG_GPMC_A20_IN	mmc2_dat5
M7	gpmc_a20	0	0	0	0	401	0	CFG_GPMC_A20_OEN	mmc2_dat5
M7	gpmc_a20	81	0	0	0	73	0	CFG_GPMC_A20_OUT	mmc2_dat5
J5	gpmc_a21	8	0	786	0	-	-	CFG_GPMC_A21_IN	mmc2_dat6
J5	gpmc_a21	0	0	0	0	465	0	CFG_GPMC_A21_OEN	mmc2_dat6
J5	gpmc_a21	123	0	0	0	115	0	CFG_GPMC_A21_OUT	mmc2_dat6
K6	gpmc_a22	0	102	902	0	-	-	CFG_GPMC_A22_IN	mmc2_dat7
K6	gpmc_a22	0	0	0	0	633	0	CFG_GPMC_A22_OEN	mmc2_dat7
K6	gpmc_a22	55	0	0	0	47	0	CFG_GPMC_A22_OUT	mmc2_dat7
J7	gpmc_a23	592	2815	0	2764	-	-	CFG_GPMC_A23_IN	mmc2_clk
J7	gpmc_a23	422	0	0	0	935	280	CFG_GPMC_A23_OUT	mmc2_clk
J4	gpmc_a24	384	0	1185	0	-	-	CFG_GPMC_A24_IN	mmc2_dat0
J4	gpmc_a24	0	0	0	0	621	0	CFG_GPMC_A24_OEN	mmc2_dat0
J4	gpmc_a24	0	0	0	0	0	0	CFG_GPMC_A24_OUT	mmc2_dat0
J6	gpmc_a25	0	0	670	0	-	-	CFG_GPMC_A25_IN	mmc2_dat1
J6	gpmc_a25	0	0	0	0	183	0	CFG_GPMC_A25_OEN	mmc2_dat1
J6	gpmc_a25	0	0	0	0	0	0	CFG_GPMC_A25_OUT	mmc2_dat1
H4	gpmc_a26	171	0	972	0	-	-	CFG_GPMC_A26_IN	mmc2_dat2
H4	gpmc_a26	0	0	0	0	467	0	CFG_GPMC_A26_OEN	mmc2_dat2
H4	gpmc_a26	0	0	0	0	0	0	CFG_GPMC_A26_OUT	mmc2_dat2
H5	gpmc_a27	315	0	1116	0	-	-	CFG_GPMC_A27_IN	mmc2_dat3
H5	gpmc_a27	0	0	0	0	262	0	CFG_GPMC_A27_OEN	mmc2_dat3
H5	gpmc_a27	54	0	0	0	46	0	CFG_GPMC_A27_OUT	mmc2_dat3
H6	gpmc_cs1	0	0	250	0	-	-	CFG_GPMC_CS1_IN	mmc2_cmd
H6	gpmc_cs1	0	0	0	0	684	0	CFG_GPMC_CS1_OEN	mmc2_cmd
H6	gpmc_cs1	0	0	0	0	76	0	CFG_GPMC_CS1_OUT	mmc2_cmd

Copyright © 2015–2019, Texas Instruments Incorporated

7.23.3 MMC3 and MMC4—SDIO/SD

MMC3 and MMC4 interfaces are compliant with the SDIO3.0 standard v1.0, SD Part E1 and for generic SDIO devices, it supports the following applications:

- MMC3 8-bit data and MMC4 4-bit data, SD Default speed, SDR
- MMC3 8-bit data and MMC4 4-bit data, SD High speed, SDR
- MMC3 8-bit data and MMC4 4-bit data, UHS-1 SDR12 (SD Standard v3.01), 4-bit data, SDR, half cycle
- MMC3 8-bit data and MMC4 4-bit data, UHS-I SDR25 (SD Standard v3.01), 4-bit data, SDR, half cycle
- MMC3 8-bit data, UHS-I SDR50

注: The eMMC/SD/SDIOj (j = 3 to 4) controller is also referred to as MMCj.

注: For more information, see the MMC/SDIO chapter of the Device TRM.

7.23.3.1 MMC3 and MMC4, SD Default Speed

図 7-81, 図 7-82, and 表 7-115 through 表 7-118 present Timing requirements and Switching characteristics for MMC3 and MMC4 - SD Default speed in receiver and transmitter mode.

表 7-115. Timing Requirements for MMC3 - Default Speed Mode (1)

NO.	PARAMETER	DESCRIPTION	MIN	MAX	UNIT
DS5	$t_{su(cmdV-clkH)}$	Setup time, mmc3_cmd valid before mmc3_clk rising clock edge	5.11		ns
DS6	$t_{h(clkH-cmdV)}$	Hold time, mmc3_cmd valid after mmc3_clk rising clock edge	20.46		ns
DS7	$t_{su(dV-clkH)}$	Setup time, mmc3_dat[i:0] valid before mmc3_clk rising clock edge	5.11		ns
DS8	$t_{h(clkH-dV)}$	Hold time, mmc3_dat[i:0] valid after mmc3_clk rising clock edge	20.46		ns

(1) i in [i:0] = 7

表 7-116. Switching Characteristics for MMC3 - SD/SDIO Default Speed Mode (2)

NO.	PARAMETER	DESCRIPTION	MIN	MAX	UNIT
DS0	fop(clk)	Operating frequency, mmc3_clk		24	MHz
DS1	$t_{w(clkH)}$	Pulse duration, mmc3_clk high	0.5*P-0.270	(1)	ns
DS2	$t_{w(clkL)}$	Pulse duration, mmc3_clk low	0.5*P-0.270	(1)	ns
DS3	$t_{d(clkL-cmdV)}$	Delay time, mmc3_clk falling clock edge to mmc3_cmd transition	-14.93	14.93	ns
DS4	$t_{d(clkL-dV)}$	Delay time, mmc3_clk falling clock edge to mmc3_dat[i:0] transition	-14.93	14.93	ns

(1) P = output mmc3_clk period in ns

(2) i in [i:0] = 7

表 7-117. Timing Requirements for MMC4 - Default Speed Mode (1)

NO.	PARAMETER	DESCRIPTION	MIN	MAX	UNIT
DS5	$t_{su(cmdV-clkH)}$	Setup time, mmc4_cmd valid before mmc4_clk rising clock edge	5.11		ns
DS6	$t_{h(clkH-cmdV)}$	Hold time, mmc4_cmd valid after mmc4_clk rising clock edge	20.46		ns
DS7	$t_{su(dV-clkH)}$	Setup time, mmc4_dat[i:0] valid before mmc4_clk rising clock edge	5.11		ns
DS8	$t_{h(clkH-dV)}$	Hold time, mmc4_dat[i:0] valid after mmc4_clk rising clock edge	20.46		ns

Copyright © 2015–2019, Texas Instruments Incorporated

(1) i in [i:0] = 3

表 7-118. Switching Characteristics for MMC4 - Default Speed Mode (2)

NO.	PARAMETER	DESCRIPTION	MIN	MAX	UNIT
DS0	fop(clk)	Operating frequency, mmc4_clk		24	MHz
DS1	$t_{w(clkH)}$	Pulse duration, mmc4_clk high	0.5*P-0.270	(1)	ns
DS2	$t_{w(clkL)}$	Pulse duration, mmc4_clk low	0.5*P-0.270	(1)	ns
DS3	$t_{d(clkL-cmdV)}$	Delay time, mmc4_clk falling clock edge to mmc4_cmd transition	-14.93	14.93	ns
DS4	$t_{d(clkL-dV)}$	Delay time, mmc4_clk falling clock edge to mmc4_dat[i:0] transition	-14.93	14.93	ns

(1) P = output mmc4_clk period in ns
(2) i in [i:0] = 3

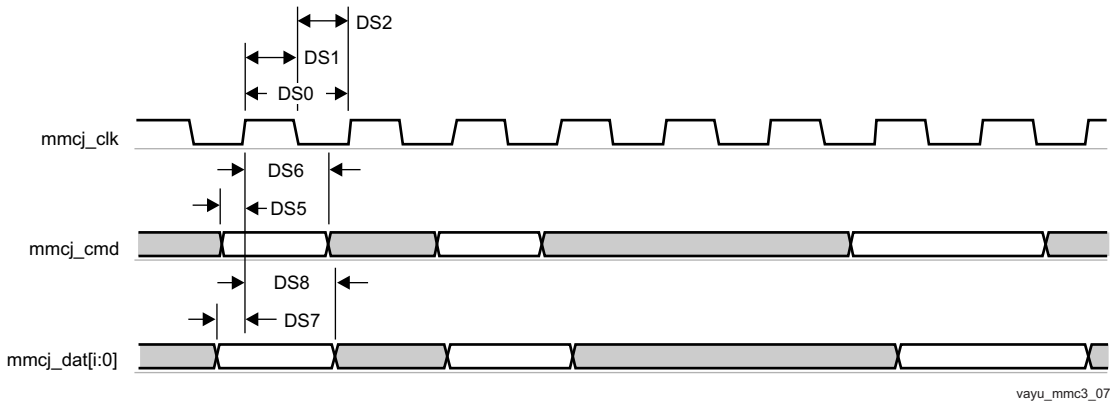

図 7-81. MMC/SD/SDIOj in - Default Speed - Receiver Mode

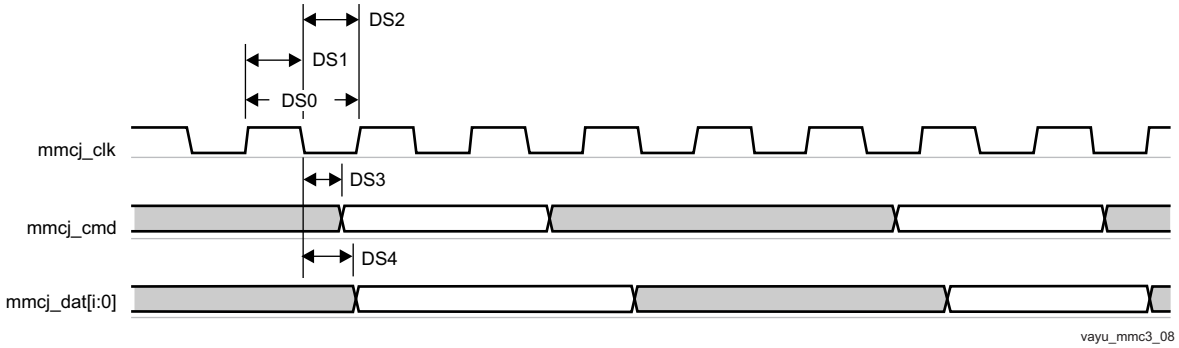

図 7-82. MMC/SD/SDIOj in - Default Speed - Transmitter Mode

7.23.3.2 MMC3 and MMC4, SD High Speed

図 7-83, 図 7-84, and 表 7-119 through 表 7-122 present Timing requirements and Switching characteristics for MMC3 and MMC4 - SD and SDIO High speed in receiver and transmitter mode.

表 7-119. Timing Requirements for MMC3 - SD/SDIO High Speed Mode (1)

NO.	PARAMETER	DESCRIPTION	MIN	MAX	UNIT
HS3	$t_{su(cmdV-clkH)}$	Setup time, mmc3_cmd valid before mmc3_clk rising clock edge	5.3		ns
HS4	$t_{h(clkH-cmdV)}$	Hold time, mmc3_cmd valid after mmc3_clk rising clock edge	2.6		ns
HS7	$t_{su(dV-clkH)}$	Setup time, mmc3_dat[i:0] valid before mmc3_clk rising clock edge	5.3		ns
HS8	$t_{h(clkH-dV)}$	Hold time, mmc3_dat[i:0] valid after mmc3_clk rising clock edge	2.6		ns

(1) i in [i:0] = 7

表 7-120. Switching Characteristics for MMC3 - SD/SDIO High Speed Mode (2)

NO.	PARAMETER	DESCRIPTION	MIN	MAX	UNIT
HS1	fop(clk)	Operating frequency, mmc3_clk		48	MHz
HS2H	$t_{w(clkH)}$	Pulse duration, mmc3_clk high	0.5*P-0.270	(1)	ns
HS2L	$t_{w(clkL)}$	Pulse duration, mmc3_clk low	0.5*P-0.270	(1)	ns
HS5	$t_{d(clkL-cmdV)}$	Delay time, mmc3_clk falling clock edge to mmc3_cmd transition	-7.6	3.6	ns
HS6	$t_{d(clkL-dV)}$	Delay time, mmc3_clk falling clock edge to mmc3_dat[i:0] transition	-7.6	3.6	ns

(1) P = output mmc3_clk period in ns
(2) i in [i:0] = 7

表 7-121. Timing Requirements for MMC4 - High Speed Mode (1)

NO.	PARAMETER	DESCRIPTION	MIN	MAX	UNIT
HS3	$t_{su(cmdV-clkH)}$	Setup time, mmc4_cmd valid before mmc4_clk rising clock edge	5.3		ns
HS4	$t_{h(clkH-cmdV)}$	Hold time, mmc4_cmd valid after mmc4_clk rising clock edge	1.6		ns
HS7	$t_{su(dV-clkH)}$	Setup time, mmc4_dat[i:0] valid before mmc4_clk rising clock edge	5.3		ns
HS8	$t_{h(clkH-dV)}$	Hold time, mmc4_dat[i:0] valid after mmc4_clk rising clock edge	1.6		ns

(1) i in [i:0] = 3

表 7-122. Switching Characteristics for MMC4 - High Speed Mode (2)

NO.	PARAMETER	DESCRIPTION	MIN	MAX	UNIT
HS1	fop(clk)	Operating frequency, mmc4_clk		48	MHz
HS2H	$t_{w(clkH)}$	Pulse duration, mmc4_clk high	0.5*P-0.270	(1)	ns
HS2L	$t_{w(clkL)}$	Pulse duration, mmc4_clk low	0.5*P-0.270	(1)	ns
HS5	$t_{d(clkL-cmdV)}$	Delay time, mmc4_clk falling clock edge to mmc4_cmd transition	-8.8	6.6	ns
HS6	$t_{d(clkL-dV)}$	Delay time, mmc4_clk falling clock edge to mmc4_dat[i:0] transition	-8.8	6.6	ns

(1) P = output mmc4_clk period in ns
(2) i in [i:0] = 3

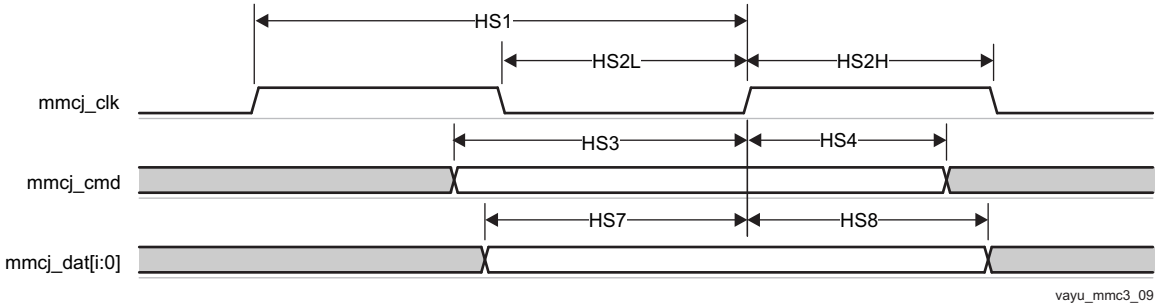

図 7-83. MMC/SD/SDIOj in - High Speed - Receiver Mode

Copyright © 2015–2019, Texas Instruments Incorporated

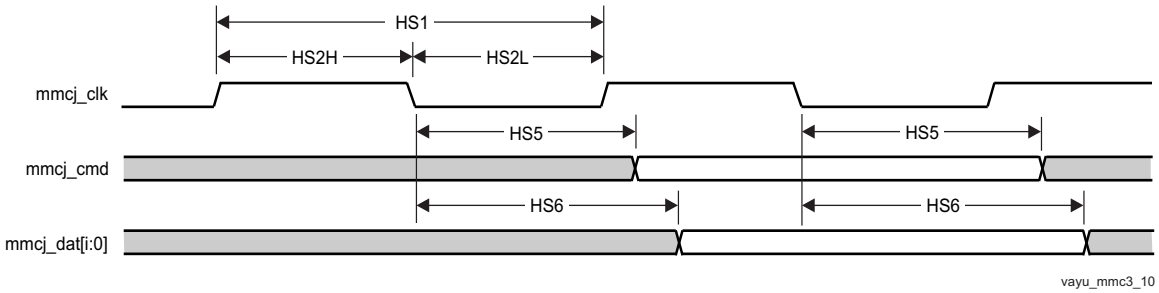

図 7-84. MMC/SD/SDIOj in - High Speed - Transmitter Mode

7.23.3.3 MMC3 and MMC4, SD and SDIO SDR12 Mode

図 7-85, 図 7-86, and 表 7-123, through 表 7-126 present Timing requirements and Switching characteristics for MMC3 and MMC4 - SD and SDIO SDR12 in receiver and transmitter mode.

表 7-123. Timing Requirements for MMC3 - SDR12 Mode (1)

NO.	PARAMETER	DESCRIPTION	MIN	MAX	UNIT
SDR125	$t_{su(cmdV-clkH)}$	Setup time, mmc3_cmd valid before mmc3_clk rising clock edge	25.99		ns
SDR126	$t_{h(clkH-cmdV)}$	Hold time, mmc3_cmd valid after mmc3_clk rising clock edge	1.6		ns
SDR127	$t_{su(dV-clkH)}$	Setup time, mmc3_dat[i:0] valid before mmc3_clk rising clock edge	25.99		ns
SDR128	$t_{h(clkH-dV)}$	Hold time, mmc3_dat[i:0] valid after mmc3_clk rising clock edge	1.6		ns

(1) i in [i:0] = 7

表 7-124. Switching Characteristics for MMC3 - SDR12 Mode (2)

NO.	PARAMETER	DESCRIPTION	MIN	MAX	UNIT
SDR120	fop(clk)	Operating frequency, mmc3_clk		24	MHz
SDR121	$t_{w(clkH)}$	Pulse duration, mmc3_clk high	0.5*P-0.270	(1)	ns
SDR122	$t_{w(clkL)}$	Pulse duration, mmc3_clk low	0.5*P-0.270	(1)	ns
SDR123	$t_{d(clkL-cmdV)}$	Delay time, mmc3_clk falling clock edge to mmc3_cmd transition	-19.13	16.93	ns
SDR124	$t_{d(clkL-dV)}$	Delay time, mmc3_clk falling clock edge to mmc3_dat[i:0] transition	-19.13	16.93	ns

(1) P = output mmc3_clk period in ns

(2) i in [i:0] = 7

表 7-125. Timing Requirements for MMC4 - SDR12 Mode (1)

NO.	PARAMETER	DESCRIPTION	MIN	MAX	UNIT
SDR125	$t_{su(cmdV-clkH)}$	Setup time, mmc4_cmd valid before mmc4_clk rising clock edge	25.99		ns
SDR126	$t_{h(clkH-cmdV)}$	Hold time, mmc4_cmd valid after mmc4_clk rising clock edge	1.6		ns
SDR127	$t_{su(dV-clkH)}$	Setup time, mmc4_dat[i:0] valid before mmc4_clk rising clock edge	25.99		ns
SDR128	$t_{h(clkH-dV)}$	Hold time, mmc4_dat[i:0] valid after mmc4_clk rising clock edge	1.6		ns

(1) j in [i:0] = 3

表 7-126. Switching Characteristics for MMC4 - SDR12 Mode (2)

NO.	PARAMETER	DESCRIPTION	MIN	MAX	UNIT
SDR120	fop(clk)	Operating frequency, mmc4_clk		24	MHz
SDR121	$t_{w(clkH)}$	Pulse duration, mmc4_clk high	0.5*P-0.270	(1)	ns
SDR122	$t_{w(clkL)}$	Pulse duration, mmc4_clk low	0.5*P-0.270	(1)	ns
SDR125	$t_{d(clkL-cmdV)}$	Delay time, mmc4_clk falling clock edge to mmc4_cmd transition	-19.13	16.93	ns

表 7-126. Switching Characteristics for MMC4 - SDR12 Mode [2] (continued)

NO.	PARAMETER	DESCRIPTION	MIN	MAX	UNIT
SDR126	$t_{d(clkL-dV)}$	Delay time, mmc4_clk falling clock edge to mmc4_dat[i:0] transition	-19.13	16.93	ns

(1) P = output mmc4_clk period in ns
(2) j in [i:0] = 3

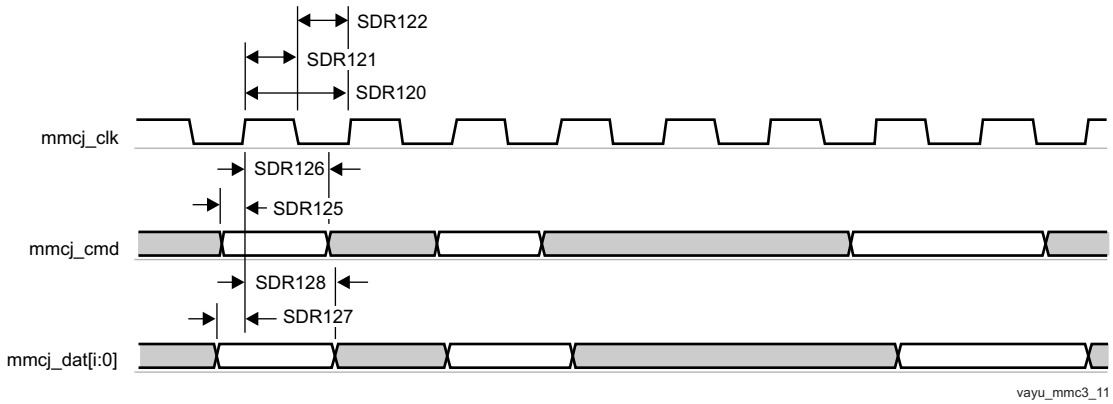

図 7-85. MMC/SD/SDIOj in - SDR12 - Receiver Mode

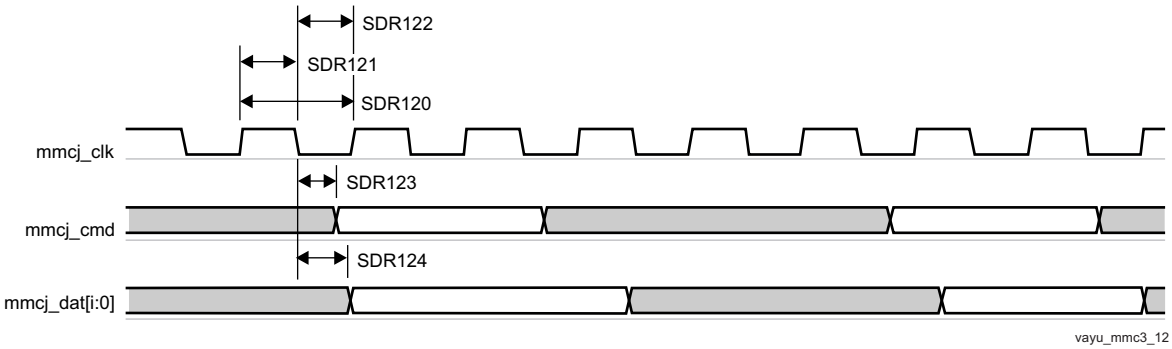

図 7-86. MMC/SD/SDIOj in - SDR12 - Transmitter Mode

7.23.3.4 MMC3 and MMC4, SD SDR25 Mode

図 7-87, 図 7-88, and 表 7-127 through 表 7-130 present Timing requirements and Switching characteristics for MMC3 and MMC4 - SD and SDIO SDR25 in receiver and transmitter mode.

表 7-127. Timing Requirements for MMC3 - SDR25 Mode [1]

NO.	PARAMETER	DESCRIPTION	MIN	MAX	UNIT
SDR253	$t_{su(cmdV-clkH)}$	Setup time, mmc3_cmd valid before mmc3_clk rising clock edge	5.3		ns
SDR254	$t_{h(clkH-cmdV)}$	Hold time, mmc3_cmd valid after mmc3_clk rising clock edge	1.6		ns
SDR257	$t_{su(dV-clkH)}$	Setup time, mmc3_dat[i:0] valid before mmc3_clk rising clock edge	5.3		ns
SDR258	$t_{h(clkH-dV)}$	Hold time, mmc3_dat[i:0] valid after mmc3_clk rising clock edge	1.6		ns

(1) i in [i:0] = 7

表 7-128. Switching Characteristics for MMC3 - SDR25 Mode [2]

NO.	PARAMETER	DESCRIPTION	MIN	MAX	UNIT
SDR251	fop(clk)	Operating frequency, mmc3_clk		48	MHz
SDR252 H	$t_{w(clkH)}$	Pulse duration, mmc3_clk high	0.5*P-0.270	[1]	ns

Copyright © 2015–2019, Texas Instruments Incorporated

表 7-128. Switching Characteristics for MMC3 - SDR25 Mode [2] (continued)

NO.	PARAMETER	DESCRIPTION	MIN	MAX	UNIT
SDR252L	$t_{w(clkL)}$	Pulse duration, mmc3_clk low	0.5*P-0.270	[1]	ns
SDR255	$t_{d(clkL-cmdV)}$	Delay time, mmc3_clk falling clock edge to mmc3_cmd transition	-8.8	6.6	ns
SDR256	$t_{d(clkL-dV)}$	Delay time, mmc3_clk falling clock edge to mmc3_dat[i:0] transition	-8.8	6.6	ns

(1) P = output mmc3_clk period in ns
(2) i in [i:0] = 7

表 7-129. Timing Requirements for MMC4 - SDR25 Mode [1]

NO.	PARAMETER	DESCRIPTION	MIN	MAX	UNIT
SDR255	$t_{su(cmdV-clkH)}$	Setup time, mmc4_cmd valid before mmc4_clk rising clock edge	5.3		ns
SDR256	$t_{h(clkH-cmdV)}$	Hold time, mmc4_cmd valid after mmc4_clk rising clock edge	1.6		ns
SDR257	$t_{su(dV-clkH)}$	Setup time, mmc4_dat[i:0] valid before mmc4_clk rising clock edge	5.3		ns
SDR258	$t_{h(clkH-dV)}$	Hold time, mmc4_dat[i:0] valid after mmc4_clk rising clock edge	1.6		ns

(1) i in [i:0] = 3

表 7-130. Switching Characteristics for MMC4 - SDR25 Mode [2]

NO.	PARAMETER	DESCRIPTION	MIN	MAX	UNIT
SDR251	fop(clk)	Operating frequency, mmc4_clk		48	MHz
SDR252H	$t_{w(clkH)}$	Pulse duration, mmc4_clk high	0.5*P-0.270	[1]	ns
SDR252L	$t_{w(clkL)}$	Pulse duration, mmc4_clk low	0.5*P-0.270	[1]	ns
SDR255	$t_{d(clkL-cmdV)}$	Delay time, mmc4_clk falling clock edge to mmc4_cmd transition	-8.8	6.6	ns
SDR256	$t_{d(clkL-dV)}$	Delay time, mmc4_clk falling clock edge to mmc4_dat[i:0] transition	-8.8	6.6	ns

(1) P = output mmc4_clk period in ns
(2) i in [i:0] = 3

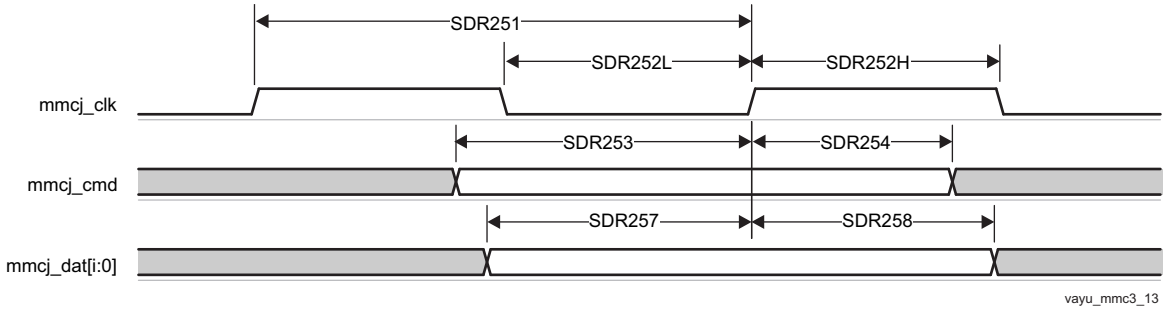

図 7-87. MMC/SD/SDIOj in - SDR25 - Receiver Mode

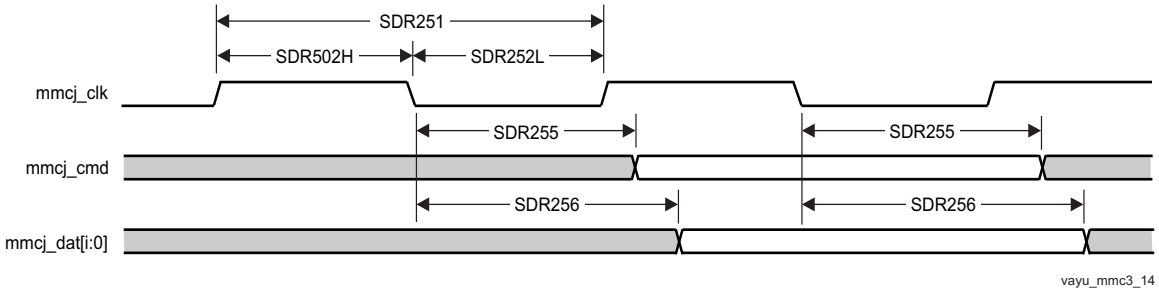

図 7-88. MMC/SD/SDIOj in - SDR25 - Transmitter Mode

7.23.3.5 MMC3 SDIO High-Speed UHS-I SDR50 Mode, Half Cycle

図 7-89, 図 7-90, 表 7-131, and 表 7-132 present Timing requirements and Switching characteristics for MMC3 - SDIO High speed SDR50 in receiver and transmitter mode.

表 7-131. Timing Requirements for MMC3 - SDR50 Mode (1)

NO.	PARAMETER	DESCRIPTION	MIN	MAX	UNIT
SDR503	$t_{su(cmdV-clkH)}$	Setup time, mmc3_cmd valid before mmc3_clk rising clock edge	1.48		ns
SDR504	$t_{h(clkH-cmdV)}$	Hold time, mmc3_cmd valid after mmc3_clk rising clock edge	1.6		ns
SDR507	$t_{su(dV-clkH)}$	Setup time, mmc3_dat[i:0] valid before mmc3_clk rising clock edge	1.48		ns
SDR508	$t_{h(clkH-dV)}$	Hold time, mmc3_dat[i:0] valid after mmc3_clk rising clock edge	1.6		ns

(1) i in [i:0] = 7

表 7-132. Switching Characteristics for MMC3 - SDR50 Mode (2)

NO.	PARAMETER	DESCRIPTION	MIN	MAX	UNIT
SDR501	fop(clk)	Operating frequency, mmc3_clk		64	MHz
SDR502H	$t_{w(clkH)}$	Pulse duration, mmc3_clk high	0.5*P-0.270	(1)	ns
SDR502L	$t_{w(clkL)}$	Pulse duration, mmc3_clk low	0.5*P-0.270	(1)	ns
SDR505	$t_{d(clkL-cmdV)}$	Delay time, mmc3_clk falling clock edge to mmc3_cmd transition	-3.66	1.46	ns
SDR506	$t_{d(clkL-dV)}$	Delay time, mmc3_clk falling clock edge to mmc3_dat[i:0] transition	-3.66	1.46	ns

(1) P = output mmc3_clk period in ns

(2) i in [i:0] = 7

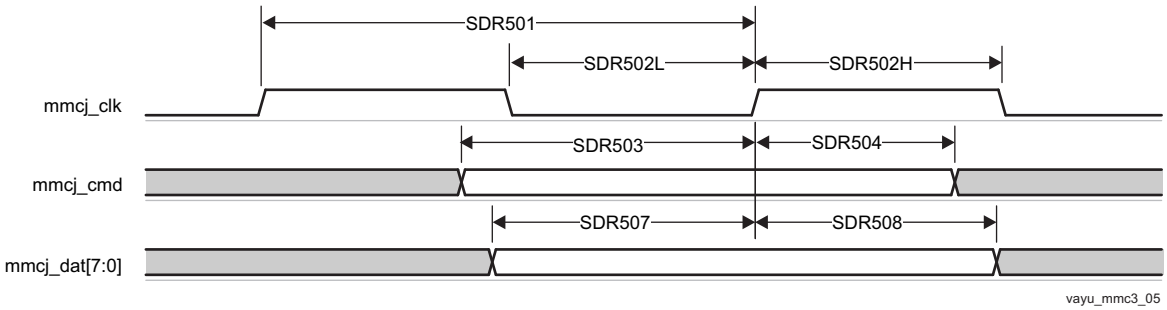

図 7-89. MMC/SD/SDIOj in - High Speed SDR50 - Receiver Mode

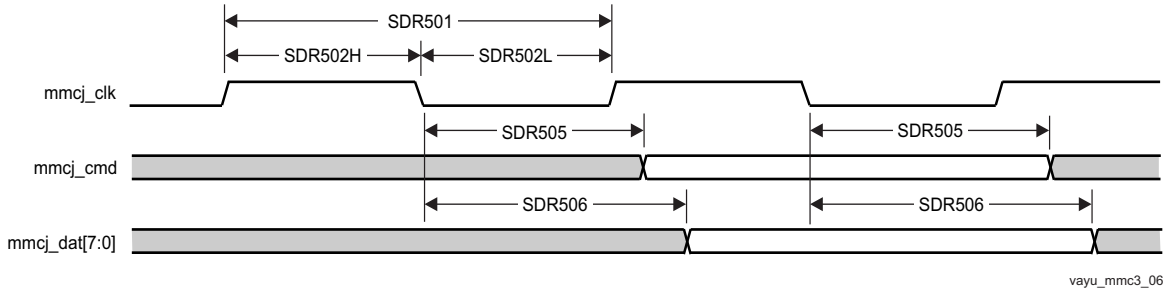

図 7-90. MMC/SD/SDIOj in - High Speed SDR50 - Transmitter Mode

注: To configure the desired Manual IO Timing Mode the user must follow the steps described in section Manual IO Timing Modes of the Device TRM.

The associated registers to configure are listed in the **CFG REGISTER** column. For more information see the Control Module chapter in the Device TRM.

Copyright © 2015–2019, Texas Instruments Incorporated

Manual IO Timings Modes must be used to ensure some IO timings for MMC3. See 表 7-2 *Modes Summary* for a list of IO timings requiring the use of Manual IO Timings Modes. See 表 7-133 *Manual Functions Mapping for MMC3* for a definition of the Manual modes.

表 7-133 lists the A_DELAY and G_DELAY values needed to calculate the correct values to be set in the CFG_x registers.

表 7-133. Manual Functions Mapping for MMC3

BALL	BALL NAME	MMC3_MANUAL1		CFG REGISTER	MUXMODE
		A_DELAY (ps)	G_DELAY (ps)		0
AD4	mmc3_clk	0	386	CFG_MMC3_CLK_IN	mmc3_clk
AD4	mmc3_clk	605	0	CFG_MMC3_CLK_OUT	mmc3_clk
AC4	mmc3_cmd	0	0	CFG_MMC3_CMD_IN	mmc3_cmd
AC4	mmc3_cmd	0	0	CFG_MMC3_CMD_OEN	mmc3_cmd
AC4	mmc3_cmd	0	0	CFG_MMC3_CMD_OUT	mmc3_cmd
AC7	mmc3_dat0	171	0	CFG_MMC3_DAT0_IN	mmc3_dat0
AC7	mmc3_dat0	0	0	CFG_MMC3_DAT0_OEN	mmc3_dat0
AC7	mmc3_dat0	0	0	CFG_MMC3_DAT0_OUT	mmc3_dat0
AC6	mmc3_dat1	221	0	CFG_MMC3_DAT1_IN	mmc3_dat1
AC6	mmc3_dat1	0	0	CFG_MMC3_DAT1_OEN	mmc3_dat1
AC6	mmc3_dat1	0	0	CFG_MMC3_DAT1_OUT	mmc3_dat1
AC9	mmc3_dat2	0	0	CFG_MMC3_DAT2_IN	mmc3_dat2
AC9	mmc3_dat2	0	0	CFG_MMC3_DAT2_OEN	mmc3_dat2
AC9	mmc3_dat2	0	0	CFG_MMC3_DAT2_OUT	mmc3_dat2
AC3	mmc3_dat3	474	0	CFG_MMC3_DAT3_IN	mmc3_dat3
AC3	mmc3_dat3	0	0	CFG_MMC3_DAT3_OEN	mmc3_dat3
AC3	mmc3_dat3	0	0	CFG_MMC3_DAT3_OUT	mmc3_dat3
AC8	mmc3_dat4	792	0	CFG_MMC3_DAT4_IN	mmc3_dat4
AC8	mmc3_dat4	0	0	CFG_MMC3_DAT4_OEN	mmc3_dat4
AC8	mmc3_dat4	0	0	CFG_MMC3_DAT4_OUT	mmc3_dat4
AD6	mmc3_dat5	782	0	CFG_MMC3_DAT5_IN	mmc3_dat5
AD6	mmc3_dat5	0	0	CFG_MMC3_DAT5_OEN	mmc3_dat5
AD6	mmc3_dat5	0	0	CFG_MMC3_DAT5_OUT	mmc3_dat5
AB8	mmc3_dat6	942	0	CFG_MMC3_DAT6_IN	mmc3_dat6
AB8	mmc3_dat6	0	0	CFG_MMC3_DAT6_OEN	mmc3_dat6
AB8	mmc3_dat6	0	0	CFG_MMC3_DAT6_OUT	mmc3_dat6
AB5	mmc3_dat7	636	0	CFG_MMC3_DAT7_IN	mmc3_dat7
AB5	mmc3_dat7	0	0	CFG_MMC3_DAT7_OEN	mmc3_dat7
AB5	mmc3_dat7	0	0	CFG_MMC3_DAT7_OUT	mmc3_dat7

Manual IO Timings Modes must be used to ensure some IO timings for MMC4. See 表 7-2 *Modes Summary* for a list of IO timings requiring the use of Manual IO Timings Modes. See 表 7-134 *Manual Functions Mapping for MMC4* for a definition of the Manual modes.

表 7-134 lists the A_DELAY and G_DELAY values needed to calculate the correct values to be set in the CFG_x registers.

表 7-134. Manual Functions Mapping for MMC4

BALL	BALL NAME	MMC4_MANUAL1		MMC4_DS_MANUAL1		CFG REGISTER	MUXMODE
		A_DELAY (ps)	G_DELAY (ps)	A_DELAY (ps)	G_DELAY (ps)		3
E25	uart1_ctsn	0	0	0	0	CFG_UART1_CTSN_IN	mmc4_clk

表 7-134. Manual Functions Mapping for MMC4 (continued)

BALL	BALL NAME	MMC4_MANUAL1		MMC4_DS_MANUAL1		CFG REGISTER	MUXMODE
		A_DELAY (ps)	G_DELAY (ps)	A_DELAY (ps)	G_DELAY (ps)		3
E25	uart1_ctsn	1147	0	0	0	CFG_UART1_CTSN_OUT	mmc4_clk
C27	uart1_rtsn	1834	0	307	0	CFG_UART1_RTSN_IN	mmc4_cmd
C27	uart1_rtsn	0	0	0	0	CFG_UART1_RTSN_OEN	mmc4_cmd
C27	uart1_rtsn	0	0	0	0	CFG_UART1_RTSN_OUT	mmc4_cmd
D27	uart2_ctsn	2165	0	785	0	CFG_UART2_CTSN_IN	mmc4_dat2
D27	uart2_ctsn	0	0	0	0	CFG_UART2_CTSN_OEN	mmc4_dat2
D27	uart2_ctsn	0	0	0	0	CFG_UART2_CTSN_OUT	mmc4_dat2
C28	uart2_rtsn	1929	64	613	0	CFG_UART2_RTSN_IN	mmc4_dat3
C28	uart2_rtsn	0	0	0	0	CFG_UART2_RTSN_OEN	mmc4_dat3
C28	uart2_rtsn	0	0	0	0	CFG_UART2_RTSN_OUT	mmc4_dat3
D28	uart2_rxd	1935	128	683	0	CFG_UART2_RXD_IN	mmc4_dat0
D28	uart2_rxd	0	0	0	0	CFG_UART2_RXD_OEN	mmc4_dat0
D28	uart2_rxd	0	0	0	0	CFG_UART2_RXD_OUT	mmc4_dat0
D26	uart2_txd	2172	44	835	0	CFG_UART2_TXD_IN	mmc4_dat1
D26	uart2_txd	0	0	0	0	CFG_UART2_TXD_OEN	mmc4_dat1
D26	uart2_txd	0	0	0	0	CFG_UART2_TXD_OUT	mmc4_dat1

7.24 General-Purpose Interface (GPIO)

The general-purpose interface combines eight general-purpose input/output (GPIO) banks. Each GPIO module provides 32 dedicated general-purpose pins with input and output capabilities; thus, the general-purpose interface supports up to 247 pins.

These pins can be configured for the following applications:

- Data input (capture)/output (drive)
- Keyboard interface with a debounce cell
- Interrupt generation in active mode upon the detection of external events. Detected events are processed by two parallel independent interrupt-generation submodules to support biprocessor operations
- Wake-up request generation in idle mode upon the detection of external events

注: For more information, see the General-Purpose Interface chapter of the Device TRM.

注: The general-purpose input/output i (i = 1 to 8) bank is also referred to as GPIOi.

7.25 Programmable Real-Time Unit Subsystem and Industrial Communication Subsystem (PRU-ICSS)

The device Programmable Real-Time Unit and Industrial Communication Subsystem (PRU-ICSS) consists of dual 32-bit Load / Store RISC CPU cores - Programmable Real-Time Units (PRU0 and PRU1), shared, data, and instruction memories, internal peripheral modules, and an interrupt controller (PRU-ICSS_INTC). The programmable nature of the PRUs, along with their access to pins, events and all SoC resources, provides flexibility in implementing fast real-time responses, specialized data handling operations, customer peripheral interfaces, and in off-loading tasks from the other processor cores of the system-on-chip (SoC).

The each PRU-ICSS includes the following main features:

Copyright © 2015–2019, Texas Instruments Incorporated

- 21x Enhanced GPIs (EGPIs) and 21x Enhanced GPOs (EGPOs) with asynchronous capture and serial support per each PRU CPU core
- One Ethernet MII_RT module (PRU-ICSS_MII_RT) with two MII ports and configurable connections to PRUs
- 1 MDIO Port (PRU-ICSS_MII_MDIO)
- One Industrial Ethernet Peripheral (IEP) to manage/generate Industrial Ethernet functions
- 1 x 16550-compatible UART with a dedicated 192 MHz clock to support 12Mbps Profibus
- 1 Industrial Ethernet timer with 7/9 capture and 8 compare events
- 1 Enhanced Capture Module (ECAP)
- 1 Interrupt Controller (PRU-ICSS_INTC)
- A flexible power management support
- Integrated switched central resource with programmable priority
- Parity control supported by all memories

注意

The IO timings provided in this section are only valid if signals within a single IOSET are used. The IOSETs are defined in the 表 7-154 and 表 7-155.

注: For more information about PRU-ICSS subsystems interfaces, see the device TRM.

注: To configure the desired virtual mode the user must set MODESELECT bit and DELAYMODE bitfield for each corresponding pad control register.

The pad control registers are presented in 表 4-3 and described in Device TRM, *Chapter 18 - Control Module*.

7.25.1 Programmable Real-Time Unit (PRU-ICSS PRU)

7.25.1.1 PRU-ICSS PRU Direct Input/Output Mode Electrical Data and Timing

表 7-135. PRU-ICSS PRU Timing Requirements - Direct Input Mode

NO.	PARAMETER	DESCRIPTION	MIN	MAX	UNIT
1	$t_{w(GPI)}$	Pulse width, GPI	2*P (1)		ns
2	$t_{sk(GPI)}$	Skew between GPI[20:0] signals		4.5	ns

(1) PRUSS_GICLK clock period

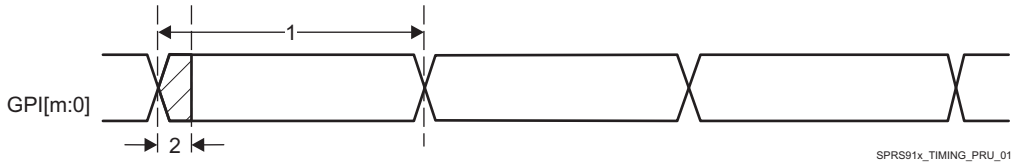

図 7-91. PRU-ICSS PRU Direct Input Timing

(1) m in GPI[m:0] = 20

表 7-136. PRU-ICSS PRU Switching Requirements – Direct Output Mode

NO.	PARAMETER	DESCRIPTION	MIN	MAX	UNIT
1	$t_{w(GPO)}$	Pulse width, GPO	2*P (1)		ns
2	$t_{sk(GPO)}$	Skew between GPO[20:0] signals		4.5	ns

(1) PRUSS_GICLK clock period

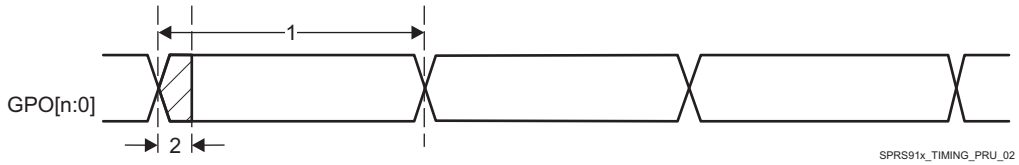

図 7-92. PRU-ICSS PRU Direct Output Timing

(1) n in GPO[n:0] = 20

7.25.1.2 PRU-ICSS PRU Parallel Capture Mode Electrical Data and Timing

表 7-137. PRU-ICSS PRU Timing Requirements - Parallel Capture Mode

NO.	PARAMETER	DESCRIPTION	MIN	MAX	UNIT
1	$t_{w(CLOCKIN)}$	Cyle time, CLOCKIN	20		ns
2	$t_{w(CLOCKIN_L)}$	Pulse duration, CLOCKIN low	9	11	ns
3	$t_{w(CLOCKIN_H)}$	Pulse duration, CLOCKIN high	9	11	ns
4	$t_{su(DATAIN-CLOCKIN)}$	Setup time, DATAIN valid before CLOCKIN	4.5		ns
5	$t_{h(CLOCKIN-DATAIN)}$	Hold time, DATAIN valid after CLOCKIN	0		ns

(1) PRUSS_GICLK clock period

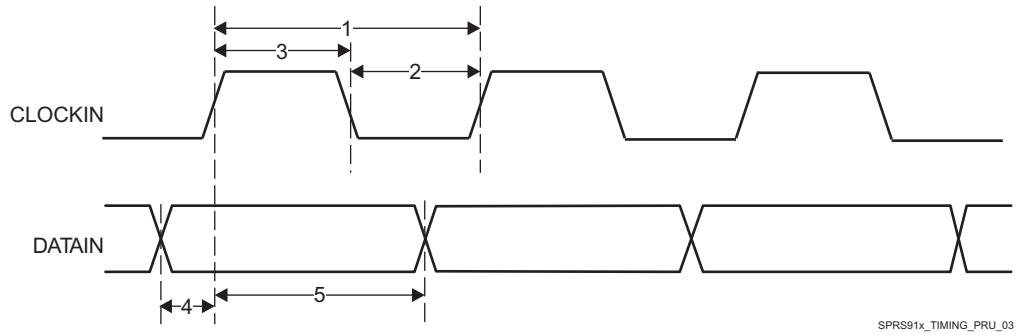

図 7-93. PRU-ICSS PRU Parallel Capture Timing - Rising Edge Mode

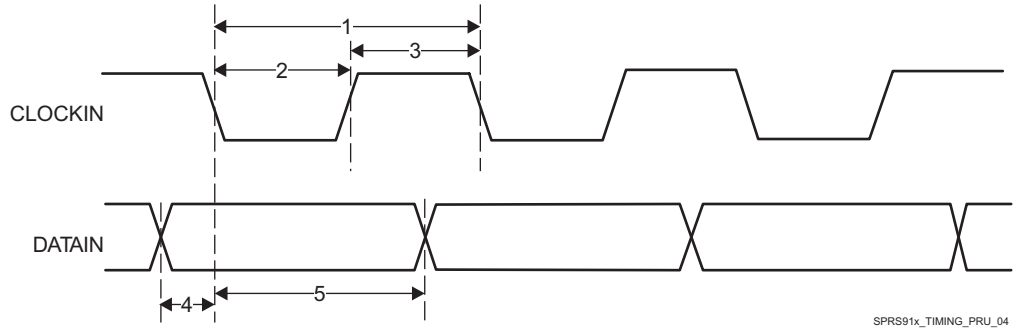

図 7-94. PRU-ICSS PRU Parallel Capture Timing - Falling Edge Mode

7.25.1.3 PRU-ICSS PRU Shift Mode Electrical Data and Timing

表 7-138. PRU-ICSS PRU Timing Requirements – Shift In Mode

NO.	PARAMETER	DESCRIPTION	MIN	MAX	UNIT
1	$t_{c(DATAIN)}$	Cycle time, DATAIN	10.00		ns
2	$t_{w(DATAIN)}$	Pulse width, DATAIN	0.45*P (1)	0.55*P (1)	ns

Copyright © 2015–2019, Texas Instruments Incorporated

(1) P = 10.00ns

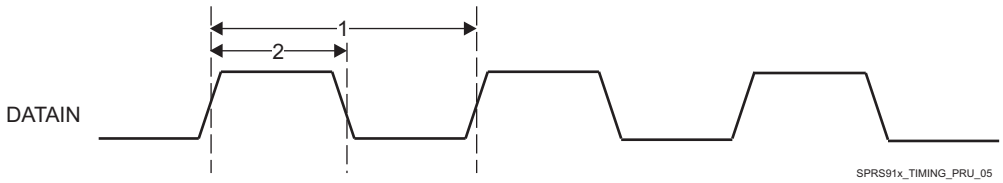

図 7-95. PRU-ICSS PRU Shift In Timing

表 7-139. PRU-ICSS PRU Switching Requirements - Shift Out Mode

NO.	PARAMETER	DESCRIPTION	MIN	MAX	UNIT
1	$t_{c(CLOCKOUT)}$	Cycle time, CLOCKOUT	10.00		ns
2	$t_{w(CLOCKOUT)}$	Pulse width, CLOCKOUT	0.45*P (1)	0.55*P (1)	ns
3	$t_{d(CLOCKOUT-DATAOUT)}$	Delay time, CLOCKOUT to DATAOUT Valid	-3.00	3.60	ns

(1) P = 10.00ns

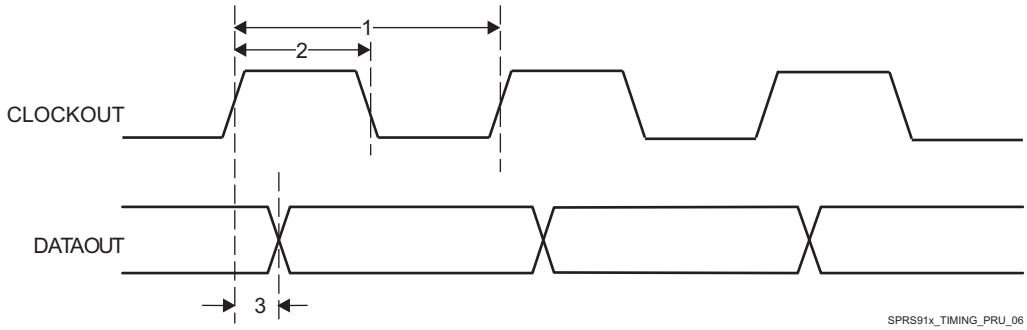

図 7-96. PRU-ICSS PRU Shift Out Timing

7.25.2 PRU-ICSS EtherCAT (PRU-ICSS ECAT)

7.25.2.1 PRU-ICSS ECAT Electrical Data and Timing

表 7-140. PRU-ICSS ECAT Timing Requirements – Input Validated With LATCH_IN

NO.	PARAMETER	DESCRIPTION	MIN	MAX	UNIT
1	$t_{w(EDIO_LATCH_IN)}$	Pulse width, EDIO_LATCH_IN	100.00		ns
2	$t_{su(EDIO_DATA_IN-EDIO_LATCH_IN)}$	Setup time, EDIO_DATA_IN valid before EDIO_LATCH_IN active edge	20.00		ns
3	$t_{h(EDIO_LATCH_IN-EDIO_DATA_IN)}$	Hold time, EDIO_DATA_IN valid after EDIO_LATCH_IN active edge	20.00		ns

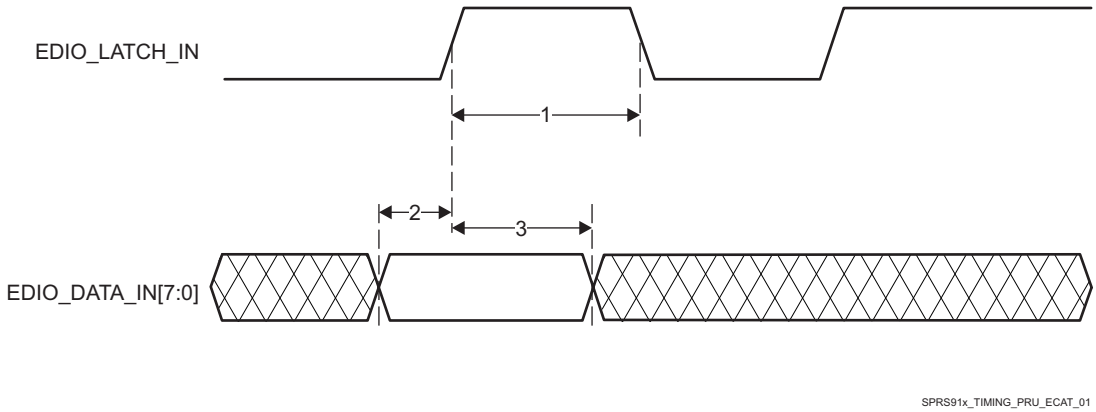

図 7-97. PRU-ICSS ECAT Input Validated with LATCH_IN Timing

表 7-141. PRU-ICSS ECAT Timing Requirements – Input Validated With SYNCx

NO.	PARAMETER	DESCRIPTION	MIN	MAX	UNIT
1	$t_{w(EDC_SYNCx_OUT)}$	Pulse width, EDC_SYNCx_OUT	100.00		ns
2	$t_{su(EDIO_DATA_IN-EDC_SYNCx_OUT)}$	Setup time, EDIO_DATA_IN valid before EDC_SYNCx_OUT active edge	20.00		ns
3	$t_{h(EDC_SYNCx_OUT-EDIO_DATA_IN)}$	Hold time, EDIO_DATA_IN valid after EDC_SYNCx_OUT active edge	20.00		ns

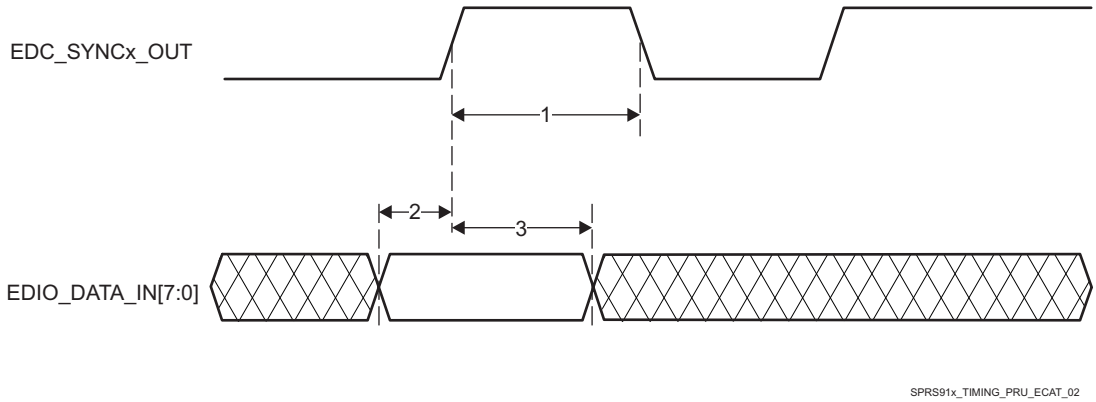

図 7-98. PRU-ICSS ECAT Input Validated With SYNCx Timing

表 7-142. PRU-ICSS ECAT Timing Requirements – Input Validated With Start of Frame (SOF)

NO.	PARAMETER	DESCRIPTION	MIN	MAX	UNIT
1	$t_{w(EDIO_SOF)}$	Pulse duration, EDIO_SOF	4*P (1)	5*P (1)	ns
2	$t_{su(EDIO_DATA_IN-EDIO_SOF)}$	Setup time, EDIO_DATA_IN valid before EDIO_SOF active edge	20.00		ns
3	$t_{h(EDIO_SOF-EDIO_DATA_IN)}$	Hold time, EDIO_DATA_IN valid after EDIO_SOF active edge	20.00		ns

Copyright © 2015–2019, Texas Instruments Incorporated

(1) PRUSS_IEP_CLK clock period

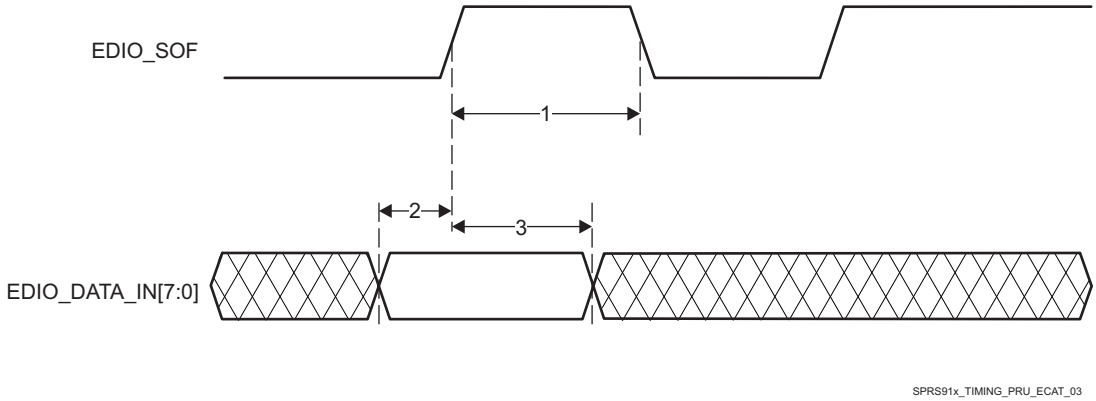

図 7-99. PRU-ICSS ECAT Input Validated With SOF

表 7-143. PRU-ICSS ECAT Timing Requirements - LATCHx_IN

NO.	PARAMETER	DESCRIPTION	MIN	MAX	UNIT
1	$t_{w(EDC_LATCHx_IN)}$	Pulse duration, EDC_LATCHx_IN	3*P (1)		ns

(1) PRUSS_IEP_CLK clock period

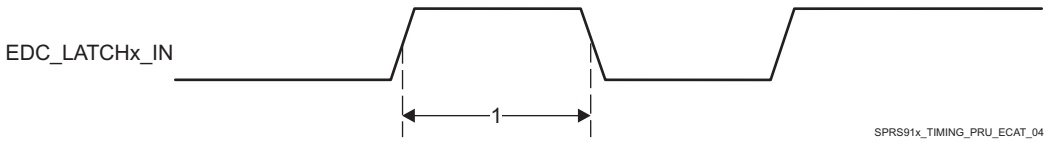

図 7-100. PRU-ICSS ECAT LATCHx_IN Timing

表 7-144. PRU-ICSS ECAT Switching Requirements - Digital IOs

NO.	PARAMETER	DESCRIPTION	MIN	MAX	UNIT
1	$t_{sk(EDIO_DATA_OUT)}$	EDIO_DATA_OUT skew		8	ns

7.25.3 PRU-ICSS MII_RT and Switch

7.25.3.1 PRU-ICSS MDIO Electrical Data and Timing

表 7-145. PRU-ICSS MDIO Timing Requirements – MDIO_DATA

NO.	PARAMETER	DESCRIPTION	MIN	MAX	UNIT
1	$t_{su(MDIO-MDC)}$	Setup time, MDIO valid before MDC high	90		ns
2	$t_{h(MDIO-MDC)}$	Hold time, MDIO valid from MDC high	0		ns

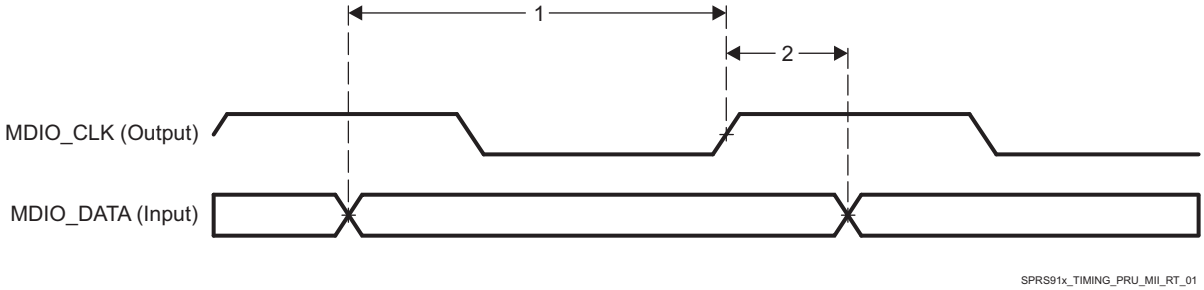

図 7-101. PRU-ICSS MDIO_DATA Timing - Input Mode

表 7-146. PRU-ICSS MDIO Switching Characteristics - MDIO_CLK

NO.	PARAMETER	DESCRIPTION	MIN	MAX	UNIT
1	$t_{c(MDC)}$	Cycle time, MDC	400		ns
2	$t_{w(MDCH)}$	Pulse duration, MDC high	160		ns
3	$t_{w(MDCL)}$	Pulse duration, MDC low	160		ns
4	$t_{t(MDC)}$	Transition time, MDC		5	ns

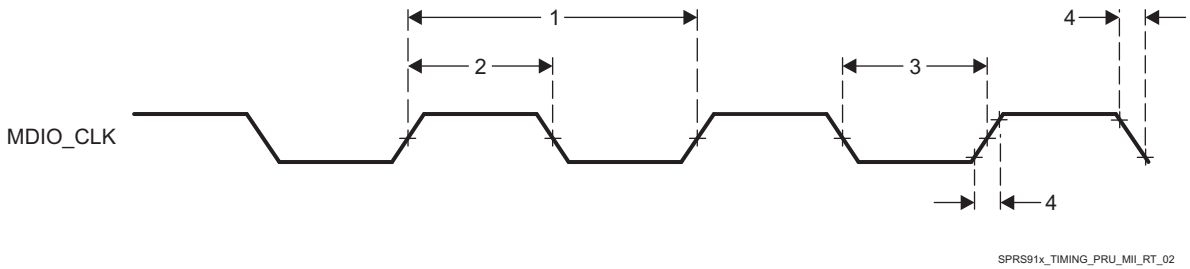

図 7-102. PRU-ICSS MDIO_CLK Timing

表 7-147. PRU-ICSS MDIO Switching Characteristics – MDIO_DATA

NO.	PARAMETER	DESCRIPTION	MIN	MAX	UNIT
1	$t_{d(MDC-MDIO)}$	Delay time, MDC high to MDIO valid	0	390	ns

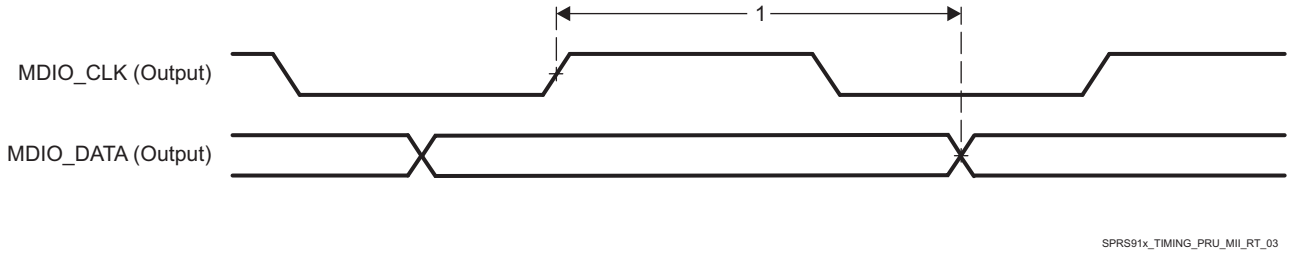

図 7-103. PRU-ICSS MDIO_DATA Timing – Output Mode

7.25.3.2 PRU-ICSS MII_RT Electrical Data and Timing

注: In order to ensure the MII_RT IO timing values published in the device data manual, the PRUSS_GICLK clock must be configured for 200MHz (default value) and the TX_CLK_DELAY bitfield in the PRUSS_MII_RT_TXCFG0/1 register must be configured as follows:

- 100 Mbps mode: 6h (non-default value)
- 10 Mbps mode: 0h (default value)

表 7-148. PRU-ICSS MII_RT Timing Requirements – MII[x]_RXCLK

NO.	PARAMETER	DESCRIPTION	SPEED	MIN	MAX	UNIT
1	$t_{c(RX_CLK)}$	Cycle time, RX_CLK	10 Mbps	399.96	400.04	ns
			100 Mbps	39.996	40.004	ns
2	$t_{w(RX_CLKH)}$	Pulse duration, RX_CLK high	10 Mbps	140	260	ns
			100 Mbps	14	26	ns
3	$t_{w(RX_CLKL)}$	Pulse duration, RX_CLK low	10 Mbps	140	260	ns
			100 Mbps	14	26	ns

Copyright © 2015–2019, Texas Instruments Incorporated

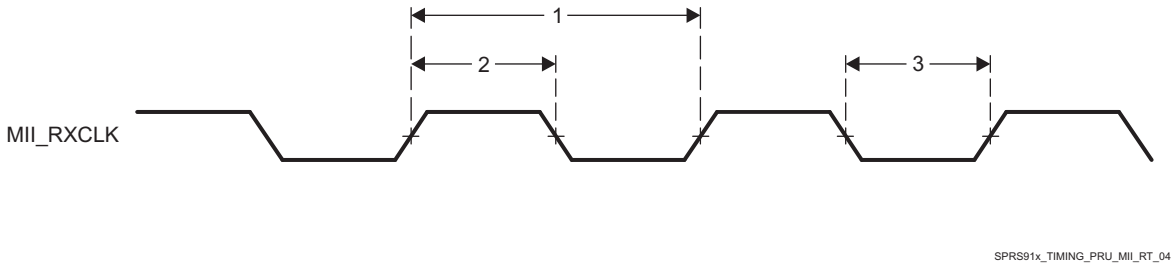

図 7-104. PRU-ICSS MII[x]_RXCLK Timing

表 7-149. PRU-ICSS MII_RT Timing Requirements - MII[x]_TXCLK

NO.	PARAMETER	DESCRIPTION	SPEED	MIN	MAX	UNIT
1	$t_{c(TX_CLK)}$	Cycle time, TX_CLK	10 Mbps	399.96	400.04	ns
			100 Mbps	39.996	40.004	ns
2	$t_{w(TX_CLKH)}$	Pulse duration, TX_CLK high	10 Mbps	140	260	ns
			100 Mbps	14	26	ns
3	$t_{w(TX_CLKL)}$	Pulse duration, TX_CLK low	10 Mbps	140	260	ns
			100 Mbps	14	26	ns
4	$t_{t(TX_CLK)}$	Transition time, TX_CLK	10 Mbps		3	ns
			100 Mbps		3	ns

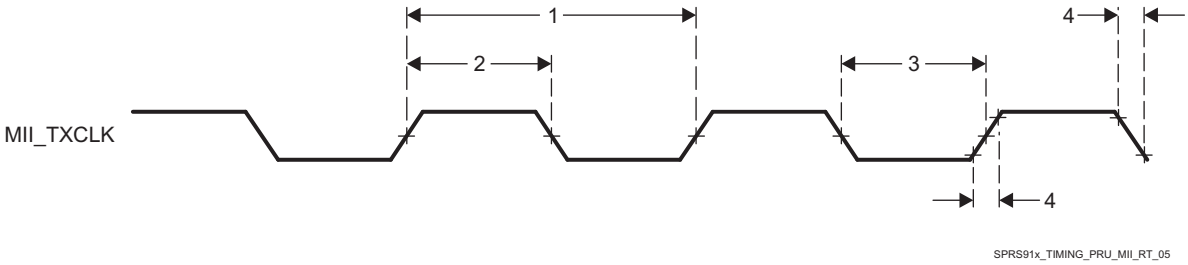

図 7-105. PRU-ICSS MII[x]_TXCLK Timing

表 7-150. PRU-ICSS MII_RT Timing Requirements - MII_RXD[3:0], MII_RXDV, and MII_RXER

NO.	PARAMETER	DESCRIPTION	SPEED	MIN	MAX	UNIT
1	$t_{su(RXD\text{-}RX_CLK)}$	Setup time, RXD[3:0] valid before RX_CLK	10 Mbps	8		ns
	$t_{su(RX_DV\text{-}RX_CLK)}$	Setup time, RX_DV valid before RX_CLK				
	$t_{su(RX_ER\text{-}RX_CLK)}$	Setup time, RX_ER valid before RX_CLK				
	$t_{su(RXD\text{-}RX_CLK)}$	Setup time, RXD[3:0] valid before RX_CLK	100 Mbps	8		ns
	$t_{su(RX_DV\text{-}RX_CLK)}$	Setup time, RX_DV valid before RX_CLK				
	$t_{su(RX_ER\text{-}RX_CLK)}$	Setup time, RX_ER valid before RX_CLK				
2	$t_{h(RX_CLK\text{-}RXD)}$	Hold time RXD[3:0] valid after RX_CLK	10 Mbps	8		ns
	$t_{h(RX_CLK\text{-}RX_DV)}$	Hold time RX_DV valid after RX_CLK				
	$t_{h(RX_CLK\text{-}RX_ER)}$	Hold time RX_ER valid after RX_CLK				
	$t_{h(RX_CLK\text{-}RXD)}$	Hold time RXD[3:0] valid after RX_CLK	100 Mbps	8		ns
	$t_{h(RX_CLK\text{-}RX_DV)}$	Hold time RX_DV valid after RX_CLK				
	$t_{h(RX_CLK\text{-}RX_ER)}$	Hold time RX_ER valid after RX_CLK				

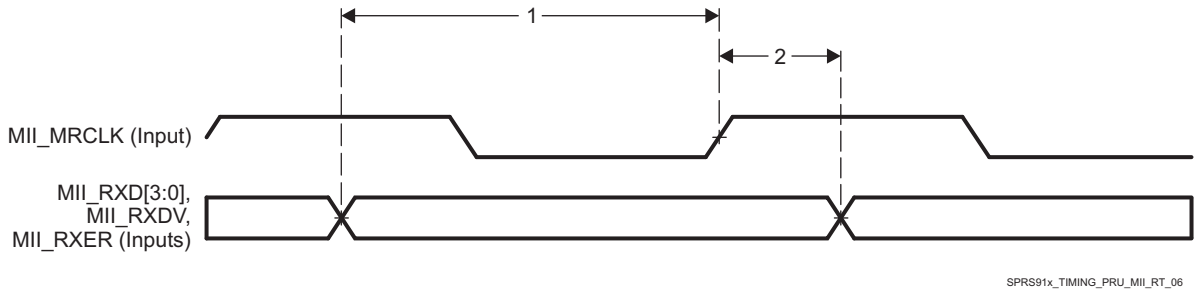

図 7-106. PRU-ICSS MII_RXD[3:0], MII_RXDV, and MII_RXER Timing

表 7-151. PRU-ICSS MII_RT Switching Characteristics - MII_TXD[3:0] and MII_TXEN

NO.	PARAMETER	DESCRIPTION	SPEED	MIN	MAX	UNIT
1	$t_{d(TX_CLK-TXD)}$	Delay time, TX_CLK high to TXD[3:0] valid	10 Mbps	5	33	ns
	$t_{d(TX_CLK-TX_EN)}$	Delay time, TX_CLK to TX_EN valid				
	$t_{d(TX_CLK-TXD)}$	Delay time, TX_CLK high to TXD[3:0] valid	100 Mbps	5	25	ns
	$t_{d(TX_CLK-TX_EN)}$	Delay time, TX_CLK to TX_EN valid				

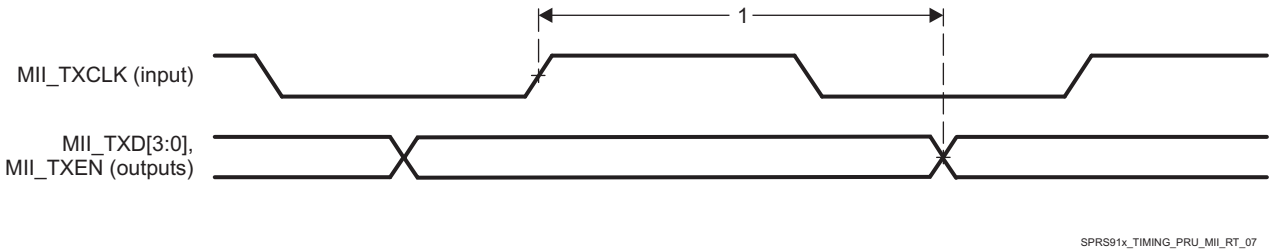

図 7-107. PRU-ICSS MII_TXD[3:0], MII_TXEN Timing

7.25.4 PRU-ICSS Universal Asynchronous Receiver Transmitter (PRU-ICSS UART)

表 7-152. Timing Requirements for PRU-ICSS UART Receive

NO.	PARAMETER	DESCRIPTION	MIN	MAX	UNIT
3	$t_{w(RX)}$	Pulse duration, receive start, stop, data bit	0.96U (1)	1.05U	ns

(1) U = UART baud time = 1/programmed baud rate.

表 7-153. Switching Characteristics Over Recommended Operating Conditions for PRU-ICSS UART Transmit

NO.	PARAMETER	DESCRIPTION	MIN	MAX	UNIT
1	$f$baud(baud)	Maximum programmable baud rate	0	12	MHz
2	$t_{w(TX)}$	Pulse duration, transmit start, stop, data bit	U - 2 (1)	U + 2	ns

Copyright © 2015–2019, Texas Instruments Incorporated

(1) U = UART baud time = 1/programmed baud rate.

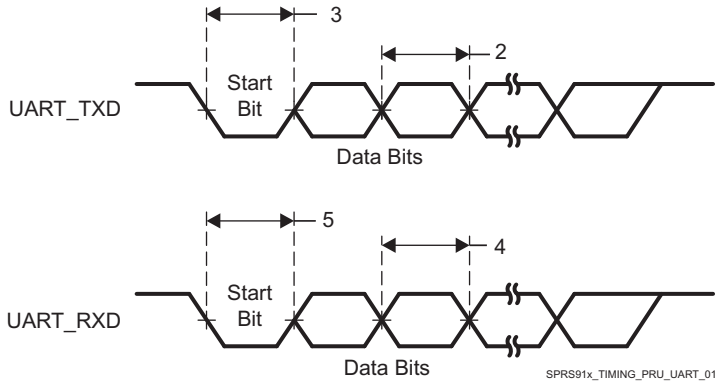

図 7-108. PRU-ICSS UART Timing

7.25.5 PRU-ICSS IOSETs

In 表 7-154 and 表 7-155 are presented the specific groupings of signals (IOSET) for use with PRU-ICSS1 and PRU-ICSS2.

表 7-154. PRU-ICSS1 IOSETs

SIGNALS	IOSET1		IOSET2	
	BALL	MUX	BALL	MUX
PRU-ICSS1				
pr1_pru1_gpi20	A4	12		
pr1_pru1_gpi19	B5	12		
pr1_pru1_gpi18	B4	12		
pr1_pru1_gpi17	B3	12		
pr1_pru1_gpi16	A3	12		
pr1_pru1_gpi15	C5	12		
pr1_pru1_gpi14	D6	12		
pr1_pru1_gpi13	B2	12		
pr1_pru1_gpi12	C4	12		
pr1_pru1_gpi11	C3	12		
pr1_pru1_gpi10	C2	12		
pr1_pru1_gpo20	A4	13		
pr1_pru1_gpo19	B5	13		
pr1_pru1_gpo18	B4	13		
pr1_pru1_gpo17	B3	13		
pr1_pru1_gpo16	A3	13		
pr1_pru1_gpo15	C5	13		
pr1_pru1_gpo14	D6	13		
pr1_pru1_gpo13	B2	13		
pr1_pru1_gpo12	C4	13		
pr1_pru1_gpo11	C3	13		
pr1_pru1_gpo10	C2	13		
pr1_pru1_gpi9	D5	12		
pr1_pru1_gpi8	F6	12		
pr1_pru1_gpi7	D3	12		
pr1_pru1_gpi6	E6	12		

表 7-154. PRU-ICSS1 IOSETs (continued)

SIGNALS	IOSET1		IOSET2	
	BALL	MUX	BALL	MUX
pr1_pru1_gpi5	F5	12		
pr1_pru1_gpi4	E4	12		
pr1_pru1_gpi3	C1	12		
pr1_pru1_gpi2	F4	12		
pr1_pru1_gpi1	D2	12		
pr1_pru1_gpi0	E2	12		
pr1_pru1_gpo9	D5	13		
pr1_pru1_gpo8	F6	13		
pr1_pru1_gpo7	D3	13		
pr1_pru1_gpo6	E6	13		
pr1_pru1_gpo5	F5	13		
pr1_pru1_gpo4	E4	13		
pr1_pru1_gpo3	C1	13		
pr1_pru1_gpo2	F4	13		
pr1_pru1_gpo1	D2	13		
pr1_pru1_gpo0	E2	13		
pr1_pru0_gpi20	AD3	12		
pr1_pru0_gpi19	AD2	12		
pr1_pru0_gpi18	AE6	12		
pr1_pru0_gpi17	AE2	12		
pr1_pru0_gpi16	AE1	12		
pr1_pru0_gpi15	AE5	12		
pr1_pru0_gpi14	AE3	12		
pr1_pru0_gpi13	AF1	12		
pr1_pru0_gpi12	AF4	12		
pr1_pru0_gpi11	AF3	12		
pr1_pru0_gpi10	AF6	12		
pr1_pru0_gpo20	AD3	13		
pr1_pru0_gpo19	AD2	13		
pr1_pru0_gpo18	AE6	13		
pr1_pru0_gpo17	AE2	13		
pr1_pru0_gpo16	AE1	13		
pr1_pru0_gpo15	AE5	13		
pr1_pru0_gpo14	AE3	13		
pr1_pru0_gpo13	AF1	13		
pr1_pru0_gpo12	AF4	13		
pr1_pru0_gpo11	AF3	13		
pr1_pru0_gpo10	AF6	13		
pr1_pru0_gpi9	AF2	12		
pr1_pru0_gpi8	AG5	12		
pr1_pru0_gpi7	AG3	12		
pr1_pru0_gpi6	AG2	12		
pr1_pru0_gpi5	AG4	12		
pr1_pru0_gpi4	AH4	12		
pr1_pru0_gpi3	AG6	12		
pr1_pru0_gpi2	AH5	12		

Copyright © 2015–2019, Texas Instruments Incorporated

表 7-154. PRU-ICSS1 IOSETs (continued)

SIGNALS	IOSET1		IOSET2	
	BALL	MUX	BALL	MUX
pr1_pru0_gpi1	AH3	12		
pr1_pru0_gpi0	AH6	12		
pr1_pru0_gpo9	AF2	13		
pr1_pru0_gpo8	AG5	13		
pr1_pru0_gpo7	AG3	13		
pr1_pru0_gpo6	AG2	13		
pr1_pru0_gpo5	AG4	13		
pr1_pru0_gpo4	AH4	13		
pr1_pru0_gpo3	AG6	13		
pr1_pru0_gpo2	AH5	13		
pr1_pru0_gpo1	AH3	13		
pr1_pru0_gpo0	AH6	13		
pr1_mii1_crs	A4	11		
pr1_mii1_rxlink	B4	11		
pr1_mii1_col	B5	11		
pr1_mii0_col	V1	11		
pr1_mii0_rxlink	U4	11		
pr1_mii0_crs	V7	11		
pr1_edio_data_out7	AD3	11	D1	13
pr1_edio_data_out6	AD2	11	F3	13
pr1_edio_data_out5	AE6	11	F2	13
pr1_edio_data_out4	AE2	11	G6	13
pr1_edio_data_out3	AE1	11	G1	13
pr1_edio_data_out2	AE5	11	H7	13
pr1_edio_data_out1	AE3	11	G2	13
pr1_edio_data_out0	AF1	11	E1	13
pr1_edio_data_in7	AD3	10	D1	12
pr1_edio_data_in6	AD2	10	F3	12
pr1_edio_data_in5	AE6	10	F2	12
pr1_edio_data_in4	AE2	10	G6	12
pr1_edio_data_in3	AE1	10	G1	12
pr1_edio_data_in2	AE5	10	H7	12
pr1_edio_data_in1	AE3	10	G2	12
pr1_edio_data_in0	AF1	10	E1	12
pr1_edio_sof	AF4	10	F4	11
pr1_edc_latch0_in	AG3	10	E2	11
pr1_edc_latch1_in	AG5	10		
pr1_edc_sync1_out	AF6	10		
pr1_edc_sync0_out	AF2	10	D2	11
pr1_edio_latch_in	AF3	10		
pr1_uart0_cts_n	G1	11	F11	10
pr1_uart0_rts_n	G6	11	G10	10
pr1_uart0_txd	F3	11	G11	10
pr1_uart0_rxd	F2	11	F10	10
pr1_ecap0_ecap_capin_apwm_o	D1	11	E9	10
PRU-ICSS1 MII				

表 7-154. PRU-ICSS1 IOSETs (continued)

SIGNALS	IOSET1		IOSET2	
	BALL	MUX	BALL	MUX
pr1_mii1_txd3	F5	11		
pr1_mii1_txd2	E6	11		
pr1_mii1_txd1	D5	11		
pr1_mii1_txd0	C2	11		
pr1_mii1_rxd3	B2	11		
pr1_mii1_rxd2	D6	11		
pr1_mii1_rxd1	C5	11		
pr1_mii1_rxd0	A3	11		
pr1_mii1_rxdv	C4	11		
pr1_mii1_txen	E4	11		
pr1_mii1_rxer	B3	11		
pr1_mii_mr1_clk	C3	11		
pr1_mii_mt1_clk	C1	11		
pr1_mii0_txd3	V5	11		
pr1_mii0_txd2	V4	11		
pr1_mii0_txd1	Y2	11		
pr1_mii0_txd0	W2	11		
pr1_mii0_rxd3	W9	11		
pr1_mii0_rxd2	V9	11		
pr1_mii0_rxd1	V6	11		
pr1_mii0_rxd0	U6	11		
pr1_mii0_rxdv	V2	11		
pr1_mii0_txen	V3	11		
pr1_mii0_rxer	U7	11		
pr1_mii_mt0_clk	U5	11		
pr1_mii_mr0_clk	Y1	11		
pr1_mdio_mdclk	D3	11		
pr1_mdio_data	F6	11		

表 7-155. PRU-ICSS2 IOSETs

SIGNALS	IOSET1		IOSET2	
	BALL	MUX	BALL	MUX
PRU-ICSS2				
pr2_pru1_gpi20	F10	12	F10	12
pr2_pru1_gpi19	G10	12	G10	12
pr2_pru1_gpi18	F11	12	F11	12
pr2_pru1_gpi17	E11	12	E11	12
pr2_pru1_gpi16	W2	12	G14	12
pr2_pru1_gpi15	Y2	12	A13	12
pr2_pru1_gpi14	V3	12	E14	12
pr2_pru1_gpi13	V4	12	A12	12
pr2_pru1_gpi12	V5	12	B13	12
pr2_pru1_gpi11	U5	12	A11	12
pr2_pru1_gpi10	U6	12	B12	12
pr2_pru1_gpi9	V6	12	F12	12
pr2_pru1_gpi8	U7	12	G12	12

Copyright © 2015–2019, Texas Instruments Incorporated

表 7-155. PRU-ICSS2 IOSETs (continued)

SIGNALS	IOSET1		IOSET2	
	BALL	MUX	BALL	MUX
pr2_pru1_gpi7	V7	12	C14	12
pr2_pru1_gpi6	V9	12	E17	12
pr2_pru1_gpi5	W9	12	D18	12
pr2_pru1_gpi4	Y1	12	AA4	12
pr2_pru1_gpi3	V2	12	AB3	12
pr2_pru1_gpi2	U3	12	AB9	12
pr2_pru1_gpi1	U4	12	AA3	12
pr2_pru1_gpi0	V1	12	D17	12
pr2_pru1_gpo20	F10	13	F10	13
pr2_pru1_gpo19	G10	13	G10	13
pr2_pru1_gpo18	F11	13	F11	13
pr2_pru1_gpo17	E11	13	E11	13
pr2_pru1_gpo16	W2	13	G14	13
pr2_pru1_gpo15	Y2	13	A13	13
pr2_pru1_gpo14	V3	13	E14	13
pr2_pru1_gpo13	V4	13	A12	13
pr2_pru1_gpo12	V5	13	B13	13
pr2_pru1_gpo11	U5	13	A11	13
pr2_pru1_gpo10	U6	13	B12	13
pr2_pru1_gpo9	V6	13	F12	13
pr2_pru1_gpo8	U7	13	G12	13
pr2_pru1_gpo7	V7	13	C14	13
pr2_pru1_gpo6	V9	13	E17	13
pr2_pru1_gpo5	W9	13	D18	13
pr2_pru1_gpo4	Y1	13	AA4	13
pr2_pru1_gpo3	V2	13	AB3	13
pr2_pru1_gpo2	U3	13	AB9	13
pr2_pru1_gpo1	U4	13	AA3	13
pr2_pru1_gpo0	V1	13	D17	13
pr2_pru0_gpi20	A10	12	F14	12
pr2_pru0_gpi19	B9	12	A18	12
pr2_pru0_gpi18	A9	12	A19	12
pr2_pru0_gpi17	C9	12	A16	12
pr2_pru0_gpi16	A8	12	C15	12
pr2_pru0_gpi15	A7	12	C17	12
pr2_pru0_gpi14	B8	12	B19	12
pr2_pru0_gpi13	B7	12	F15	12
pr2_pru0_gpi12	C7	12	B18	12
pr2_pru0_gpi11	C8	12	AB5	12
pr2_pru0_gpi10	C6	12	AB8	12
pr2_pru0_gpi9	A5	12	AD6	12
pr2_pru0_gpi8	D8	12	AC8	12
pr2_pru0_gpi7	D7	12	AC3	12
pr2_pru0_gpi6	D9	12	AC9	12
pr2_pru0_gpi5	E8	12	AC6	12
pr2_pru0_gpi4	E7	12	AC7	12

Copyright © 2015–2019, Texas Instruments Incorporated

表 7-155. PRU-ICSS2 IOSETs (continued)

SIGNALS	IOSET1		IOSET2	
	BALL	MUX	BALL	MUX
pr2_pru0_gpi3	F8	12	AC4	12
pr2_pru0_gpi2	F9	12	AD4	12
pr2_pru0_gpi1	E9	12	AB4	12
pr2_pru0_gpi0	G11	12	AC5	12
pr2_pru0_gpo20	A10	13	F14	13
pr2_pru0_gpo19	B9	13	A18	13
pr2_pru0_gpo18	A9	13	A19	13
pr2_pru0_gpo17	C9	13	A16	13
pr2_pru0_gpo16	A8	13	C15	13
pr2_pru0_gpo15	A7	13	C17	13
pr2_pru0_gpo14	B8	13	B19	13
pr2_pru0_gpo13	B7	13	F15	13
pr2_pru0_gpo12	C7	13	B18	13
pr2_pru0_gpo11	C8	13	AB5	13
pr2_pru0_gpo10	C6	13	AB8	13
pr2_pru0_gpo9	A5	13	AD6	13
pr2_pru0_gpo8	D8	13	AC8	13
pr2_pru0_gpo7	D7	13	AC3	13
pr2_pru0_gpo6	D9	13	AC9	13
pr2_pru0_gpo5	E8	13	AC6	13
pr2_pru0_gpo4	E7	13	AC7	13
pr2_pru0_gpo3	F8	13	AC4	13
pr2_pru0_gpo2	F9	13	AD4	13
pr2_pru0_gpo1	E9	13	AB4	13
pr2_pru0_gpo0	G11	13	AC5	13
pr2_mii1_crs	E17	11		
pr2_mii1_rxlink	C17	11		
pr2_mii0_crs	B18	11		
pr2_mii0_rxlink	A16	11		
pr2_mii0_col	F15	11		
pr2_mii1_col	D18	11		
pr2_edio_data_out7	A10	11		
pr2_edio_data_out6	B9	11		
pr2_edio_data_out5	A9	11		
pr2_edio_data_out4	C9	11		
pr2_edio_data_out3	A8	11		
pr2_edio_data_out2	A7	11		
pr2_edio_data_out1	B8	11		
pr2_edio_data_out0	B7	11		
pr2_edio_data_in7	A10	10		
pr2_edio_data_in6	B9	10		
pr2_edio_data_in5	A9	10		
pr2_edio_data_in4	C9	10		
pr2_edio_data_in3	A8	10		
pr2_edio_data_in2	A7	10		
pr2_edio_data_in1	B8	10		

Copyright © 2015–2019, Texas Instruments Incorporated

表 7-155. PRU-ICSS2 IOSETs (continued)

SIGNALS	IOSET1		IOSET2	
	BALL	MUX	BALL	MUX
pr2_edio_data_in0	B7	10		
pr2_edio_latch_in	D9	10		
pr2_edio_sof	D7	10		
pr2_edc_sync0_out	E7	10		
pr2_edc_sync1_out	E8	10		
pr2_edc_latch0_in	F9	10		
pr2_edc_latch1_in	F8	10		
pr2_uart0_rxd	C6	10		
pr2_uart0_txd	C8	10		
pr2_uart0_cts_n	D8	10		
pr2_uart0_rts_n	A5	10		
pr2_ecap0_ecap_capin_apwm_o	C7	10		
PRU-ICSS2 MII				
pr2_mii1_txd3	AD4	11		
pr2_mii1_txd2	AC4	11		
pr2_mii1_txd1	AC7	11		
pr2_mii1_txd0	AC6	11		
pr2_mii1_rxd3	AC8	11		
pr2_mii1_rxd2	AD6	11		
pr2_mii1_rxd1	AB8	11		
pr2_mii1_rxd0	AB5	11		
pr2_mii_mr1_clk	AC9	11		
pr2_mii1_rxer	B19	11		
pr2_mii_mt1_clk	AC5	11		
pr2_mii1_rxdv	AC3	11		
pr2_mii1_txen	AB4	11		
pr2_mii0_txd3	A11	11		
pr2_mii0_txd2	B13	11		
pr2_mii0_txd1	A12	11		
pr2_mii0_txd0	E14	11		
pr2_mii0_rxd3	F14	11		
pr2_mii0_rxd2	A19	11		
pr2_mii0_rxd1	A18	11		
pr2_mii0_rxd0	C15	11		
pr2_mii_mr0_clk	A13	11		
pr2_mii0_rxer	G12	11		
pr2_mii_mt0_clk	F12	11		
pr2_mii0_rxdv	G14	11		
pr2_mii0_txen	B12	11		
pr2_mdio_mdclk	C14	11	AB3	11
pr2_mdio_data	D14	11	AA4	11

7.25.6 PRU-ICSS Manual Functional Mapping

注: To configure the desired Manual IO Timing Mode the user must follow the steps described in section "*Manual IO Timing Modes*" of the Device TRM.

The associated registers to configure are listed in the **CFG REGISTER** column. For more information see the *Control Module Chapter* in the Device TRM.

Manual IO Timings Modes must be used to ensure some IO timings for PRU-ICSS1 PRU0 Direct Output mode. See 表 7-2 *Modes Summary* for a list of IO timings requiring the use of Manual IO Timings Modes. See 表 7-156 *Manual Functions Mapping for PRU-ICSS1 PRU0 Direct Output mode* for a definition of the Manual modes.

表 7-156 lists the A_DELAY and G_DELAY values needed to calculate the correct values to be set in the CFG_x registers.

表 7-156. Manual Functions Mapping for PRU-ICSS1 PRU0 Direct Output mode

BALL	BALL NAME	PR1_PRU0_DIR_OUT_MANUAL		CFG REGISTER	MUXMODE
		A_DELAY (ps)	G_DELAY (ps)		13
AG3	vin1a_d10	0	600	CFG_VIN1A_D10_OUT	pr1_pru0_gpo7
AG5	vin1a_d11	0	0	CFG_VIN1A_D11_OUT	pr1_pru0_gpo8
AF2	vin1a_d12	0	2700	CFG_VIN1A_D12_OUT	pr1_pru0_gpo9
AF6	vin1a_d13	0	200	CFG_VIN1A_D13_OUT	pr1_pru0_gpo10
AF3	vin1a_d14	0	800	CFG_VIN1A_D14_OUT	pr1_pru0_gpo11
AF4	vin1a_d15	0	0	CFG_VIN1A_D15_OUT	pr1_pru0_gpo12
AF1	vin1a_d16	0	100	CFG_VIN1A_D16_OUT	pr1_pru0_gpo13
AE3	vin1a_d17	0	300	CFG_VIN1A_D17_OUT	pr1_pru0_gpo14
AE5	vin1a_d18	0	0	CFG_VIN1A_D18_OUT	pr1_pru0_gpo15
AE1	vin1a_d19	0	400	CFG_VIN1A_D19_OUT	pr1_pru0_gpo16
AE2	vin1a_d20	0	300	CFG_VIN1A_D20_OUT	pr1_pru0_gpo17
AE6	vin1a_d21	0	500	CFG_VIN1A_D21_OUT	pr1_pru0_gpo18
AD2	vin1a_d22	0	0	CFG_VIN1A_D22_OUT	pr1_pru0_gpo19
AD3	vin1a_d23	0	500	CFG_VIN1A_D23_OUT	pr1_pru0_gpo20
AH6	vin1a_d3	0	1600	CFG_VIN1A_D3_OUT	pr1_pru0_gpo0
AH3	vin1a_d4	0	2800	CFG_VIN1A_D4_OUT	pr1_pru0_gpo1
AH5	vin1a_d5	0	0	CFG_VIN1A_D5_OUT	pr1_pru0_gpo2
AG6	vin1a_d6	0	0	CFG_VIN1A_D6_OUT	pr1_pru0_gpo3
AH4	vin1a_d7	0	0	CFG_VIN1A_D7_OUT	pr1_pru0_gpo4
AG4	vin1a_d8	0	0	CFG_VIN1A_D8_OUT	pr1_pru0_gpo5
AG2	vin1a_d9	0	0	CFG_VIN1A_D9_OUT	pr1_pru0_gpo6

Manual IO Timings Modes must be used to ensure some IO timings for PRU-ICSS1 PRU1 Direct Output mode. See 表 7-2 *Modes Summary* for a list of IO timings requiring the use of Manual IO Timings Modes. See 表 7-157 *Manual Functions Mapping for PRU-ICSS1 PRU1 Direct Output mode* for a definition of the Manual modes.

表 7-157 lists the A_DELAY and G_DELAY values needed to calculate the correct values to be set in the CFG_x registers.

表 7-157. Manual Functions Mapping for PRU-ICSS1 PRU1 Direct Output mode

BALL	BALL NAME	PR1_PRU1_DIR_OUT_MANUAL		CFG REGISTER	MUXMODE
		A_DELAY (ps)	G_DELAY (ps)		13
D3	vin2a_d10	0	1900	CFG_VIN2A_D10_OUT	pr1_pru1_gpo7

Copyright © 2015–2019, Texas Instruments Incorporated

表 7-157. Manual Functions Mapping for PRU-ICSS1 PRU1 Direct Output mode (continued)

BALL	BALL NAME	PR1_PRU1_DIR_OUT_MANUAL		CFG REGISTER	MUXMODE
		A_DELAY (ps)	G_DELAY (ps)		13
F6	vin2a_d11	0	2700	CFG_VIN2A_D11_OUT	pr1_pru1_gpo8
D5	vin2a_d12	0	3400	CFG_VIN2A_D12_OUT	pr1_pru1_gpo9
C2	vin2a_d13	0	3200	CFG_VIN2A_D13_OUT	pr1_pru1_gpo10
C3	vin2a_d14	0	3000	CFG_VIN2A_D14_OUT	pr1_pru1_gpo11
C4	vin2a_d15	0	2900	CFG_VIN2A_D15_OUT	pr1_pru1_gpo12
B2	vin2a_d16	0	2700	CFG_VIN2A_D16_OUT	pr1_pru1_gpo13
D6	vin2a_d17	0	3000	CFG_VIN2A_D17_OUT	pr1_pru1_gpo14
C5	vin2a_d18	0	2200	CFG_VIN2A_D18_OUT	pr1_pru1_gpo15
A3	vin2a_d19	0	2300	CFG_VIN2A_D19_OUT	pr1_pru1_gpo16
B3	vin2a_d20	0	1800	CFG_VIN2A_D20_OUT	pr1_pru1_gpo17
B4	vin2a_d21	0	1900	CFG_VIN2A_D21_OUT	pr1_pru1_gpo18
B5	vin2a_d22	0	1400	CFG_VIN2A_D22_OUT	pr1_pru1_gpo19
A4	vin2a_d23	0	1900	CFG_VIN2A_D23_OUT	pr1_pru1_gpo20
E2	vin2a_d3	0	3900	CFG_VIN2A_D3_OUT	pr1_pru1_gpo0
D2	vin2a_d4	0	5100	CFG_VIN2A_D4_OUT	pr1_pru1_gpo1
F4	vin2a_d5	0	0	CFG_VIN2A_D5_OUT	pr1_pru1_gpo2
C1	vin2a_d6	0	2700	CFG_VIN2A_D6_OUT	pr1_pru1_gpo3
E4	vin2a_d7	0	2600	CFG_VIN2A_D7_OUT	pr1_pru1_gpo4
F5	vin2a_d8	0	2500	CFG_VIN2A_D8_OUT	pr1_pru1_gpo5
E6	vin2a_d9	0	1900	CFG_VIN2A_D9_OUT	pr1_pru1_gpo6

Manual IO Timings Modes must be used to ensure some IO timings for PRU-ICSS1 PRU0 Direct Input mode. See 表 7-2 *Modes Summary* for a list of IO timings requiring the use of Manual IO Timings Modes. See 表 7-158 *Manual Functions Mapping for PRU-ICSS1 PRU0 Direct Input mode* for a definition of the Manual modes.

表 7-158 lists the A_DELAY and G_DELAY values needed to calculate the correct values to be set in the CFG_x registers.

表 7-158. Manual Functions Mapping for PRU-ICSS1 PRU0 Direct Input mode

BALL	BALL NAME	PR1_PRU0_DIR_IN_MANUAL		CFG REGISTER	MUXMODE
		A_DELAY (ps)	G_DELAY (ps)		12
AG3	vin1a_d10	0	0	CFG_VIN1A_D10_IN	pr1_pru0_gpi7
AG5	vin1a_d11	0	300	CFG_VIN1A_D11_IN	pr1_pru0_gpi8
AF2	vin1a_d12	0	800	CFG_VIN1A_D12_IN	pr1_pru0_gpi9
AF6	vin1a_d13	0	0	CFG_VIN1A_D13_IN	pr1_pru0_gpi10
AF3	vin1a_d14	0	600	CFG_VIN1A_D14_IN	pr1_pru0_gpi11
AF4	vin1a_d15	0	1100	CFG_VIN1A_D15_IN	pr1_pru0_gpi12
AF1	vin1a_d16	0	800	CFG_VIN1A_D16_IN	pr1_pru0_gpi13
AE3	vin1a_d17	0	1000	CFG_VIN1A_D17_IN	pr1_pru0_gpi14
AE5	vin1a_d18	0	1100	CFG_VIN1A_D18_IN	pr1_pru0_gpi15
AE1	vin1a_d19	0	2800	CFG_VIN1A_D19_IN	pr1_pru0_gpi16
AE2	vin1a_d20	0	900	CFG_VIN1A_D20_IN	pr1_pru0_gpi17
AE6	vin1a_d21	0	800	CFG_VIN1A_D21_IN	pr1_pru0_gpi18
AD2	vin1a_d22	0	1400	CFG_VIN1A_D22_IN	pr1_pru0_gpi19
AD3	vin1a_d23	0	1001	CFG_VIN1A_D23_IN	pr1_pru0_gpi20
AH6	vin1a_d3	0	600	CFG_VIN1A_D3_IN	pr1_pru0_gpi0
AH3	vin1a_d4	0	0	CFG_VIN1A_D4_IN	pr1_pru0_gpi1

Copyright © 2015–2019, Texas Instruments Incorporated

表 7-158. Manual Functions Mapping for PRU-ICSS1 PRU0 Direct Input mode (continued)

BALL	BALL NAME	PR1_PRU0_DIR_IN_MANUAL		CFG REGISTER	MUXMODE
		A_DELAY (ps)	G_DELAY (ps)		12
AH5	vin1a_d5	0	900	CFG_VIN1A_D5_IN	pr1_pru0_gpi2
AG6	vin1a_d6	0	400	CFG_VIN1A_D6_IN	pr1_pru0_gpi3
AH4	vin1a_d7	0	500	CFG_VIN1A_D7_IN	pr1_pru0_gpi4
AG4	vin1a_d8	0	0	CFG_VIN1A_D8_IN	pr1_pru0_gpi5
AG2	vin1a_d9	0	0	CFG_VIN1A_D9_IN	pr1_pru0_gpi6

Manual IO Timings Modes must be used to ensure some IO timings for PRU-ICSS1 PRU1 Direct Input mode. See 表 7-2 *Modes Summary* for a list of IO timings requiring the use of Manual IO Timings Modes. See 表 7-159 *Manual Functions Mapping for PRU-ICSS1 PRU1 Direct Input mode* for a definition of the Manual modes.

表 7-159 lists the A_DELAY and G_DELAY values needed to calculate the correct values to be set in the CFG_x registers.

表 7-159. Manual Functions Mapping for PRU-ICSS1 PRU1 Direct Input mode

BALL	BALL NAME	PR1_PRU1_DIR_IN_MANUAL		CFG REGISTER	MUXMODE
		A_DELAY (ps)	G_DELAY (ps)		12
D3	vin2a_d10	0	1600	CFG_VIN2A_D10_IN	pr1_pru1_gpi7
F6	vin2a_d11	0	1000	CFG_VIN2A_D11_IN	pr1_pru1_gpi8
D5	vin2a_d12	0	1400	CFG_VIN2A_D12_IN	pr1_pru1_gpi9
C2	vin2a_d13	0	800	CFG_VIN2A_D13_IN	pr1_pru1_gpi10
C3	vin2a_d14	0	0	CFG_VIN2A_D14_IN	pr1_pru1_gpi11
C4	vin2a_d15	0	1600	CFG_VIN2A_D15_IN	pr1_pru1_gpi12
B2	vin2a_d16	0	1200	CFG_VIN2A_D16_IN	pr1_pru1_gpi13
D6	vin2a_d17	0	1500	CFG_VIN2A_D17_IN	pr1_pru1_gpi14
C5	vin2a_d18	0	1000	CFG_VIN2A_D18_IN	pr1_pru1_gpi15
A3	vin2a_d19	0	1100	CFG_VIN2A_D19_IN	pr1_pru1_gpi16
B3	vin2a_d20	0	700	CFG_VIN2A_D20_IN	pr1_pru1_gpi17
B4	vin2a_d21	0	1300	CFG_VIN2A_D21_IN	pr1_pru1_gpi18
B5	vin2a_d22	0	1400	CFG_VIN2A_D22_IN	pr1_pru1_gpi19
A4	vin2a_d23	0	1300	CFG_VIN2A_D23_IN	pr1_pru1_gpi20
E2	vin2a_d3	0	2100	CFG_VIN2A_D3_IN	pr1_pru1_gpi0
D2	vin2a_d4	0	1000	CFG_VIN2A_D4_IN	pr1_pru1_gpi1
F4	vin2a_d5	0	1700	CFG_VIN2A_D5_IN	pr1_pru1_gpi2
C1	vin2a_d6	0	700	CFG_VIN2A_D6_IN	pr1_pru1_gpi3
E4	vin2a_d7	0	1300	CFG_VIN2A_D7_IN	pr1_pru1_gpi4
F5	vin2a_d8	0	1700	CFG_VIN2A_D8_IN	pr1_pru1_gpi5
E6	vin2a_d9	0	1600	CFG_VIN2A_D9_IN	pr1_pru1_gpi6

Manual IO Timings Modes must be used to ensure some IO timings for PRU-ICSS1 PRU0 Parallel Capture mode. See 表 7-2 *Modes Summary* for a list of IO timings requiring the use of Manual IO Timings Modes. See 表 7-160 *Manual Functions Mapping for PRU-ICSS1 PRU0 Parallel Capture mode* for a definition of the Manual modes.

表 7-160 lists the A_DELAY and G_DELAY values needed to calculate the correct values to be set in the CFG_x registers.

Copyright © 2015–2019, Texas Instruments Incorporated

表 7-160. Manual Functions Mapping for PRU-ICSS1 PRU0 Parallel Capture mode

BALL	BALL NAME	PR1_PRU0_PAR_CAP_MANUAL		CFG REGISTER	MUXMODE
		A_DELAY (ps)	G_DELAY (ps)		12
AG3	vin1a_d10	637	0	CFG_VIN1A_D10_IN	pr1_pru0_gpi7
AG5	vin1a_d11	419	0	CFG_VIN1A_D11_IN	pr1_pru0_gpi8
AF2	vin1a_d12	714	0	CFG_VIN1A_D12_IN	pr1_pru0_gpi9
AF6	vin1a_d13	405	0	CFG_VIN1A_D13_IN	pr1_pru0_gpi10
AF3	vin1a_d14	761	0	CFG_VIN1A_D14_IN	pr1_pru0_gpi11
AF4	vin1a_d15	714	0	CFG_VIN1A_D15_IN	pr1_pru0_gpi12
AF1	vin1a_d16	608	0	CFG_VIN1A_D16_IN	pr1_pru0_gpi13
AE3	vin1a_d17	733	0	CFG_VIN1A_D17_IN	pr1_pru0_gpi14
AE5	vin1a_d18	743	0	CFG_VIN1A_D18_IN	pr1_pru0_gpi15
AE1	vin1a_d19	0	166	CFG_VIN1A_D19_IN	pr1_pru0_gpi16
AH6	vin1a_d3	435	0	CFG_VIN1A_D3_IN	pr1_pru0_gpi0
AH3	vin1a_d4	449	0	CFG_VIN1A_D4_IN	pr1_pru0_gpi1
AH5	vin1a_d5	501	0	CFG_VIN1A_D5_IN	pr1_pru0_gpi2
AG6	vin1a_d6	362	0	CFG_VIN1A_D6_IN	pr1_pru0_gpi3
AH4	vin1a_d7	382	0	CFG_VIN1A_D7_IN	pr1_pru0_gpi4
AG4	vin1a_d8	488	0	CFG_VIN1A_D8_IN	pr1_pru0_gpi5
AG2	vin1a_d9	649	0	CFG_VIN1A_D9_IN	pr1_pru0_gpi6

Manual IO Timings Modes must be used to ensure some IO timings for PRU-ICSS1 PRU1 Parallel Capture mode. See 表 7-2 *Modes Summary* for a list of IO timings requiring the use of Manual IO Timings Modes. See 表 7-161 *Manual Functions Mapping for PRU-ICSS1 PRU1 Parallel Capture mode* for a definition of the Manual modes.

表 7-161 lists the A_DELAY and G_DELAY values needed to calculate the correct values to be set in the CFG_x registers.

表 7-161. Manual Functions Mapping for PRU-ICSS1 PRU1 Parallel Capture mode

BALL	BALL NAME	PR1_PRU1_PAR_CAP_MANUAL		CFG REGISTER	MUXMODE
		A_DELAY (ps)	G_DELAY (ps)		12
D3	vin2a_d10	2693	441	CFG_VIN2A_D10_IN	pr1_pru1_gpi7
F6	vin2a_d11	2580	0	CFG_VIN2A_D11_IN	pr1_pru1_gpi8
D5	vin2a_d12	2531	348	CFG_VIN2A_D12_IN	pr1_pru1_gpi9
C2	vin2a_d13	2409	0	CFG_VIN2A_D13_IN	pr1_pru1_gpi10
C3	vin2a_d14	1792	0	CFG_VIN2A_D14_IN	pr1_pru1_gpi11
C4	vin2a_d15	2644	121	CFG_VIN2A_D15_IN	pr1_pru1_gpi12
B2	vin2a_d16	2478	146	CFG_VIN2A_D16_IN	pr1_pru1_gpi13
D6	vin2a_d17	2542	350	CFG_VIN2A_D17_IN	pr1_pru1_gpi14
C5	vin2a_d18	2728	64	CFG_VIN2A_D18_IN	pr1_pru1_gpi15
A3	vin2a_d19	0	0	CFG_VIN2A_D19_IN	pr1_pru1_gpi16
E2	vin2a_d3	2908	562	CFG_VIN2A_D3_IN	pr1_pru1_gpi0
D2	vin2a_d4	2684	0	CFG_VIN2A_D4_IN	pr1_pru1_gpi1
F4	vin2a_d5	2904	234	CFG_VIN2A_D5_IN	pr1_pru1_gpi2
C1	vin2a_d6	2488	0	CFG_VIN2A_D6_IN	pr1_pru1_gpi3
E4	vin2a_d7	2600	124	CFG_VIN2A_D7_IN	pr1_pru1_gpi4
F5	vin2a_d8	2590	547	CFG_VIN2A_D8_IN	pr1_pru1_gpi5
E6	vin2a_d9	2690	248	CFG_VIN2A_D9_IN	pr1_pru1_gpi6

Manual IO Timings Modes must be used to ensure some IO timings for PRU-ICSS2 PRU0 IOSET1 Direct Input mode. See 表 7-2 *Modes Summary* for a list of IO timings requiring the use of Manual IO Timings Modes. See 表 7-162 *Manual Functions Mapping for PRU-ICSS2 PRU0 IOSET1 Direct Input mode* for a definition of the Manual modes.

表 7-162 lists the A_DELAY and G_DELAY values needed to calculate the correct values to be set in the CFG_x registers.

表 7-162. Manual Functions Mapping for PRU-ICSS2 PRU0 IOSET1 Direct Input mode

BALL	BALL NAME	PR2_PRU0_DIR_IN_MANUAL1		CFG REGISTER	MUXMODE
		A_DELAY (ps)	G_DELAY (ps)		12
D7	vout1_d10	0	0	CFG_VOUT1_D10_IN	pr2_pru0_gpi7
D8	vout1_d11	0	756	CFG_VOUT1_D11_IN	pr2_pru0_gpi8
A5	vout1_d12	0	531	CFG_VOUT1_D12_IN	pr2_pru0_gpi9
C6	vout1_d13	0	180	CFG_VOUT1_D13_IN	pr2_pru0_gpi10
C8	vout1_d14	0	334	CFG_VOUT1_D14_IN	pr2_pru0_gpi11
C7	vout1_d15	0	1361	CFG_VOUT1_D15_IN	pr2_pru0_gpi12
B7	vout1_d16	0	488	CFG_VOUT1_D16_IN	pr2_pru0_gpi13
B8	vout1_d17	0	321	CFG_VOUT1_D17_IN	pr2_pru0_gpi14
A7	vout1_d18	0	254	CFG_VOUT1_D18_IN	pr2_pru0_gpi15
A8	vout1_d19	0	500	CFG_VOUT1_D19_IN	pr2_pru0_gpi16
C9	vout1_d20	0	716	CFG_VOUT1_D20_IN	pr2_pru0_gpi17
A9	vout1_d21	0	0	CFG_VOUT1_D21_IN	pr2_pru0_gpi18
B9	vout1_d22	0	404	CFG_VOUT1_D22_IN	pr2_pru0_gpi19
A10	vout1_d23	0	290	CFG_VOUT1_D23_IN	pr2_pru0_gpi20
G11	vout1_d3	0	226	CFG_VOUT1_D3_IN	pr2_pru0_gpi0
E9	vout1_d4	0	0	CFG_VOUT1_D4_IN	pr2_pru0_gpi1
F9	vout1_d5	0	365	CFG_VOUT1_D5_IN	pr2_pru0_gpi2
F8	vout1_d6	0	0	CFG_VOUT1_D6_IN	pr2_pru0_gpi3
E7	vout1_d7	0	218	CFG_VOUT1_D7_IN	pr2_pru0_gpi4
E8	vout1_d8	0	186	CFG_VOUT1_D8_IN	pr2_pru0_gpi5
D9	vout1_d9	0	308	CFG_VOUT1_D9_IN	pr2_pru0_gpi6

Manual IO Timings Modes must be used to ensure some IO timings for PRU-ICSS2 PRU0 IOSET2 Direct Input mode. See 表 7-2 *Modes Summary* for a list of IO timings requiring the use of Manual IO Timings Modes. See 表 7-163 *Manual Functions Mapping for PRU-ICSS2 PRU0 IOSET2 Direct Input mode* for a definition of the Manual modes.

表 7-163 lists the A_DELAY and G_DELAY values needed to calculate the correct values to be set in the CFG_x registers.

表 7-163. Manual Functions Mapping for PRU-ICSS2 PRU0 IOSET2 Direct Input mode

BALL	BALL NAME	PR2_PRU0_DIR_IN_MANUAL2		CFG REGISTER	MUXMODE
		A_DELAY (ps)	G_DELAY (ps)		12
AC5	gpio6_10	1000	3900	CFG_GPIO6_10_IN	pr2_pru0_gpi0
AB4	gpio6_11	1000	4500	CFG_GPIO6_11_IN	pr2_pru0_gpi1
F14	mcasp1_axr15	0	1800	CFG_MCASP1_AXR15_IN	pr2_pru0_gpi20
A19	mcasp2_aclkx	0	700	CFG_MCASP2_ACLKX_IN	pr2_pru0_gpi18
C15	mcasp2_axr2	0	1700	CFG_MCASP2_AXR2_IN	pr2_pru0_gpi16
A16	mcasp2_axr3	0	1800	CFG_MCASP2_AXR3_IN	pr2_pru0_gpi17
A18	mcasp2_fsx	0	1100	CFG_MCASP2_FSX_IN	pr2_pru0_gpi19
B19	mcasp3_axr0	0	1100	CFG_MCASP3_AXR0_IN	pr2_pru0_gpi14

Copyright © 2015–2019, Texas Instruments Incorporated

表 7-163. Manual Functions Mapping for PRU-ICSS2 PRU0 IOSET2 Direct Input mode (continued)

BALL	BALL NAME	PR2_PRU0_DIR_IN_MANUAL2		CFG REGISTER	MUXMODE
		A_DELAY (ps)	G_DELAY (ps)		12
C17	mcasp3_axr1	0	1200	CFG_MCASP3_AXR1_IN	pr2_pru0_gpi15
F15	mcasp3_fsx	0	1400	CFG_MCASP3_FSX_IN	pr2_pru0_gpi13
AD4	mmc3_clk	1000	4500	CFG_MMC3_CLK_IN	pr2_pru0_gpi2
AC4	mmc3_cmd	1000	4000	CFG_MMC3_CMD_IN	pr2_pru0_gpi3
AC7	mmc3_dat0	1000	4200	CFG_MMC3_DAT0_IN	pr2_pru0_gpi4
AC6	mmc3_dat1	1000	3800	CFG_MMC3_DAT1_IN	pr2_pru0_gpi5
AC9	mmc3_dat2	1000	3800	CFG_MMC3_DAT2_IN	pr2_pru0_gpi6
AC3	mmc3_dat3	1000	4400	CFG_MMC3_DAT3_IN	pr2_pru0_gpi7
AC8	mmc3_dat4	1000	4100	CFG_MMC3_DAT4_IN	pr2_pru0_gpi8
AD6	mmc3_dat5	1000	4000	CFG_MMC3_DAT5_IN	pr2_pru0_gpi9
AB8	mmc3_dat6	1000	3900	CFG_MMC3_DAT6_IN	pr2_pru0_gpi10
AB5	mmc3_dat7	1000	3500	CFG_MMC3_DAT7_IN	pr2_pru0_gpi11
B18	mcasp3_aclkx	0	0	CFG_MCASP3_ACLKX_IN	pr2_pru0_gpi12

Manual IO Timings Modes must be used to ensure some IO timings for PRU-ICSS2 PRU0 IOSET1 Direct Output mode. See 表 7-2 *Modes Summary* for a list of IO timings requiring the use of Manual IO Timings Modes. See 表 7-164 *Manual Functions Mapping for PRU-ICSS2 PRU0 IOSET1 Direct Output mode* for a definition of the Manual modes.

表 7-164 lists the A_DELAY and G_DELAY values needed to calculate the correct values to be set in the CFG_x registers.

表 7-164. Manual Functions Mapping for PRU-ICSS2 PRU0 IOSET1 Direct Output mode

BALL	BALL NAME	PR2_PRU0_DIR_OUT_MANUAL1		CFG REGISTER	MUXMODE
		A_DELAY (ps)	G_DELAY (ps)		13
D7	vout1_d10	0	0	CFG_VOUT1_D10_OUT	pr2_pru0_gpo7
D8	vout1_d11	0	200	CFG_VOUT1_D11_OUT	pr2_pru0_gpo8
A5	vout1_d12	0	2300	CFG_VOUT1_D12_OUT	pr2_pru0_gpo9
C6	vout1_d13	0	450	CFG_VOUT1_D13_OUT	pr2_pru0_gpo10
C8	vout1_d14	0	600	CFG_VOUT1_D14_OUT	pr2_pru0_gpo11
C7	vout1_d15	0	500	CFG_VOUT1_D15_OUT	pr2_pru0_gpo12
B7	vout1_d16	0	100	CFG_VOUT1_D16_OUT	pr2_pru0_gpo13
B8	vout1_d17	0	300	CFG_VOUT1_D17_OUT	pr2_pru0_gpo14
A7	vout1_d18	0	700	CFG_VOUT1_D18_OUT	pr2_pru0_gpo15
A8	vout1_d19	0	700	CFG_VOUT1_D19_OUT	pr2_pru0_gpo16
C9	vout1_d20	0	900	CFG_VOUT1_D20_OUT	pr2_pru0_gpo17
A9	vout1_d21	0	900	CFG_VOUT1_D21_OUT	pr2_pru0_gpo18
B9	vout1_d22	0	300	CFG_VOUT1_D22_OUT	pr2_pru0_gpo19
A10	vout1_d23	0	300	CFG_VOUT1_D23_OUT	pr2_pru0_gpo20
G11	vout1_d3	0	1300	CFG_VOUT1_D3_OUT	pr2_pru0_gpo0
E9	vout1_d4	0	2500	CFG_VOUT1_D4_OUT	pr2_pru0_gpo1
F9	vout1_d5	0	950	CFG_VOUT1_D5_OUT	pr2_pru0_gpo2
F8	vout1_d6	0	800	CFG_VOUT1_D6_OUT	pr2_pru0_gpo3
E7	vout1_d7	0	600	CFG_VOUT1_D7_OUT	pr2_pru0_gpo4
E8	vout1_d8	0	500	CFG_VOUT1_D8_OUT	pr2_pru0_gpo5
D9	vout1_d9	0	500	CFG_VOUT1_D9_OUT	pr2_pru0_gpo6

Copyright © 2015–2019, Texas Instruments Incorporated

Manual IO Timings Modes must be used to ensure some IO timings for PRU-ICSS2 PRU0 IOSET2 Direct Output mode. See 表 7-2 *Modes Summary* for a list of IO timings requiring the use of Manual IO Timings Modes. See 表 7-165 *Manual Functions Mapping for PRU-ICSS2 PRU0 IOSET2 Direct Output mode* for a definition of the Manual modes.

表 7-165 lists the A_DELAY and G_DELAY values needed to calculate the correct values to be set in the CFG_x registers.

表 7-165. Manual Functions Mapping for PRU-ICSS2 PRU0 IOSET2 Direct Output mode

BALL	BALL NAME	PR2_PRU0_DIR_OUT_MANUAL2		CFG REGISTER	MUXMODE
		A_DELAY (ps)	G_DELAY (ps)		13
AC5	gpio6_10	1000	4100	CFG_GPIO6_10_OUT	pr2_pru0_gpo0
AB4	gpio6_11	1000	4700	CFG_GPIO6_11_OUT	pr2_pru0_gpo1
F14	mcasp1_axr15	0	1600	CFG_MCASP1_AXR15_OUT	pr2_pru0_gpo20
A19	mcasp2_aclkx	0	2600	CFG_MCASP2_ACLKX_OUT	pr2_pru0_gpo18
C15	mcasp2_axr2	0	1800	CFG_MCASP2_AXR2_OUT	pr2_pru0_gpo16
A16	mcasp2_axr3	0	1200	CFG_MCASP2_AXR3_OUT	pr2_pru0_gpo17
A18	mcasp2_fsx	0	0	CFG_MCASP2_FSX_OUT	pr2_pru0_gpo19
B18	mcasp3_aclkx	0	2300	CFG_MCASP3_ACLKX_OUT	pr2_pru0_gpo12
B19	mcasp3_axr0	0	300	CFG_MCASP3_AXR0_OUT	pr2_pru0_gpo14
C17	mcasp3_axr1	0	600	CFG_MCASP3_AXR1_OUT	pr2_pru0_gpo15
F15	mcasp3_fsx	0	500	CFG_MCASP3_FSX_OUT	pr2_pru0_gpo13
AD4	mmc3_clk	1000	4400	CFG_MMC3_CLK_OUT	pr2_pru0_gpo2
AC4	mmc3_cmd	1000	4300	CFG_MMC3_CMD_OUT	pr2_pru0_gpo3
AC7	mmc3_dat0	1000	3400	CFG_MMC3_DAT0_OUT	pr2_pru0_gpo4
AC6	mmc3_dat1	1000	3600	CFG_MMC3_DAT1_OUT	pr2_pru0_gpo5
AC9	mmc3_dat2	1000	3400	CFG_MMC3_DAT2_OUT	pr2_pru0_gpo6
AC3	mmc3_dat3	1000	3300	CFG_MMC3_DAT3_OUT	pr2_pru0_gpo7
AC8	mmc3_dat4	1000	4300	CFG_MMC3_DAT4_OUT	pr2_pru0_gpo8
AD6	mmc3_dat5	1000	4800	CFG_MMC3_DAT5_OUT	pr2_pru0_gpo9
AB8	mmc3_dat6	1000	3900	CFG_MMC3_DAT6_OUT	pr2_pru0_gpo10
AB5	mmc3_dat7	1000	4000	CFG_MMC3_DAT7_OUT	pr2_pru0_gpo11

Manual IO Timings Modes must be used to ensure some IO timings for PRU-ICSS2 PRU1 IOSET1 Direct Input mode. See 表 7-2 *Modes Summary* for a list of IO timings requiring the use of Manual IO Timings Modes. See 表 7-166 *Manual Functions Mapping for PRU-ICSS2 PRU1 IOSET1 Direct Input mode* for a definition of the Manual modes.

表 7-166 lists the A_DELAY and G_DELAY values needed to calculate the correct values to be set in the CFG_x registers.

表 7-166. Manual Functions Mapping for PRU-ICSS2 PRU1 IOSET1 Direct Input mode

BALL	BALL NAME	PR2_PRU1_DIR_IN_MANUAL1		CFG REGISTER	MUXMODE
		A_DELAY (ps)	G_DELAY (ps)		12
U3	RMII_MHZ_50_CLK	0	2100	CFG_RMII_MHZ_50_CLK_IN	pr2_pru1_gpi2
U4	mdio_d	0	3200	CFG_MDIO_D_IN	pr2_pru1_gpi1
V1	mdio_mclk	0	2422	CFG_MDIO_MCLK_IN	pr2_pru1_gpi0
U5	rgmii0_rxc	0	1904	CFG_RGMII0_RXC_IN	pr2_pru1_gpi11
V5	rgmii0_rxctl	0	3629	CFG_RGMII0_RXCTL_IN	pr2_pru1_gpi12
W2	rgmii0_rxd0	0	2800	CFG_RGMII0_RXD0_IN	pr2_pru1_gpi16
Y2	rgmii0_rxd1	0	3100	CFG_RGMII0_RXD1_IN	pr2_pru1_gpi15

Copyright © 2015–2019, Texas Instruments Incorporated

表 7-166. Manual Functions Mapping for PRU-ICSS2 PRU1 IOSET1 Direct Input mode (continued)

BALL	BALL NAME	PR2_PRU1_DIR_IN_MANUAL1		CFG REGISTER	MUXMODE
		A_DELAY (ps)	G_DELAY (ps)		12
V3	rgmii0_rxd2	0	2900	CFG_RGMII0_RXD2_IN	pr2_pru1_gpi14
V4	rgmii0_rxd3	0	3363	CFG_RGMII0_RXD3_IN	pr2_pru1_gpi13
W9	rgmii0_txc	0	2488	CFG_RGMII0_TXC_IN	pr2_pru1_gpi5
V9	rgmii0_txctl	0	2263	CFG_RGMII0_TXCTL_IN	pr2_pru1_gpi6
U6	rgmii0_txd0	0	2292	CFG_RGMII0_TXD0_IN	pr2_pru1_gpi10
V6	rgmii0_txd1	0	2900	CFG_RGMII0_TXD1_IN	pr2_pru1_gpi9
U7	rgmii0_txd2	0	2800	CFG_RGMII0_TXD2_IN	pr2_pru1_gpi8
V7	rgmii0_txd3	0	2400	CFG_RGMII0_TXD3_IN	pr2_pru1_gpi7
V2	uart3_rxd	0	1900	CFG_UART3_RXD_IN	pr2_pru1_gpi3
Y1	uart3_txd	0	1900	CFG_UART3_TXD_IN	pr2_pru1_gpi4
E11	vout1_vsync	0	0	CFG_VOUT1_VSYNC_IN	pr2_pru1_gpi17
F11	vout1_d0	0	1020	CFG_VOUT1_D0_IN	pr2_pru1_gpi18
G10	vout1_d1	0	976	CFG_VOUT1_D1_IN	pr2_pru1_gpi19
F10	vout1_d2	0	946	CFG_VOUT1_D2_IN	pr2_pru1_gpi20

Manual IO Timings Modes must be used to ensure some IO timings for PRU-ICSS2 PRU1 IOSET2 Direct Input mode. See 表 7-2 *Modes Summary* for a list of IO timings requiring the use of Manual IO Timings Modes. See 表 7-167 *Manual Functions Mapping for PRU-ICSS2 PRU1 IOSET2 Direct Input mode* for a definition of the Manual modes.

表 7-167 lists the A_DELAY and G_DELAY values needed to calculate the correct values to be set in the CFG_x registers.

表 7-167. Manual Functions Mapping for PRU-ICSS2 PRU1 IOSET2 Direct Input mode

BALL	BALL NAME	PR2_PRU1_DIR_IN_MANUAL2		CFG REGISTER	MUXMODE
		A_DELAY (ps)	G_DELAY (ps)		12
C14	mcasp1_aclkx	0	700	CFG_MCASP1_ACLKX_IN	pr2_pru1_gpi7
G12	mcasp1_axr0	0	2100	CFG_MCASP1_AXR0_IN	pr2_pru1_gpi8
F12	mcasp1_axr1	0	1250	CFG_MCASP1_AXR1_IN	pr2_pru1_gpi9
B13	mcasp1_axr10	0	1800	CFG_MCASP1_AXR10_IN	pr2_pru1_gpi12
A12	mcasp1_axr11	0	1700	CFG_MCASP1_AXR11_IN	pr2_pru1_gpi13
E14	mcasp1_axr12	0	1000	CFG_MCASP1_AXR12_IN	pr2_pru1_gpi14
A13	mcasp1_axr13	0	1300	CFG_MCASP1_AXR13_IN	pr2_pru1_gpi15
G14	mcasp1_axr14	0	1200	CFG_MCASP1_AXR14_IN	pr2_pru1_gpi16
E11	vout1_vsync	0	0	CFG_VOUT1_VSYNC_IN	pr2_pru1_gpi17
F11	vout1_d0	0	0	CFG_VOUT1_D0_IN	pr2_pru1_gpi18
G10	vout1_d1	0	0	CFG_VOUT1_D1_IN	pr2_pru1_gpi19
F10	vout1_d2	0	0	CFG_VOUT1_D2_IN	pr2_pru1_gpi20
B12	mcasp1_axr8	0	1450	CFG_MCASP1_AXR8_IN	pr2_pru1_gpi10
A11	mcasp1_axr9	0	1600	CFG_MCASP1_AXR9_IN	pr2_pru1_gpi11
D17	mcasp4_axr1	0	1200	CFG_MCASP4_AXR1_IN	pr2_pru1_gpi0
AA3	mcasp5_aclkx	800	4100	CFG_MCASP5_ACLKX_IN	pr2_pru1_gpi1
AB3	mcasp5_axr0	900	4100	CFG_MCASP5_AXR0_IN	pr2_pru1_gpi3
AA4	mcasp5_axr1	1000	4100	CFG_MCASP5_AXR1_IN	pr2_pru1_gpi4
AB9	mcasp5_fsx	800	3800	CFG_MCASP5_FSX_IN	pr2_pru1_gpi2
D18	xref_clk0	0	0	CFG_XREF_CLK0_IN	pr2_pru1_gpi5
E17	xref_clk1	0	400	CFG_XREF_CLK1_IN	pr2_pru1_gpi6

Copyright © 2015–2019, Texas Instruments Incorporated

Manual IO Timings Modes must be used to ensure some IO timings for PRU-ICSS2 PRU1 IOSET1 Direct Output mode. See 表 7-2 *Modes Summary* for a list of IO timings requiring the use of Manual IO Timings Modes. See 表 7-168 *Manual Functions Mapping for PRU-ICSS2 PRU1 IOSET1 Direct Output mode* for a definition of the Manual modes.

表 7-168 lists the A_DELAY and G_DELAY values needed to calculate the correct values to be set in the CFG_x registers.

表 7-168. Manual Functions Mapping for PRU-ICSS2 PRU1 IOSET1 Direct Output mode

BALL	BALL NAME	PR2_PRU1_DIR_OUT_MANUAL1		CFG REGISTER	MUXMODE
		A_DELAY (ps)	G_DELAY (ps)		13
U3	RMII_MHZ_50_CLK	0	2500	CFG_RMII_MHZ_50_CLK_OUT	pr2_pru1_gpo2
U4	mdio_d	0	3900	CFG_MDIO_D_OUT	pr2_pru1_gpo1
V1	mdio_mclk	0	3200	CFG_MDIO_MCLK_OUT	pr2_pru1_gpo0
U5	rgmii0_rxc	0	2600	CFG_RGMII0_RXC_OUT	pr2_pru1_gpo11
V5	rgmii0_rxctl	0	2800	CFG_RGMII0_RXCTL_OUT	pr2_pru1_gpo12
W2	rgmii0_rxd0	0	2800	CFG_RGMII0_RXD0_OUT	pr2_pru1_gpo16
Y2	rgmii0_rxd1	0	2700	CFG_RGMII0_RXD1_OUT	pr2_pru1_gpo15
V3	rgmii0_rxd2	0	2600	CFG_RGMII0_RXD2_OUT	pr2_pru1_gpo14
V4	rgmii0_rxd3	0	2700	CFG_RGMII0_RXD3_OUT	pr2_pru1_gpo13
W9	rgmii0_txc	0	3300	CFG_RGMII0_TXC_OUT	pr2_pru1_gpo5
V9	rgmii0_txctl	0	2700	CFG_RGMII0_TXCTL_OUT	pr2_pru1_gpo6
U6	rgmii0_txd0	0	2900	CFG_RGMII0_TXD0_OUT	pr2_pru1_gpo10
V6	rgmii0_txd1	0	2500	CFG_RGMII0_TXD1_OUT	pr2_pru1_gpo9
U7	rgmii0_txd2	0	3000	CFG_RGMII0_TXD2_OUT	pr2_pru1_gpo8
V7	rgmii0_txd3	0	3200	CFG_RGMII0_TXD3_OUT	pr2_pru1_gpo7
V2	uart3_rxd	0	3400	CFG_UART3_RXD_OUT	pr2_pru1_gpo3
Y1	uart3_txd	0	3000	CFG_UART3_TXD_OUT	pr2_pru1_gpo4
F11	vout1_d0	0	600	CFG_VOUT1_D0_OUT	pr2_pru1_gpo18
G10	vout1_d1	0	0	CFG_VOUT1_D1_OUT	pr2_pru1_gpo19
F10	vout1_d2	0	300	CFG_VOUT1_D2_OUT	pr2_pru1_gpo20
E11	vout1_vsync	0	1200	CFG_VOUT1_VSYNC_OUT	pr2_pru1_gpo17

Manual IO Timings Modes must be used to ensure some IO timings for PRU-ICSS2 PRU1 IOSET2 Direct Output mode. See 表 7-2 *Modes Summary* for a list of IO timings requiring the use of Manual IO Timings Modes. See 表 7-169 *Manual Functions Mapping for PRU-ICSS2 PRU1 IOSET2 Direct Output mode* for a definition of the Manual modes.

表 7-169 lists the A_DELAY and G_DELAY values needed to calculate the correct values to be set in the CFG_x registers.

表 7-169. Manual Functions Mapping for PRU-ICSS2 PRU1 IOSET2 Direct Output mode

BALL	BALL NAME	PR2_PRU1_DIR_OUT_MANUAL2		CFG REGISTER	MUXMODE
		A_DELAY (ps)	G_DELAY (ps)		13
C14	mcasp1_aclkx	0	1800	CFG_MCASP1_ACLKX_OUT	pr2_pru1_gpo7
G12	mcasp1_axr0	0	800	CFG_MCASP1_AXR0_OUT	pr2_pru1_gpo8
F12	mcasp1_axr1	0	1400	CFG_MCASP1_AXR1_OUT	pr2_pru1_gpo9
B13	mcasp1_axr10	0	2300	CFG_MCASP1_AXR10_OUT	pr2_pru1_gpo12
A12	mcasp1_axr11	0	600	CFG_MCASP1_AXR11_OUT	pr2_pru1_gpo13
E14	mcasp1_axr12	0	700	CFG_MCASP1_AXR12_OUT	pr2_pru1_gpo14
A13	mcasp1_axr13	0	1500	CFG_MCASP1_AXR13_OUT	pr2_pru1_gpo15
G14	mcasp1_axr14	0	2000	CFG_MCASP1_AXR14_OUT	pr2_pru1_gpo16

Copyright © 2015–2019, Texas Instruments Incorporated

表 7-169. Manual Functions Mapping for PRU-ICSS2 PRU1 IOSET2 Direct Output mode (continued)

BALL	BALL NAME	PR2_PRU1_DIR_OUT_MANUAL2		CFG REGISTER	MUXMODE
		A_DELAY (ps)	G_DELAY (ps)		13
E11	vout1_vsync	0	0	CFG_VOUT1_VSYNC_OUT	pr2_pru1_gpo17
F11	vout1_d0	0	0	CFG_VOUT1_D0_OUT	pr2_pru1_gpo18
G10	vout1_d1	0	0	CFG_VOUT1_D1_OUT	pr2_pru1_gpo19
F10	vout1_d2	0	0	CFG_VOUT1_D2_OUT	pr2_pru1_gpo20
B12	mcasp1_axr8	0	2000	CFG_MCASP1_AXR8_OUT	pr2_pru1_gpo10
A11	mcasp1_axr9	0	800	CFG_MCASP1_AXR9_OUT	pr2_pru1_gpo11
D17	mcasp4_axr1	0	0	CFG_MCASP4_AXR1_OUT	pr2_pru1_gpo0
AA3	mcasp5_aclkx	1000	4200	CFG_MCASP5_ACLKX_OUT	pr2_pru1_gpo1
AB3	mcasp5_axr0	1000	3100	CFG_MCASP5_AXR0_OUT	pr2_pru1_gpo3
AA4	mcasp5_axr1	1000	2700	CFG_MCASP5_AXR1_OUT	pr2_pru1_gpo4
AB9	mcasp5_fsx	1000	2800	CFG_MCASP5_FSX_OUT	pr2_pru1_gpo2
D18	xref_clk0	0	1600	CFG_XREF_CLK0_OUT	pr2_pru1_gpo5
E17	xref_clk1	0	1500	CFG_XREF_CLK1_OUT	pr2_pru1_gpo6

Manual IO Timings Modes must be used to ensure some IO timings for PRU-ICSS2 PRU0 IOSET1 Parallel Capture mode. See 表 7-2 *Modes Summary* for a list of IO timings requiring the use of Manual IO Timings Modes. See 表 7-170 *Manual Functions Mapping for PRU-ICSS2 PRU0 IOSET1 Parallel Capture mode* for a definition of the Manual modes.

表 7-170 lists the A_DELAY and G_DELAY values needed to calculate the correct values to be set in the CFG_x registers.

表 7-170. Manual Functions Mapping for PRU-ICSS2 PRU0 IOSET1 Parallel Capture mode

BALL	BALL NAME	PR2_PRU0_PAR_CAP_MANUAL1		CFG REGISTER	MUXMODE
		A_DELAY (ps)	G_DELAY (ps)		12
D7	vout1_d10	1554	0	CFG_VOUT1_D10_IN	pr2_pru0_gpi7
D8	vout1_d11	1711	0	CFG_VOUT1_D11_IN	pr2_pru0_gpi8
A5	vout1_d12	1562	0	CFG_VOUT1_D12_IN	pr2_pru0_gpi9
C6	vout1_d13	1350	0	CFG_VOUT1_D13_IN	pr2_pru0_gpi10
C8	vout1_d14	1552	0	CFG_VOUT1_D14_IN	pr2_pru0_gpi11
C7	vout1_d15	1882	0	CFG_VOUT1_D15_IN	pr2_pru0_gpi12
B7	vout1_d16	1525	0	CFG_VOUT1_D16_IN	pr2_pru0_gpi13
B8	vout1_d17	1431	0	CFG_VOUT1_D17_IN	pr2_pru0_gpi14
A7	vout1_d18	1240	0	CFG_VOUT1_D18_IN	pr2_pru0_gpi15
A8	vout1_d19	0	0	CFG_VOUT1_D19_IN	pr2_pru0_gpi16
G11	vout1_d3	1231	0	CFG_VOUT1_D3_IN	pr2_pru0_gpi0
E9	vout1_d4	1355	0	CFG_VOUT1_D4_IN	pr2_pru0_gpi1
F9	vout1_d5	1261	0	CFG_VOUT1_D5_IN	pr2_pru0_gpi2
F8	vout1_d6	1016	0	CFG_VOUT1_D6_IN	pr2_pru0_gpi3
E7	vout1_d7	1297	0	CFG_VOUT1_D7_IN	pr2_pru0_gpi4
E8	vout1_d8	1390	0	CFG_VOUT1_D8_IN	pr2_pru0_gpi5
D9	vout1_d9	1685	0	CFG_VOUT1_D9_IN	pr2_pru0_gpi6

Copyright © 2015–2019, Texas Instruments Incorporated

Manual IO Timings Modes must be used to ensure some IO timings for PRU-ICSS2 PRU0 IOSET2 Parallel Capture mode. See 表 7-2 *Modes Summary* for a list of IO timings requiring the use of Manual IO Timings Modes. See 表 7-171 *Manual Functions Mapping for PRU-ICSS2 PRU0 IOSET2 Parallel Capture mode* for a definition of the Manual modes.

表 7-171 lists the A_DELAY and G_DELAY values needed to calculate the correct values to be set in the CFG_x registers.

表 7-171. Manual Functions Mapping for PRU-ICSS2 PRU0 IOSET2 Parallel Capture mode

BALL	BALL NAME	PR2_PRU0_PAR_CAP_MANUAL2		CFG REGISTER	MUXMODE
		A_DELAY (ps)	G_DELAY (ps)		12
AC5	gpio6_10	3800	1785	CFG_GPIO6_10_IN	pr2_pru0_gpi0
AB4	gpio6_11	3747	2246	CFG_GPIO6_11_IN	pr2_pru0_gpi1
C15	mcasp2_axr2	0	0	CFG_MCASP2_AXR2_IN	pr2_pru0_gpi16
B18	mcasp3_aclkx	271	0	CFG_MCASP3_ACLKX_IN	pr2_pru0_gpi12
B19	mcasp3_axr0	1215	0	CFG_MCASP3_AXR0_IN	pr2_pru0_gpi14
C17	mcasp3_axr1	1678	0	CFG_MCASP3_AXR1_IN	pr2_pru0_gpi15
F15	mcasp3_fsx	1862	0	CFG_MCASP3_FSX_IN	pr2_pru0_gpi13
AD4	mmc3_clk	3888	1913	CFG_MMC3_CLK_IN	pr2_pru0_gpi2
AC4	mmc3_cmd	3804	1690	CFG_MMC3_CMD_IN	pr2_pru0_gpi3
AC7	mmc3_dat0	3771	1681	CFG_MMC3_DAT0_IN	pr2_pru0_gpi4
AC6	mmc3_dat1	3689	1591	CFG_MMC3_DAT1_IN	pr2_pru0_gpi5
AC9	mmc3_dat2	3807	1441	CFG_MMC3_DAT2_IN	pr2_pru0_gpi6
AC3	mmc3_dat3	3680	2415	CFG_MMC3_DAT3_IN	pr2_pru0_gpi7
AC8	mmc3_dat4	3846	1455	CFG_MMC3_DAT4_IN	pr2_pru0_gpi8
AD6	mmc3_dat5	3747	1673	CFG_MMC3_DAT5_IN	pr2_pru0_gpi9
AB8	mmc3_dat6	3777	1557	CFG_MMC3_DAT6_IN	pr2_pru0_gpi10
AB5	mmc3_dat7	3775	1320	CFG_MMC3_DAT7_IN	pr2_pru0_gpi11

Manual IO Timings Modes must be used to ensure some IO timings for PRU-ICSS2 PRU1 IOSET1 Parallel Capture mode. See 表 7-2 *Modes Summary* for a list of IO timings requiring the use of Manual IO Timings Modes. See 表 7-172 *Manual Functions Mapping for PRU-ICSS2 PRU1 IOSET1 Parallel Capture mode* for a definition of the Manual modes.

表 7-171 lists the A_DELAY and G_DELAY values needed to calculate the correct values to be set in the CFG_x registers.

表 7-172. Manual Functions Mapping for PRU-ICSS2 PRU1 IOSET1 Parallel Capture mode

BALL	BALL NAME	PR2_PRU1_PAR_CAP_MANUAL1		CFG REGISTER	MUXMODE
		A_DELAY (ps)	G_DELAY (ps)		12
U3	RMII_MHZ_50_CLK	1234	0	CFG_RMII_MHZ_50_CLK_IN	pr2_pru1_gpi2
U4	mdio_d	1693	0	CFG_MDIO_D_IN	pr2_pru1_gpi1
V1	mdio_mclk	1045	0	CFG_MDIO_MCLK_IN	pr2_pru1_gpi0
U5	rgmii0_rxc	1028	0	CFG_RGMII0_RXC_IN	pr2_pru1_gpi11
V5	rgmii0_rxctl	1896	0	CFG_RGMII0_RXCTL_IN	pr2_pru1_gpi12
W2	rgmii0_rxd0	0	0	CFG_RGMII0_RXD0_IN	pr2_pru1_gpi16
Y2	rgmii0_rxd1	1659	0	CFG_RGMII0_RXD1_IN	pr2_pru1_gpi15
V3	rgmii0_rxd2	1448	0	CFG_RGMII0_RXD2_IN	pr2_pru1_gpi14
V4	rgmii0_rxd3	1762	0	CFG_RGMII0_RXD3_IN	pr2_pru1_gpi13
W9	rgmii0_txc	1384	0	CFG_RGMII0_TXC_IN	pr2_pru1_gpi5
V9	rgmii0_txctl	953	0	CFG_RGMII0_TXCTL_IN	pr2_pru1_gpi6
U6	rgmii0_txd0	1170	0	CFG_RGMII0_TXD0_IN	pr2_pru1_gpi10

Copyright © 2015–2019, Texas Instruments Incorporated

表 7-172. Manual Functions Mapping for PRU-ICSS2 PRU1 IOSET1 Parallel Capture mode (continued)

BALL	BALL NAME	PR2_PRU1_PAR_CAP_MANUAL1		CFG REGISTER	MUXMODE
		A_DELAY (ps)	G_DELAY (ps)		12
V6	rgmii0_txd1	1749	0	CFG_RGMII0_TXD1_IN	pr2_pru1_gpi9
U7	rgmii0_txd2	1410	0	CFG_RGMII0_TXD2_IN	pr2_pru1_gpi8
V7	rgmii0_txd3	1479	0	CFG_RGMII0_TXD3_IN	pr2_pru1_gpi7
V2	uart3_rxd	1124	0	CFG_UART3_RXD_IN	pr2_pru1_gpi3
Y1	uart3_txd	765	0	CFG_UART3_TXD_IN	pr2_pru1_gpi4

Manual IO Timings Modes must be used to ensure some IO timings for PRU-ICSS2 PRU1 IOSET2 Parallel Capture mode. See 表 7-2 *Modes Summary* for a list of IO timings requiring the use of Manual IO Timings Modes. See 表 7-173 *Manual Functions Mapping for PRU-ICSS2 PRU1 IOSET2 Parallel Capture mode* for a definition of the Manual modes.

表 7-173 lists the A_DELAY and G_DELAY values needed to calculate the correct values to be set in the CFG_x registers.

表 7-173. Manual Functions Mapping for PRU-ICSS2 PRU1 IOSET2 Parallel Capture mode

BALL	BALL NAME	PR2_PRU1_PAR_CAP_MANUAL2		CFG REGISTER	MUXMODE
		A_DELAY (ps)	G_DELAY (ps)		12
C14	mcasp1_aclkx	1959	0	CFG_MCASP1_ACLKX_IN	pr2_pru1_gpi7
G12	mcasp1_axr0	3142	0	CFG_MCASP1_AXR0_IN	pr2_pru1_gpi8
F12	mcasp1_axr1	2361	0	CFG_MCASP1_AXR1_IN	pr2_pru1_gpi9
B13	mcasp1_axr10	2488	0	CFG_MCASP1_AXR10_IN	pr2_pru1_gpi12
A12	mcasp1_axr11	2652	0	CFG_MCASP1_AXR11_IN	pr2_pru1_gpi13
E14	mcasp1_axr12	2036	0	CFG_MCASP1_AXR12_IN	pr2_pru1_gpi14
A13	mcasp1_axr13	2301	0	CFG_MCASP1_AXR13_IN	pr2_pru1_gpi15
G14	mcasp1_axr14	0	0	CFG_MCASP1_AXR14_IN	pr2_pru1_gpi16
B12	mcasp1_axr8	2581	0	CFG_MCASP1_AXR8_IN	pr2_pru1_gpi10
A11	mcasp1_axr9	2565	0	CFG_MCASP1_AXR9_IN	pr2_pru1_gpi11
D17	mcasp4_axr1	2580	0	CFG_MCASP4_AXR1_IN	pr2_pru1_gpi0
AA3	mcasp5_aclkx	3533	2482	CFG_MCASP5_ACLKX_IN	pr2_pru1_gpi1
AB3	mcasp5_axr0	3568	2725	CFG_MCASP5_AXR0_IN	pr2_pru1_gpi3
AA4	mcasp5_axr1	3679	2464	CFG_MCASP5_AXR1_IN	pr2_pru1_gpi4
AB9	mcasp5_fsx	3604	2091	CFG_MCASP5_FSX_IN	pr2_pru1_gpi2
D18	xref_clk0	851	0	CFG_XREF_CLK0_IN	pr2_pru1_gpi5
E17	xref_clk1	1966	0	CFG_XREF_CLK1_IN	pr2_pru1_gpi6

7.26 System and Miscellaneous interfaces

The Device includes the following System and Miscellaneous interfaces:

- Sysboot Interface
- System DMA Interface
- Interrupt Controllers (INTC) Interface
- Observability Signal (OBS) Interface

7.27 Test Interfaces

The Device includes the following Test interfaces:

- IEEE 1149.1 Standard-Test-Access Port (JTAG)
- Trace Port Interface Unit (TPIU)
- Advanced Event Triggering Interface (AET)

7.27.1 IEEE 1149.1 Standard-Test-Access Port (JTAG)

The JTAG (IEEE Standard 1149.1-1990 Standard-Test-Access Port and Boundary Scan Architecture) interface is used for BSDL testing and emulation of the device. The trstn pin only needs to be released when it is necessary to use a JTAG controller to debug the device or exercise the device's boundary scan functionality. For maximum reliability, the device includes an internal Pulldown (IPD) on the trstn pin to ensure that trstn is always asserted upon power up and the device's internal emulation logic is always properly initialized. JTAG controllers from Texas Instruments actively drive trstn high. However, some third-party JTAG controllers may not drive trstn high but expect the use of a pullup resistor on trstn. When using this type of JTAG controller, assert trstn to initialize the device after powerup and externally drive trstn high before attempting any emulation or boundary-scan operations.

The main JTAG features include:

- 32KB Embedded Trace Buffer (ETB™)
- 5-pin system trace interface for debug
- Supports Advanced Event Triggering (AET)
- All processors can be emulated via JTAG ports
- All functions on EMU pins of the device:
  - EMU[1:0] - cross-triggering, boot mode (WIR), STM trace
  - EMU[4:2] - STM trace only (single direction)

7.27.1.1 JTAG Electrical Data/Timing

表 7-174, 表 7-175 and 図 7-109 assume testing over the recommended operating conditions and electrical characteristic conditions below.

表 7-174. Timing Requirements for IEEE 1149.1 JTAG

NO.	PARAMETER	DESCRIPTION	MIN	MAX	UNIT
1	$t_{c(TCK)}$	Cycle time, TCK	62.29		ns
1a	$t_{w(TCKH)}$	Pulse duration, TCK high (40% of t_c)	24.92		ns
1b	$t_{w(TCKL)}$	Pulse duration, TCK low (40% of t_c)	24.92		ns
3	$t_{su(TDI-TCK)}$	Input setup time, TDI valid to TCK high	6.23		ns
	$t_{su(TMS-TCK)}$	Input setup time, TMS valid to TCK high	6.23		ns
4	$t_{h(TCK-TDI)}$	Input hold time, TDI valid from TCK high	31.15		ns
	$t_{h(TCK-TMS)}$	Input hold time, TMS valid from TCK high	31.15		ns

表 7-175. Switching Characteristics Over Recommended Operating Conditions for IEEE 1149.1 JTAG

NO.	PARAMETER	DESCRIPTION	MIN	MAX	UNIT
2	$t_{d(TCKL-TDOV)}$	Delay time, TCK low to TDO valid	0	30.5	ns

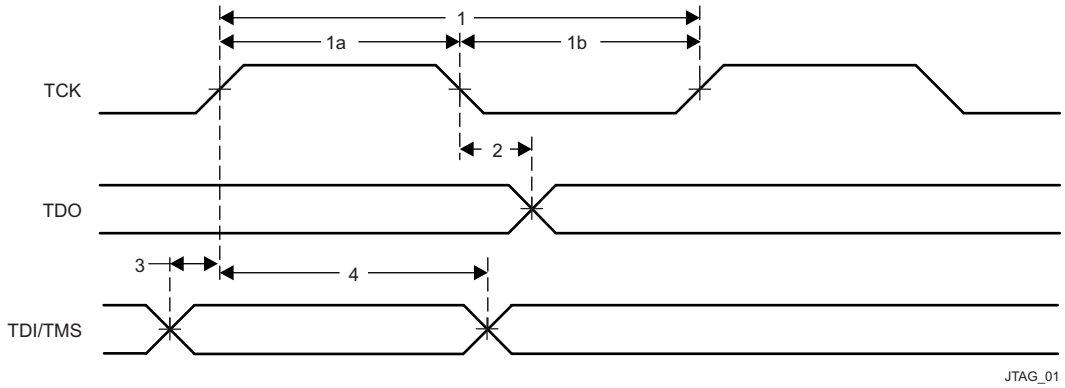

図 7-109. JTAG Timing

Copyright © 2015–2019, Texas Instruments Incorporated

表 7-176, 表 7-177 and 図 7-110 assume testing over the recommended operating conditions and electrical characteristic conditions below.

表 7-176. Timing Requirements for IEEE 1149.1 JTAG With RTCK

NO.	PARAMETER	DESCRIPTION	MIN	MAX	UNIT
1	$t_{c(TCK)}$	Cycle time, TCK	62.29		ns
1a	$t_{w(TCKH)}$	Pulse duration, TCK high (40% of t_c)	24.92		ns
1b	$t_{w(TCKL)}$	Pulse duration, TCK low (40% of t_c)	24.92		ns
3	$t_{su(TDI-TCK)}$	Input setup time, TDI valid to TCK high	6.23		ns
	$t_{su(TMS-TCK)}$	Input setup time, TMS valid to TCK high	6.23		ns
4	$t_{h(TCK-TDI)}$	Input hold time, TDI valid from TCK high	31.15		ns
	$t_{h(TCK-TMS)}$	Input hold time, TMS valid from TCK high	31.15		ns

表 7-177. Switching Characteristics Over Recommended Operating Conditions for IEEE 1149.1 JTAG With RTCK

NO.	PARAMETER	DESCRIPTION	MIN	MAX	UNIT
5	$t_{d(TCK-RTCK)}$	Delay time, TCK to RTCK with no selected subpaths (ICEPick is the only tap selected - when the Arm is in the scan chain, the delay time is a function of the Arm functional clock).	0	27	ns
6	$t_{c(RTCK)}$	Cycle time, RTCK	62.29		ns
7	$t_{w(RTCKH)}$	Pulse duration, RTCK high (40% of t_c)	24.92		ns
8	$t_{w(RTCKL)}$	Pulse duration, RTCK low (40% of t_c)	24.92		ns

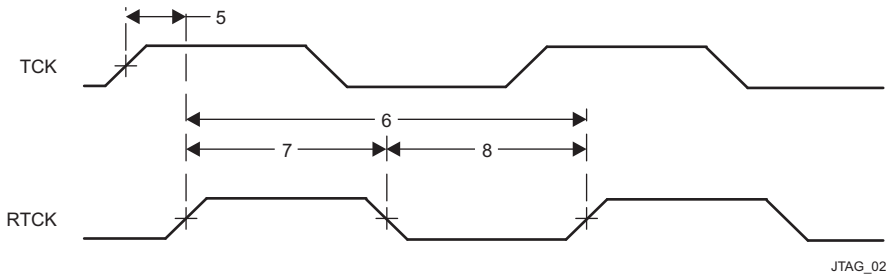

図 7-110. JTAG With RTCK Timing

7.27.2 Trace Port Interface Unit (TPIU)

> 注意
>
> The I/O timings provided in this section are valid only if signals within a single IOSET are used. The IOSETs are defined in 表 7-179.

7.27.2.1 TPIU PLL DDR Mode

表 7-178 and 図 7-111 assume testing over the recommended operating conditions and electrical characteristic conditions below.

表 7-178. Switching Characteristics for TPIU

NO.	PARAMETER	DESCRIPTION	MIN	MAX	UNIT
TPIU1	$t_{c(clk)}$	Cycle time, TRACECLK period	5.56		ns
TPIU4	$t_{d(clk-ctlV)}$	Skew time, TRACECLK transition to TRACECTL transition	-0.96	0.96	ns

表 7-178. Switching Characteristics for TPIU (continued)

NO.	PARAMETER	DESCRIPTION	MIN	MAX	UNIT
TPIU5	$t_{d(clk\text{-}dataV)}$	Skew time, TRACECLK transition to TRACEDATA[17:0]	-0.96	0.96	ns

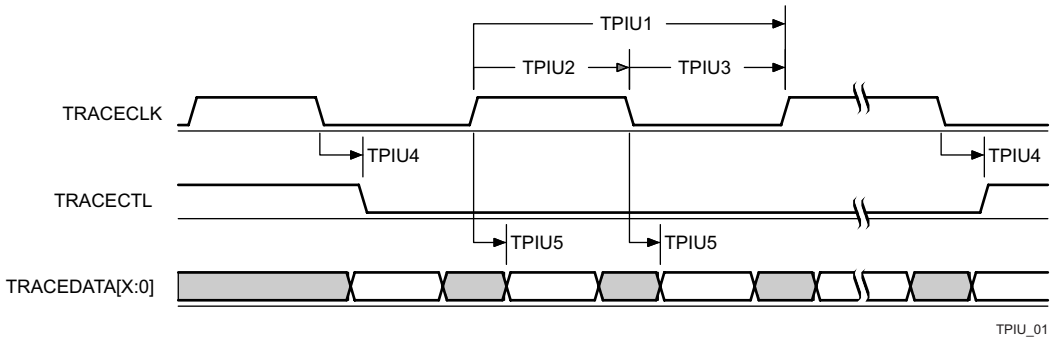

図 7-111. TPIU—PLL DDR Transmit Mode(1)

(1) In d[X:0], X is equal to 15 or 17.

In 表 7-179 are presented the specific groupings of signals (IOSET) for use with TPIU signals.

表 7-179. TPIU IOSETs

SIGNALS	IOSET1		IOSET2	
	BALL	MUX	BALL	MUX
emu0	G21	0	G21	0
emu1	D24	0	D24	0
emu2	F10	2	F10	2
emu3	D7	2	D7	2
emu4	A7	2	A7	2
emu5	E1	5	G11	2
emu6	G2	5	E9	2
emu7	H7	5	F9	2
emu8	G1	5	F8	2
emu9	G6	5	E7	2
emu10	F2	5	D8	2
emu11	F3	5	A5	2
emu12	D1	5	C6	2
emu13	E2	5	C8	2
emu14	D2	5	C7	2
emu15	F4	5	A8	2
emu16	C1	5	C9	2
emu17	E4	5	A9	2
emu18	F5	5	B9	2
emu19	E6	5	A10	2

Copyright © 2015–2019, Texas Instruments Incorporated

8 Applications, Implementation, and Layout

注: Information in the following applications sections is not part of the TI component specification, and TI does not warrant its accuracy or completeness. TI's customers are responsible for determining suitability of components for their purposes. Customers should validate and test design implementation to confirm system functionality.

8.1 Power Supply Mapping

TPS659037 is the Power Management IC (PMIC) that should be used for the Device designs. TI requires use of this PMIC for the following reasons:

- TI has validated its use with the Device
- Board level margins including transient response and output accuracy are analyzed and optimized for the entire system
- Support for power sequencing requirements (refer to 5.9 *Power Supply Sequences*)
- Support for Adaptive Voltage Scaling (AVS) Class 0 requirements, including TI provided software

Whenever we allow for combining of rails mapped on any of the SMPSes, the PDN guidelines that are the most stringent of the rails combined should be implemented for the particular supply rail.

It is possible that some voltage domains on the device are unused in some systems. In such cases, to ensure device reliability, it is still required that the supply pins for the specific voltage domains are connected to some core power supply output.

These unused supplies though can be combined with any of the core supplies that are used (active) in the system. e.g. if IVA and GPU domains are not used, they can be combined with the CORE domain, thereby having a single power supply driving the combined CORE, IVA and GPU domains.

For the combined rail, the following relaxations do apply:

- The AVS voltage of active rail in the combined rail needs to be used to set the power supply
- The decoupling capacitance should be set according to the active rail in the combined rail

表 8-1 illustrates the approved and validated power supply connections to the Device for the SMPS outputs of the TPS659037 PMIC.

表 8-1. TPS659037 Power Supply Connections[(1)]

TPS659037 Power Supply	Valid Combination 1	Valid Combination 2
SMPS1/2[(2)]	vdd_mpu	vdd_mpu
SMPS3	vdds_ddr1, vdds_ddr2	vdds_ddr1, vdds_ddr2
SMPS4/5	vdd_dspeve, vdd_gpu, vdd_iva	vdd_dspeve
SMPS6	vdd	vdd_gpu
SMPS7	SW configuration after boot	vdd
SMPS8	vdds18v	vdd_iva
SMPS9	SW configuration after boot 3.3V	vddshvx
LDO1	vddshv8	vddshv8
LDO2	vddshv5	vdds18v
LDO3	vdda_usb1, vdda_usb2, vdda_usb3, vdda_sata	vdda_usb1, vdda_usb2, vdda_usb3, vdda_sata
LDO4	vdda_hdmi, vdda_pcie, vdda_pcie0, vdda_pcie1	vdda_hdmi, vdda_pcie, vdda_pcie0, vdda_pcie1
LDO9	vdd_rtc	vdd_rtc
LDOLN	1.8V PLLs	1.8V PLLs
LDOUSB	vdda_usb3v3	vdda_usb3v3

(1) Power consumption is highly application-specific. Separate analysis must be performed to ensure output current ratings (average and peak) is within the limits of the PMIC for all rails of the device.

(2) Refer to the PMIC data manual for the latest TPS659037 specifications

(3) For more information on connectivity with the TPS659037 PMIC, see the TPS659037 User's Guide to Power AM572x (SLIU011).

(4) A product's maximum ambient temperature, thermal system design & heat spreading performance could limit the maximum power dissipation below the full PMIC capacity in order to not exceed recommended SoC max Tj

8.2 DDR3 Board Design and Layout Guidelines

8.2.1 DDR3 General Board Layout Guidelines

To help ensure good signaling performance, consider the following board design guidelines:

- Avoid crossing splits in the power plane.
- Minimize Vref noise.
- Use the widest trace that is practical between decoupling capacitors and memory module.
- Maintain a single reference.
- Minimize ISI by keeping impedances matched.
- Minimize crosstalk by isolating sensitive bits, such as strobes, and avoiding return path discontinuities.
- Use proper low-pass filtering on the Vref pins.
- Keep the stub length as short as possible.
- Add additional spacing for on-clock and strobe nets to eliminate crosstalk.
- Maintain a common ground reference for all bypass and decoupling capacitors.
- Take into account the differences in propagation delays between microstrip and stripline nets when evaluating timing constraints.

8.2.2 DDR3 Board Design and Layout Guidelines

8.2.2.1 Board Designs

TI only supports board designs using DDR3 memory that follow the guidelines in this document. The switching characteristics and timing diagram for the DDR3 memory controller are shown in 表 8-2 and 図 8-1.

表 8-2. Switching Characteristics Over Recommended Operating Conditions for DDR3 Memory Controller

NO.	PARAMETER		MIN	MAX	UNIT
1	$t_{c(DDR_CLK)}$	Cycle time, DDR_CLK	1.875	2.5[(1)]	ns

(1) This is the absolute maximum the clock period can be. Actual maximum clock period may be limited by DDR3 speed grade and operating frequency (see the DDR3 memory device data sheet).

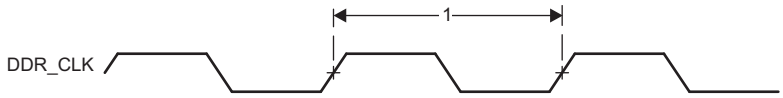

図 8-1. DDR3 Memory Controller Clock Timing

8.2.2.2 DDR3 EMIFs

The processor contains two separate DDR3 EMIFs. This specification covers one of these EMIFs (ddr1_*) and, thus, needs to be implemented twice, once for each EMIF. The PCB layout generally turns out to be a semi-mirror with ddr2_* being a flipped version of ddr1_*; the only exception being the DDR3 devices themselves are not flipped unless mounted on opposite sides of the PCB. Requirements are identical between the two EMIFs.

Copyright © 2015–2019, Texas Instruments Incorporated

8.2.2.3 DDR3 Device Combinations

Because there are several possible combinations of device counts and single- or dual-side mounting, 表 8-3 summarizes the supported device configurations.

表 8-3. Supported DDR3 Device Combinations(1)

NUMBER OF DDR3 DEVICES	DDR3 DATA DEVICE WIDTH (BITS)	MIRRORED?	DDR3 EMIF WIDTH (BITS)
1	16	N	16
2	8	Y(2)	16
2	16	N	32
2	16	Y(2)	32
3	16	N(4)	32
4	8	N	32
4	8	Y(3)	32
5	8	N(4)	32

(1) This table is per EMIF.

(2) Two DDR3 devices are mirrored when one device is placed on the top of the board and the second device is placed on the bottom of the board.

(3) This is two mirrored pairs of DDR3 devices.

(4) The DDR memory connected to the DDR ECC bus does NOT need to be the same part number as the DDR memories connected to the DDR data bus. However, some constraints do apply. When selecting a memory for the DDR ECC bus, the following restrictions must be adhered to as compared to the DDR memories on the data bus:

- Match the same DDR3 speed grade
- Have an equal number of internal banks
- Have an equal number of columns
- Have a greater or equal number of rows

8.2.2.4 DDR3 Interface Schematic

8.2.2.4.1 32-Bit DDR3 Interface

The DDR3 interface schematic varies, depending upon the width of the DDR3 devices used and the width of the bus used (16 or 32 bits). General connectivity is straightforward and very similar. 16-bit DDR devices look like two 8-bit devices. 図 8-2 and 図 8-3 show the schematic connections for 32-bit interfaces using x16 devices.

8.2.2.4.2 16-Bit DDR3 Interface

Note that the 16-bit wide interface schematic is practically identical to the 32-bit interface (see 図 8-2 and 図 8-3); only the high-word DDR memories are removed and the unused DQS inputs are tied off.

When not using all or part of a DDR interface, the proper method of handling the unused pins is to tie off the ddrx_dqs*i* pins to ground via a 1k-Ω resistor and to tie off the ddrx_dqsn*i* pins to the corresponding vdds_ddr*x* supply via a 1k-Ω resistor. This needs to be done for each byte not used. Although these signals have internal pullups and pulldowns, external pullups and pulldowns provide additional protection against external electrical noise causing activity on the signals.

The vdds_ddr*x* and ddrx_vref0 power supply pins need to be connected to their respective power supplies even if ddrx is not being used. All other DDR interface pins can be left unconnected. Note that the supported modes for use of the DDR EMIF are 32-bits wide, 16-bits wide, or not used.

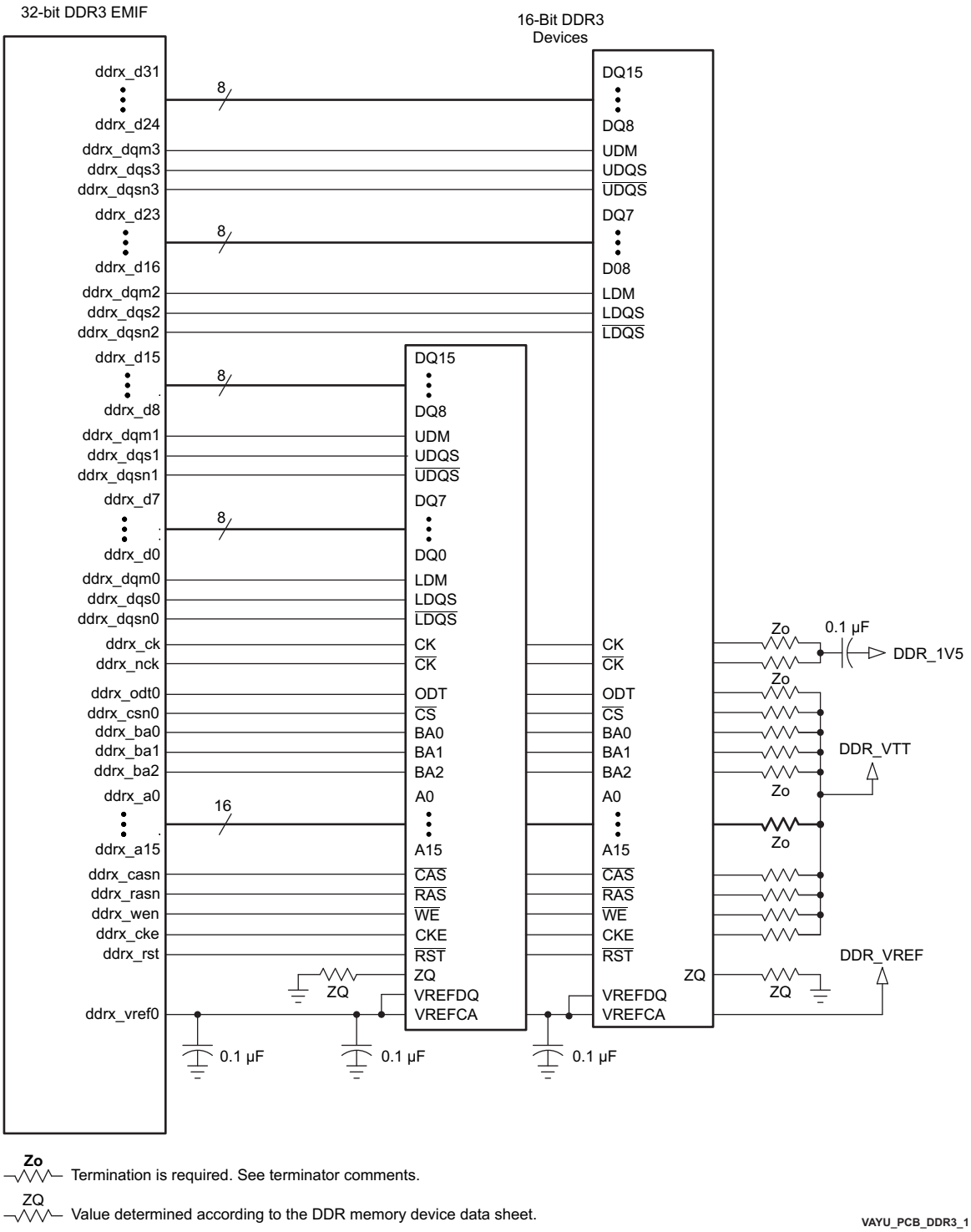

図 8-2. 32-Bit, One-Bank DDR3 Interface Schematic Using Two 16-Bit DDR3 Devices

Copyright © 2015–2019, Texas Instruments Incorporated

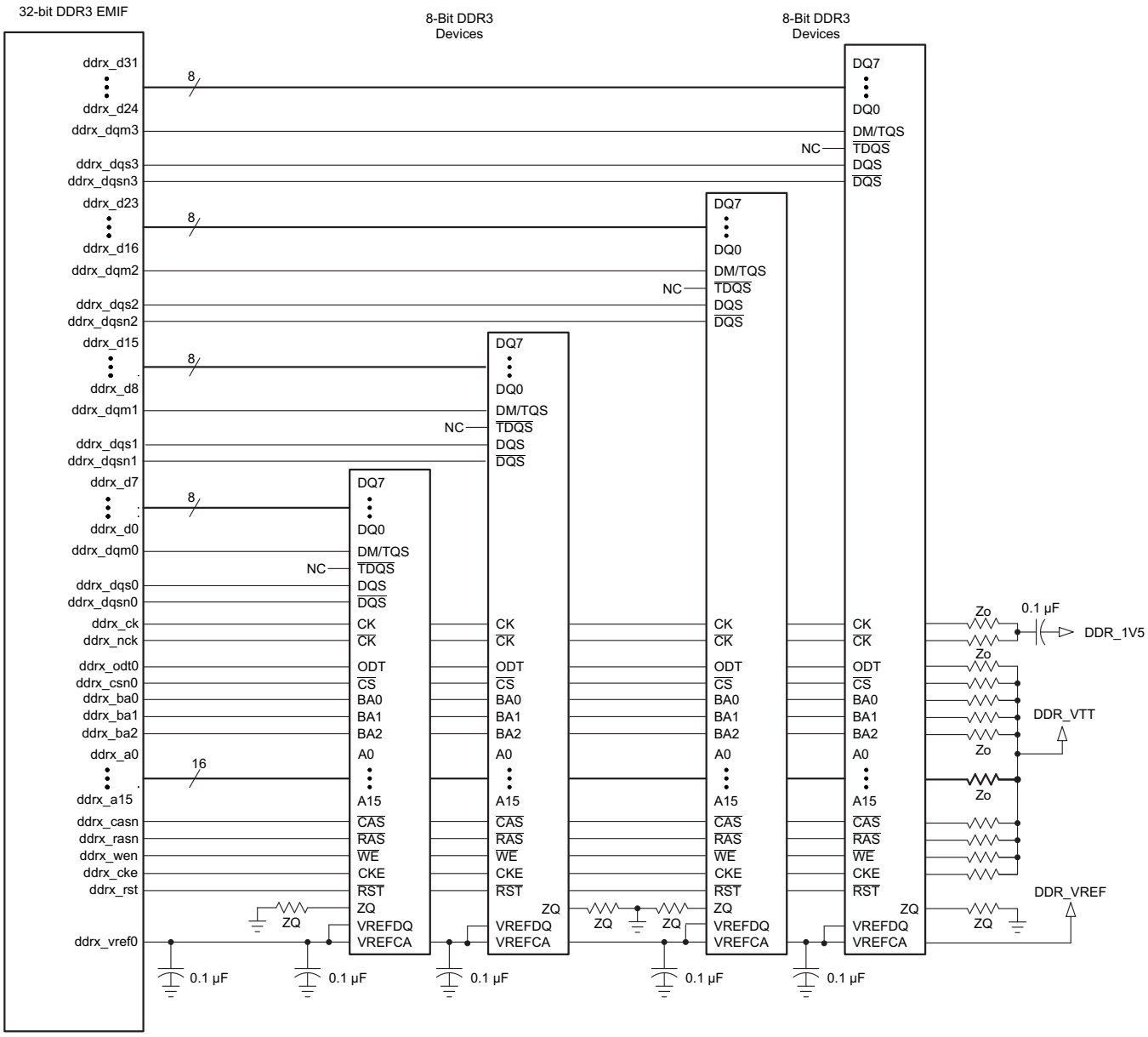

図 8-3. 32-Bit, One-Bank DDR3 Interface Schematic Using Four 8-Bit DDR3 Devices

8.2.2.5 Compatible JEDEC DDR3 Devices

表 8-4 shows the parameters of the JEDEC DDR3 devices that are compatible with this interface. Generally, the DDR3 interface is compatible with DDR3-1066 devices in the x8 or x16 widths.

表 8-4. Compatible JEDEC DDR3 Devices (Per Interface)

NO.	PARAMETER	CONDITION	MIN	MAX	UNIT
1	JEDEC DDR3 device speed grade(1)	DDR clock rate = 400MHz	DDR3-800	DDR3-1600	
		400MHz< DDR clock rate ≤ 533MHz	DDR3-1066	DDR3-1600	
2	JEDEC DDR3 device bit width		x8	x16	Bits
3	JEDEC DDR3 device count(2)		2	4	Devices

(1) Refer to 表 8-2 Switching Characteristics Over Recommended Operating Conditions for DDR3 Memory Controller for the range of supported DDR clock rates.

(2) For valid DDR3 device configurations and device counts, see 8.2.2.4, 図 8-2, and 図 8-3.

8.2.2.6 PCB Stackup

The minimum stackup for routing the DDR3 interface is a six-layer stack up as shown in 表 8-5. Additional layers may be added to the PCB stackup to accommodate other circuitry, enhance SI/EMI performance, or to reduce the size of the PCB footprint. Complete stackup specifications are provided in 表 8-6.

表 8-5. Six-Layer PCB Stackup Suggestion

LAYER	TYPE	DESCRIPTION
1	Signal	Top routing mostly vertical
2	Plane	Ground
3	Plane	Split power plane
4	Plane	Split power plane or Internal routing
5	Plane	Ground
6	Signal	Bottom routing mostly horizontal

Copyright © 2015–2019, Texas Instruments Incorporated

表 8-6. PCB Stackup Specifications

NO.	PARAMETER	MIN	TYP	MAX	UNIT
PS1	PCB routing/plane layers	6			
PS2	Signal routing layers	3			
PS3	Full ground reference layers under DDR3 routing region(1)	1			
PS4	Full 1.5-V power reference layers under the DDR3 routing region(1)	1			
PS5	Number of reference plane cuts allowed within DDR routing region(2)			0	
PS6	Number of layers between DDR3 routing layer and reference plane(3)			0	
PS7	PCB routing feature size		4		Mils
PS8	PCB trace width, w		4		Mils
PS9	Single-ended impedance, Zo	50		75	Ω
PS10	Impedance control(5)	Z-5	Z	Z+5	Ω

(1) Ground reference layers are preferred over power reference layers. Be sure to include bypass caps to accommodate reference layer return current as the trace routes switch routing layers.

(2) No traces should cross reference plane cuts within the DDR routing region. High-speed signal traces crossing reference plane cuts create large return current paths which can lead to excessive crosstalk and EMI radiation.

(3) Reference planes are to be directly adjacent to the signal plane to minimize the size of the return current loop.

(4) An 18-mil pad assumes Via Channel is the most economical BGA escape. A 20-mil pad may be used if additional layers are available for power routing. An 18-mil pad is required for minimum layer count escape.

(5) Z is the nominal singled-ended impedance selected for the PCB specified by PS9.

8.2.2.7 Placement

図 8-4 shows the required placement for the processor as well as the DDR3 devices. The dimensions for this figure are defined in 表 8-7. The placement does not restrict the side of the PCB on which the devices are mounted. The ultimate purpose of the placement is to limit the maximum trace lengths and allow for proper routing space. For a 16-bit DDR memory system, the high-word DDR3 devices are omitted from the placement.

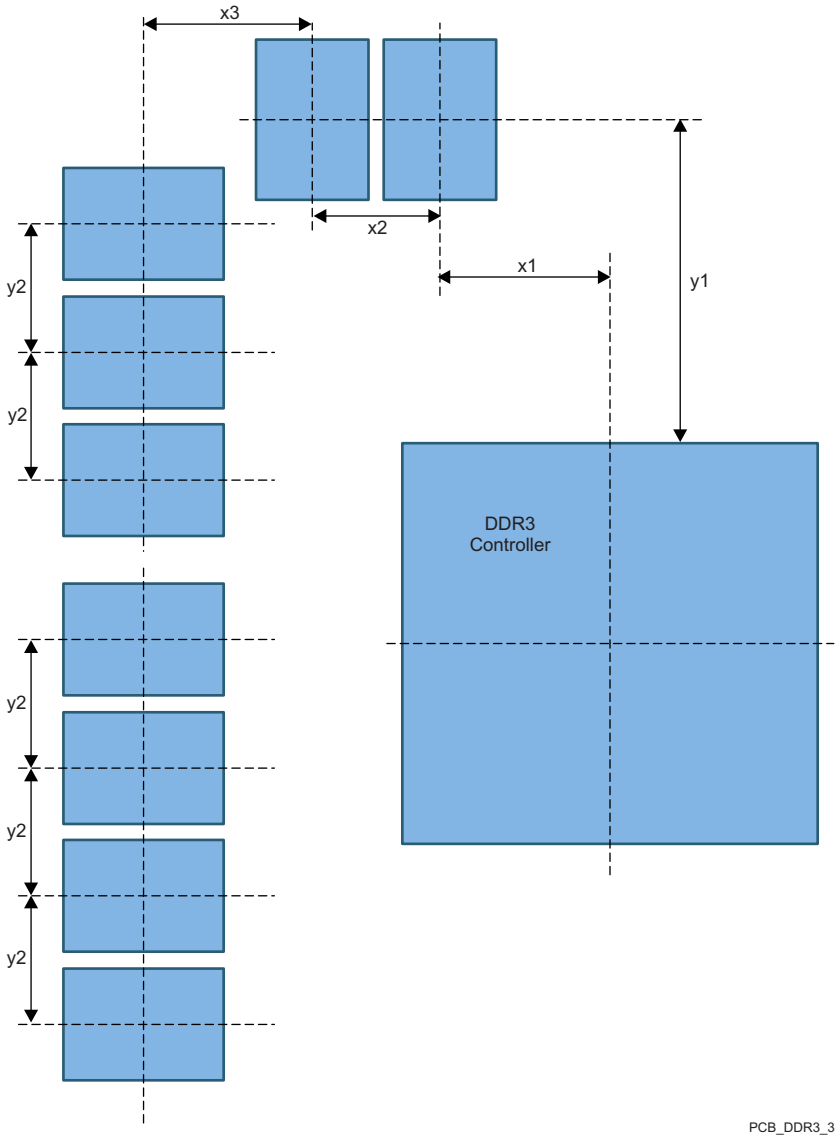

図 8-4. Placement Specifications

表 8-7. Placement Specifications DDR3

NO.	PARAMETER	MIN	MAX	UNIT
KOD31	X1		500	Mils
KOD32	X2		600	Mils
KOD33	X3		600	Mils
KOD34	Y1		1800	Mils
KOD35	Y2		600	Mils
KOD36	DDR3 keepout region (1)			
KOD37	Clearance from non-DDR3 signal to DDR3 keepout region (2) (3)	4		W

Copyright © 2015–2019, Texas Instruments Incorporated

(1) DDR3 keepout region to encompass entire DDR3 routing area.
(2) Non-DDR3 signals allowed within DDR3 keepout region provided they are separated from DDR3 routing layers by a ground plane.
(3) If a device has more than one DDR controller, the signals from the other controller(s) are considered non-DDR3 and should be separated by this specification.

8.2.2.8 DDR3 Keepout Region

The region of the PCB used for DDR3 circuitry must be isolated from other signals. The DDR3 keepout region is defined for this purpose and is shown in 図 8-5. The size of this region varies with the placement and DDR routing. Additional clearances required for the keepout region are shown in 表 8-7. Non-DDR3 signals should not be routed on the DDR signal layers within the DDR3 keepout region. Non-DDR3 signals may be routed in the region, provided they are routed on layers separated from the DDR signal layers by a ground layer. No breaks should be allowed in the reference ground layers in this region. In addition, the 1.5-V DDR3 power plane should cover the entire keepout region. Also note that the two signals from the DDR3 controller should be separated from each other by the specification in 表 8-7, (see KOD37).

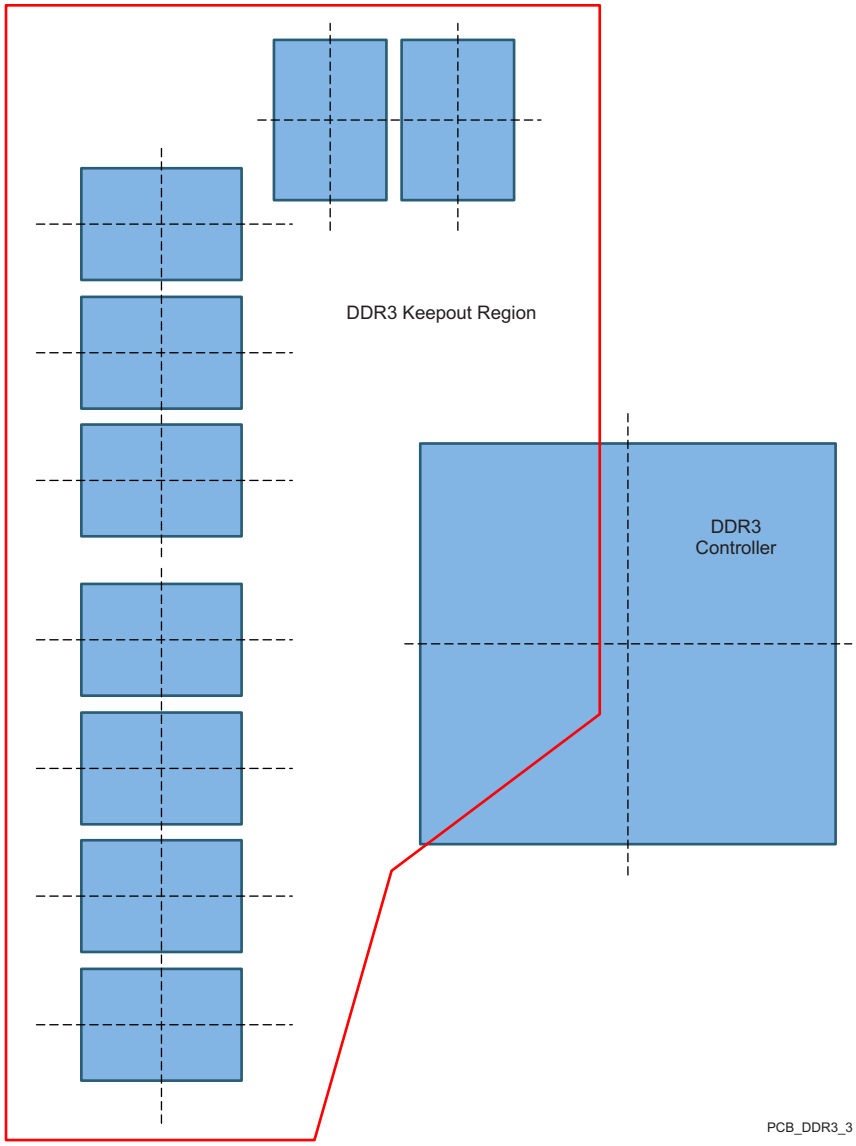

図 8-5. DDR3 Keepout Region

8.2.2.9 Bulk Bypass Capacitors

Bulk bypass capacitors are required for moderate speed bypassing of the DDR3 and other circuitry. 表 8-8 contains the minimum numbers and capacitance required for the bulk bypass capacitors. Note that this table only covers the bypass needs of the DDR3 controllers and DDR3 devices. Additional bulk bypass capacitance may be needed for other circuitry.

表 8-8. Bulk Bypass Capacitors

NO.	PARAMETER	MIN	MAX	UNIT
1	vdds_ddrx bulk bypass capacitor count(1)	1		Devices
2	vdds_ddrx bulk bypass total capacitance	22		µF

(1) These devices should be placed near the devices they are bypassing, but preference should be given to the placement of the high-speed (HS) bypass capacitors and DDR3 signal routing.

8.2.2.10 High-Speed Bypass Capacitors

High-speed (HS) bypass capacitors are critcal for proper DDR3 interface operation. It is particularly important to minimize the parasitic series inductance of the HS bypass capacitors, processor/DDR power, and processor/DDR ground connections. 表 8-9 contains the specification for the HS bypass capacitors as well as for the power connections on the PCB. Generally speaking, it is good to:

1. Fit as many HS bypass capacitors as possible.
2. Minimize the distance from the bypass cap to the pins/balls being bypassed.
3. Use the smallest physical sized capacitors possible with the highest capacitance readily available.
4. Connect the bypass capacitor pads to their vias using the widest traces possible and using the largest hole size via possible.
5. Minimize via sharing. Note the limites on via sharing shown in 表 8-9.

表 8-9. High-Speed Bypass Capacitors

NO.	PARAMETER	MIN	TYP	MAX	UNIT
1	HS bypass capacitor package size(1)		0201	0402	10 Mils
2	Distance, HS bypass capacitor to processor being bypassed(2)(3)(4)			400	Mils
3	processor HS bypass capacitor count per vdds_ddrx rail (12)	See 8.4 and (11)			Devices
4	processor HS bypass capacitor total capacitance per vdds_ddrx rail (12)	See 8.4 and (11)			µF
5	Number of connection vias for each device power/ground ball(5)				Vias
6	Trace length from device power/ground ball to connection via(2)		35	70	Mils
7	Distance, HS bypass capacitor to DDR device being bypassed(6)			150	Mils
8	DDR3 device HS bypass capacitor count(7)	12			Devices
9	DDR3 device HS bypass capacitor total capacitance(7)	0.85			µF
10	Number of connection vias for each HS capacitor(8)(9)	2			Vias
11	Trace length from bypass capacitor connect to connection via(2)(9)		35	100	Mils
12	Number of connection vias for each DDR3 device power/ground ball(10)	1			Vias
13	Trace length from DDR3 device power/ground ball to connection via(2)(8)		35	60	Mils

(1) LxW, 10-mil units, that is, a 0402 is a 40x20-mil surface-mount capacitor.

(2) Closer/shorter is better.

(3) Measured from the nearest processor power/ground ball to the center of the capacitor package.

(4) Three of these capacitors should be located underneath the processor, between the cluster of DDR_1V5 balls and ground balls, between the DDR interfaces on the package.

(5) See the Via Channel™ escape for the processor package.

(6) Measured from the DDR3 device power/ground ball to the center of the capacitor package.

(7) Per DDR3 device.

(8) An additional HS bypass capacitor can share the connection vias only if it is mounted on the opposite side of the board. No sharing of vias is permitted on the same side of the board.

Copyright © 2015–2019, Texas Instruments Incorporated

(9) An HS bypass capacitor may share a via with a DDR device mounted on the same side of the PCB. A wide trace should be used for the connection and the length from the capacitor pad to the DDR device pad should be less than 150 mils.

(10) Up to a total of two pairs of DDR power/ground balls may share a via.

(11) The capacitor recommendations in this data manual reflect only the needs of this processor. Please see the memory vendor's guidelines for determining the appropriate decoupling capacitor arrangement for the memory device itself.

(12) For more information, see , *Core Power Domains*

8.2.2.10.1 Return Current Bypass Capacitors

Use additional bypass capacitors if the return current reference plane changes due to DDR3 signals hopping from one signal layer to another. The bypass capacitor here provides a path for the return current to hop planes along with the signal. As many of these return current bypass capacitors should be used as possible. Because these are returns for signal current, the signal via size may be used for these capacitors.

8.2.2.11 Net Classes

表 8-10 lists the clock net classes for the DDR3 interface. 表 8-11 lists the signal net classes, and associated clock net classes, for signals in the DDR3 interface. These net classes are used for the termination and routing rules that follow.

表 8-10. Clock Net Class Definitions

CLOCK NET CLASS	processor PIN NAMES
CK	ddrx_ck / ddrx_nck
DQS0	ddrx_dqs0 / ddrx_dqsn0
DQS1	ddrx_dqs1 / ddrx_dqsn1
DQS2(1)	ddrx_dqs2 / ddrx_dqsn2
DQS3(1)	ddrx_dqs3 / ddrx_dqsn3

(1) Only used on 32-bit wide DDR3 memory systems.

表 8-11. Signal Net Class Definitions

SIGNAL NET CLASS	ASSOCIATED CLOCK NET CLASS	processor PIN NAMES
ADDR_CTRL	CK	ddrx_ba[2:0], ddrx_a[14:0], ddrx_csn*j*, ddrx_casn, ddrx_rasn, ddrx_wen, ddrx_cke, ddrx_odt*i*
DQ0	DQS0	ddrx_d[7:0], ddrx_dqm0
DQ1	DQS1	ddrx_d[15:8], ddrx_dqm1
DQ2(1)	DQS2	ddrx_d[23:16], ddrx_dqm2
DQ3(1)	DQS3	ddrx_d[31:24], ddrx_dqm3

(1) Only used on 32-bit wide DDR3 memory systems.

8.2.2.12 DDR3 Signal Termination

Signal terminators are required for the CK and ADDR_CTRL net classes. The data lines are terminated by ODT and, thus, the PCB traces should be unterminated. Detailed termination specifications are covered in the routing rules in the following sections.

8.2.2.13 VREF_DDR Routing

ddrx_vref0 (VREF) is used as a reference by the input buffers of the DDR3 memories as well as the processor. VREF is intended to be half the DDR3 power supply voltage and is typically generated with the DDR3 VDDS and VTT power supply. It should be routed as a nominal 20-mil wide trace with 0.1 µF bypass capacitors near each device connection. Narrowing of VREF is allowed to accommodate routing congestion.

8.2.2.14 VTT

Like VREF, the nominal value of the VTT supply is half the DDR3 supply voltage. Unlike VREF, VTT is expected to source and sink current, specifically the termination current for the ADDR_CTRL net class Thevinen terminators. VTT is needed at the end of the address bus and it should be routed as a power sub-plane. VTT should be bypassed near the terminator resistors.

8.2.2.15 CK and ADDR_CTRL Topologies and Routing Definition

The CK and ADDR_CTRL net classes are routed in a fly-by topology. They are routed in a similar manner and are length matched to minimize skew between them. CK is a bit more complicated because it runs at a higher transition rate and is differential. The following subsections show the topology and routing for various DDR3 configurations for CK and ADDR_CTRL. The figures in the following subsections define the terms for the routing specification detailed in 表 8-12. Balanced-T routing is not recommended.

8.2.2.15.1 Four DDR3 Devices

Four DDR3 devices are supported on the DDR EMIF consisting of four x8 DDR3 devices arranged as one bank (CS). These four devices may be mounted on a single side of the PCB, or may be mirrored in two pairs to save board space at a cost of increased routing complexity and parts on the backside of the PCB.

8.2.2.15.1.1 CK and ADDR_CTRL Topologies, Four DDR3 Devices

図 8-6 shows the topology of the CK net classes and 図 8-7 shows the topology for the corresponding ADDR_CTRL net classes.

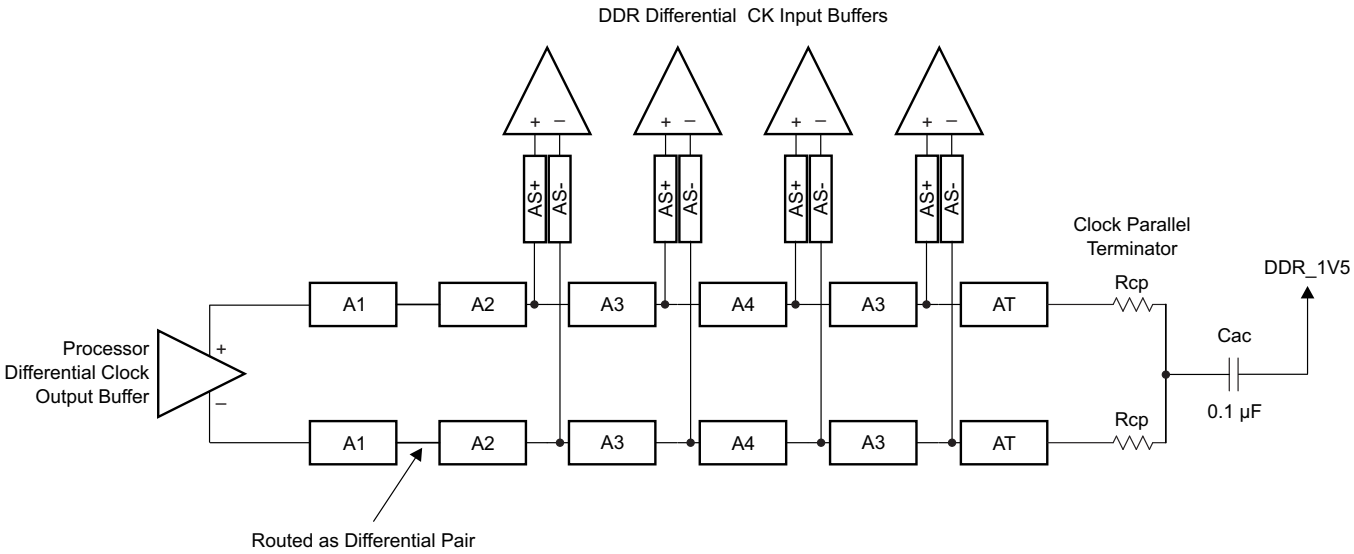

図 8-6. CK Topology for Four x8 DDR3 Devices

Copyright © 2015–2019, Texas Instruments Incorporated

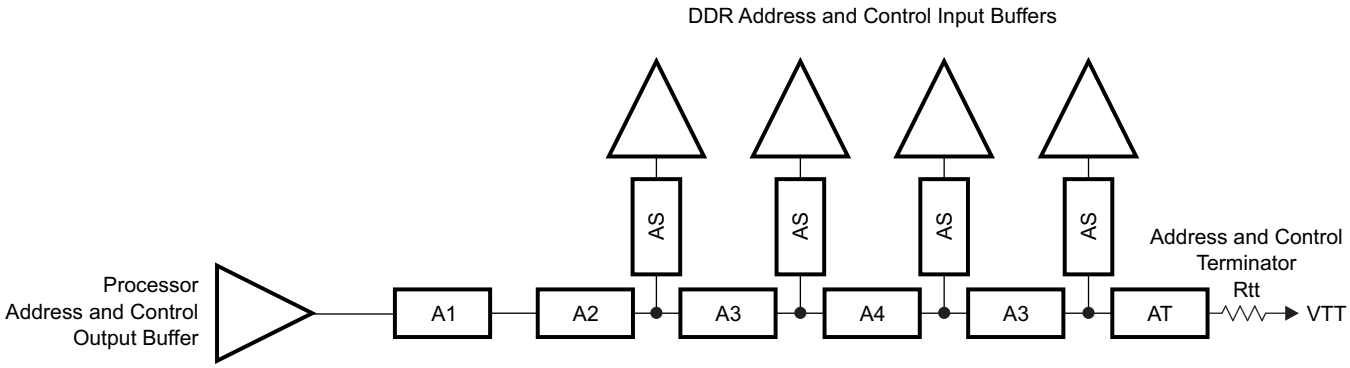

図 8-7. ADDR_CTRL Topology for Four x8 DDR3 Devices

8.2.2.15.1.2 CK and ADDR_CTRL Routing, Four DDR3 Devices

図 8-8 shows the CK routing for four DDR3 devices placed on the same side of the PCB. 図 8-9 shows the corresponding ADDR_CTRL routing.

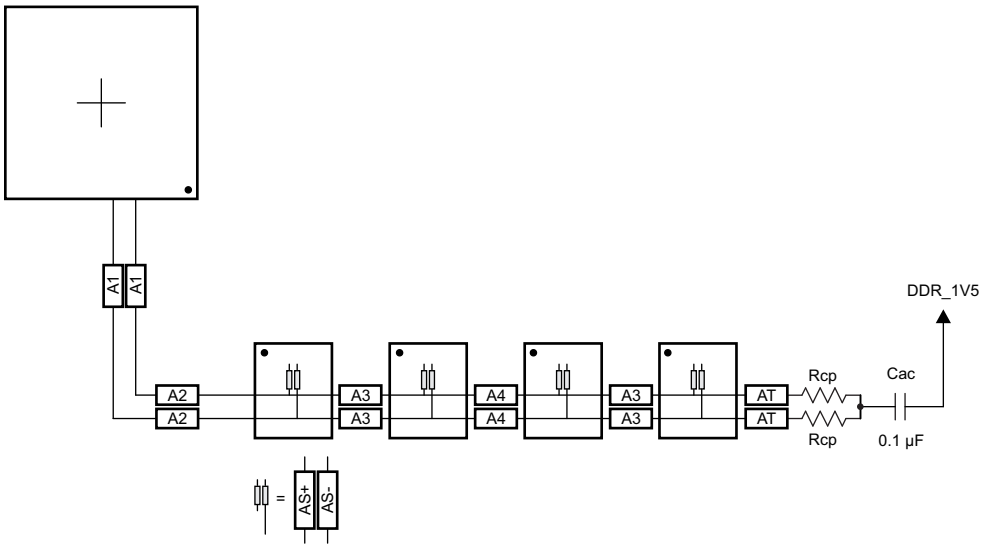

図 8-8. CK Routing for Four Single-Side DDR3 Devices

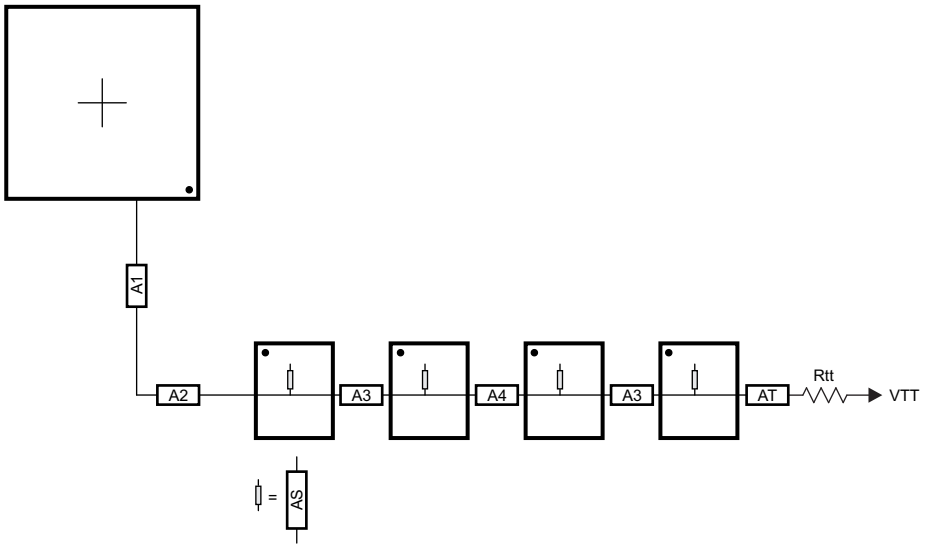

図 8-9. ADDR_CTRL Routing for Four Single-Side DDR3 Devices

To save PCB space, the four DDR3 memories may be mounted as two mirrored pairs at a cost of increased routing and assembly complexity. 図 8-10 and 図 8-11 show the routing for CK and ADDR_CTRL, respectively, for four DDR3 devices mirrored in a two-pair configuration.

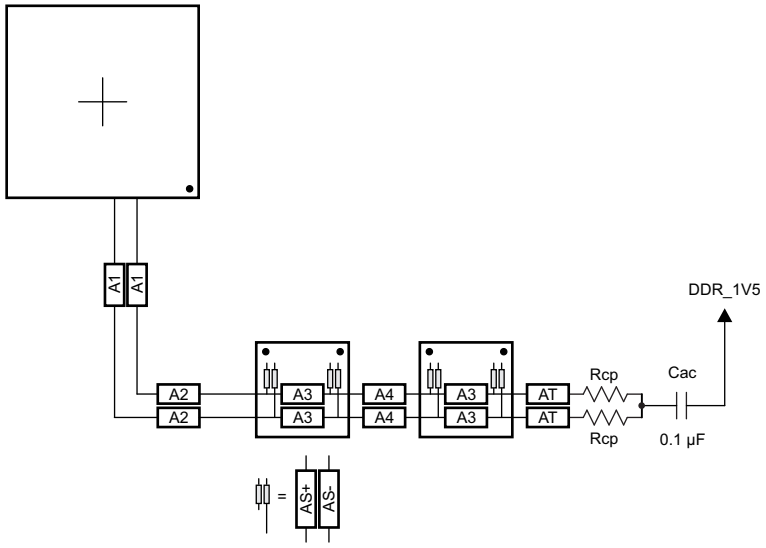

図 8-10. CK Routing for Four Mirrored DDR3 Devices

Copyright © 2015–2019, Texas Instruments Incorporated

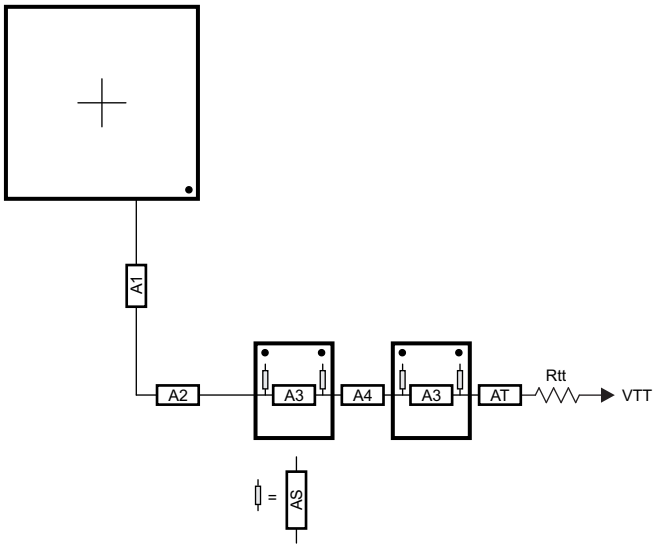

図 8-11. ADDR_CTRL Routing for Four Mirrored DDR3 Devices

8.2.2.15.2 Two DDR3 Devices

Two DDR3 devices are supported on the DDR EMIF consisting of two x8 DDR3 devices arranged as one bank (CS), 16 bits wide, or two x16 DDR3 devices arranged as one bank (CS), 32 bits wide. These two devices may be mounted on a single side of the PCB, or may be mirrored in a pair to save board space at a cost of increased routing complexity and parts on the backside of the PCB.

8.2.2.15.2.1 CK and ADDR_CTRL Topologies, Two DDR3 Devices

図 8-12 shows the topology of the CK net classes and 図 8-13 shows the topology for the corresponding ADDR_CTRL net classes.

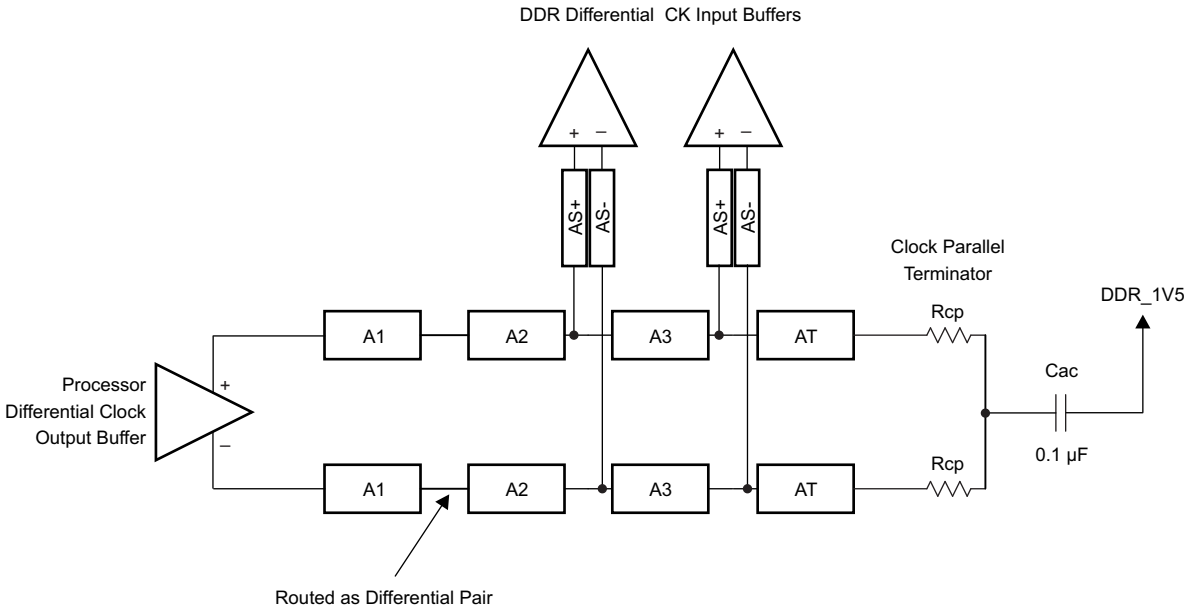

図 8-12. CK Topology for Two DDR3 Devices

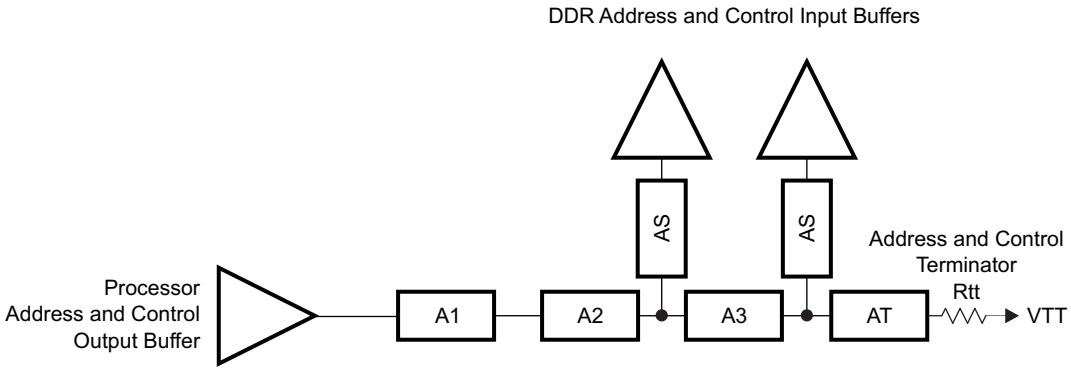

図 8-13. ADDR_CTRL Topology for Two DDR3 Devices

8.2.2.15.2.2 CK and ADDR_CTRL Routing, Two DDR3 Devices

図 8-14 shows the CK routing for two DDR3 devices placed on the same side of the PCB. 図 8-15 shows the corresponding ADDR_CTRL routing.

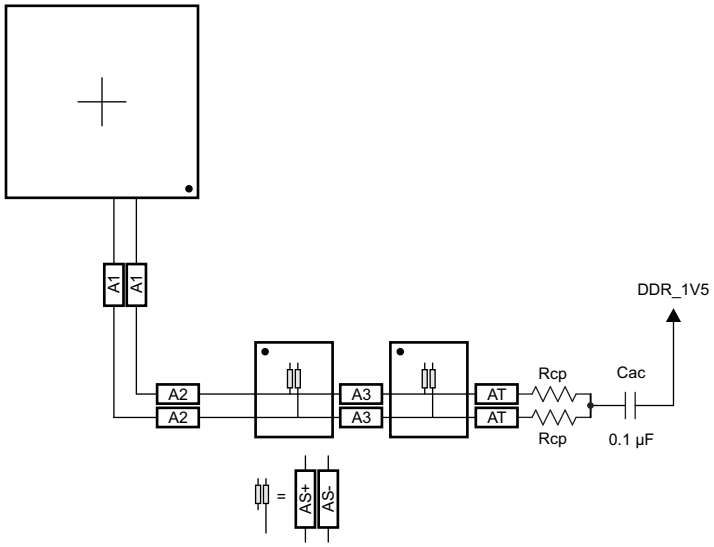

図 8-14. CK Routing for Two Single-Side DDR3 Devices

Copyright © 2015–2019, Texas Instruments Incorporated

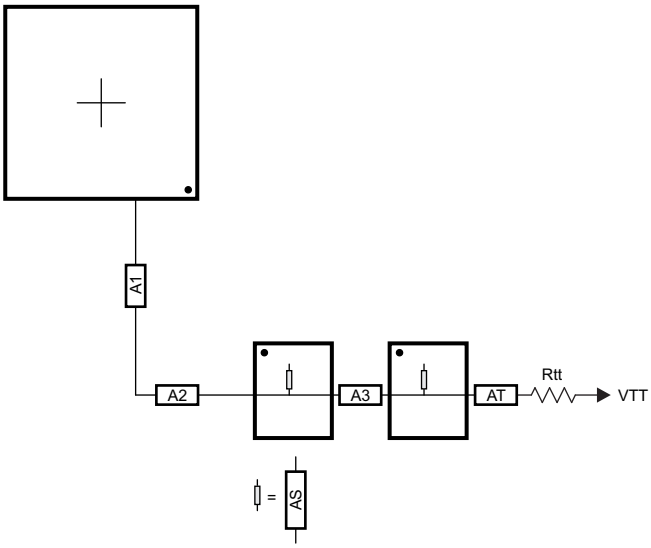

図 8-15. ADDR_CTRL Routing for Two Single-Side DDR3 Devices

To save PCB space, the two DDR3 memories may be mounted as a mirrored pair at a cost of increased routing and assembly complexity. 図 8-16 and 図 8-17 show the routing for CK and ADDR_CTRL, respectively, for two DDR3 devices mirrored in a single-pair configuration.

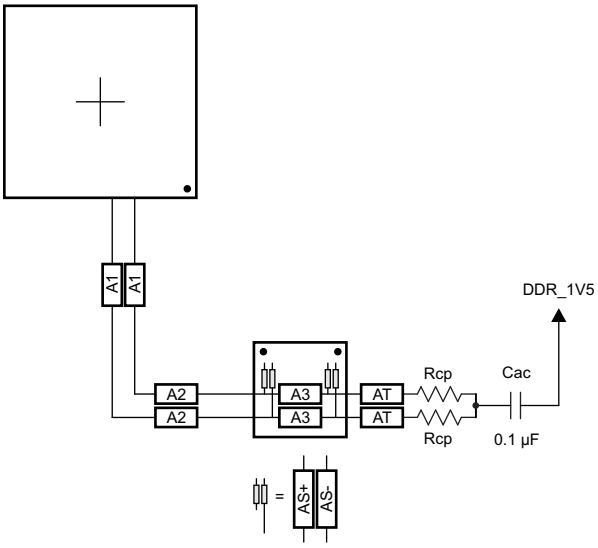

図 8-16. CK Routing for Two Mirrored DDR3 Devices

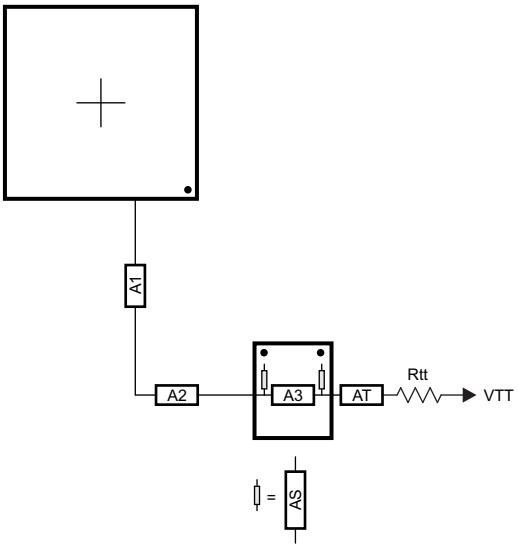

図 8-17. ADDR_CTRL Routing for Two Mirrored DDR3 Devices

8.2.2.15.3 One DDR3 Device

A single DDR3 device is supported on the DDR EMIF consisting of one x16 DDR3 device arranged as one bank (CS), 16 bits wide.

8.2.2.15.3.1 CK and ADDR_CTRL Topologies, One DDR3 Device

図 8-18 shows the topology of the CK net classes and 図 8-19 shows the topology for the corresponding ADDR_CTRL net classes.

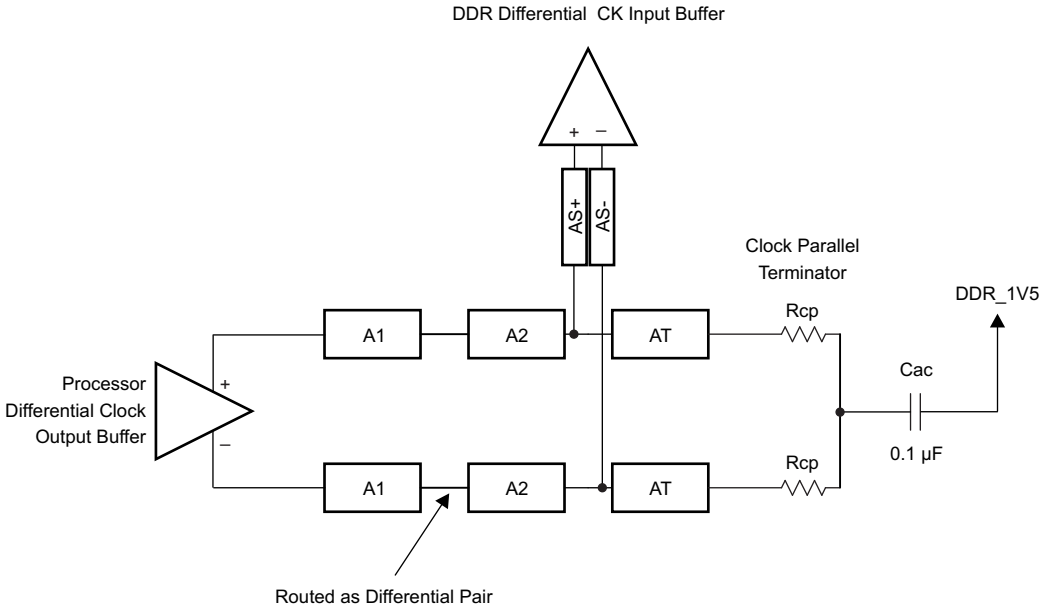

図 8-18. CK Topology for One DDR3 Device

Copyright © 2015–2019, Texas Instruments Incorporated

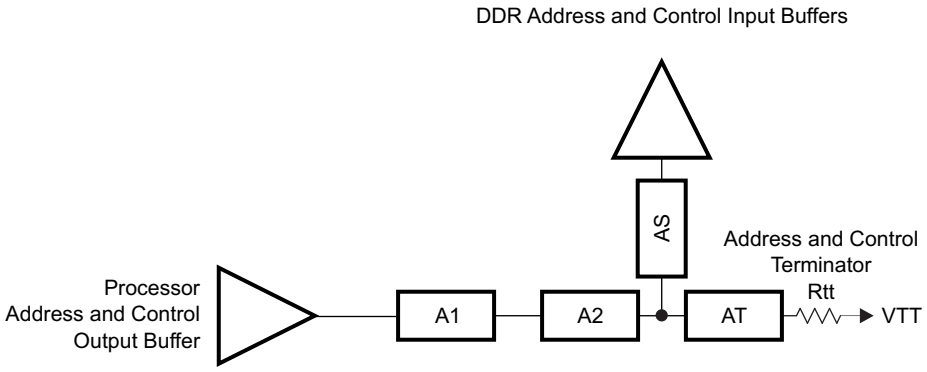

図 8-19. ADDR_CTRL Topology for One DDR3 Device

8.2.2.15.3.2 CK and ADDR/CTRL Routing, One DDR3 Device

図 8-20 shows the CK routing for one DDR3 device placed on the same side of the PCB. 図 8-21 shows the corresponding ADDR_CTRL routing.

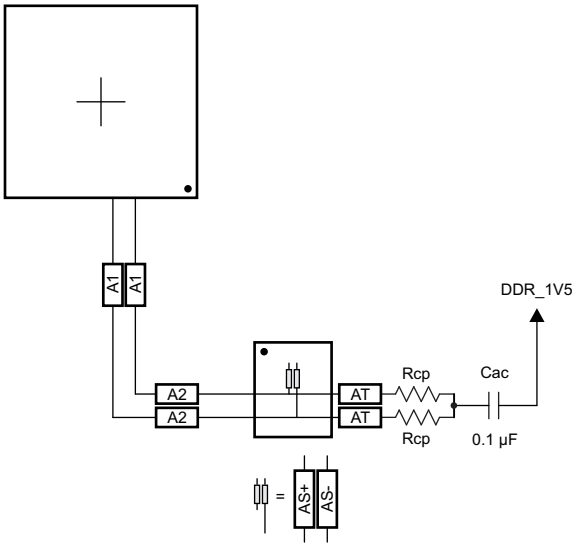

図 8-20. CK Routing for One DDR3 Device

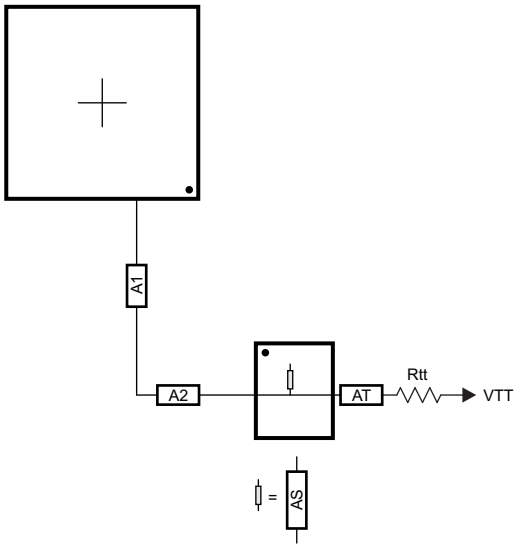

図 8-21. ADDR_CTRL Routing for One DDR3 Device

8.2.2.16 Data Topologies and Routing Definition

No matter the number of DDR3 devices used, the data line topology is always point to point, so its definition is simple.

Care should be taken to minimize layer transitions during routing. If a layer transition is necessary, it is better to transition to a layer using the same reference plane. If this cannot be accommodated, ensure there are nearby ground vias to allow the return currents to transition between reference planes if both reference planes are ground or vdds_ddr. Ensure there are nearby bypass capacitors to allow the return currents to transition between reference planes if one of the reference planes is ground. The goal is to minimize the size of the return current loops.

8.2.2.16.1 DQS and DQ/DM Topologies, Any Number of Allowed DDR3 Devices

DQS lines are point-to-point differential, and DQ/DM lines are point-to-point singled ended. 図 8-22 and 図 8-23 show these topologies.

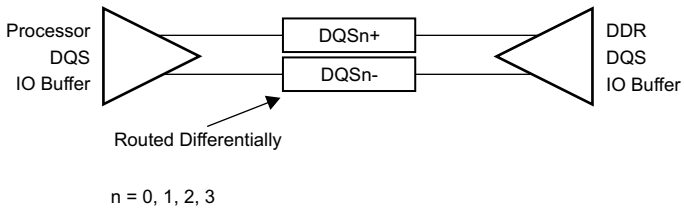

図 8-22. DQS Topology

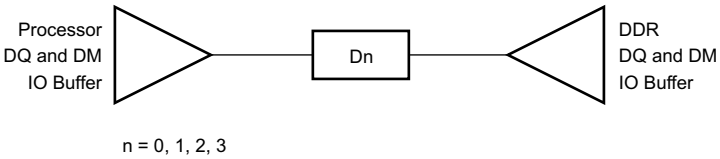

図 8-23. DQ/DM Topology

8.2.2.16.2 DQS and DQ/DM Routing, Any Number of Allowed DDR3 Devices

図 8-24 and 図 8-25 show the DQS and DQ/DM routing.

Copyright © 2015–2019, Texas Instruments Incorporated

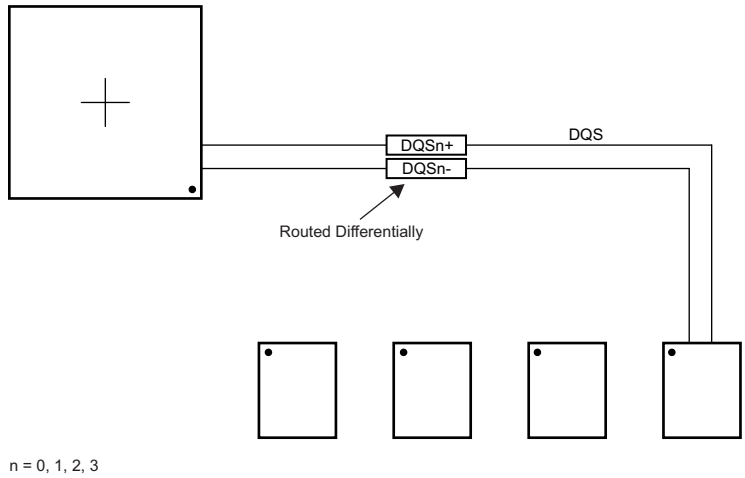

図 8-24. DQS Routing With Any Number of Allowed DDR3 Devices

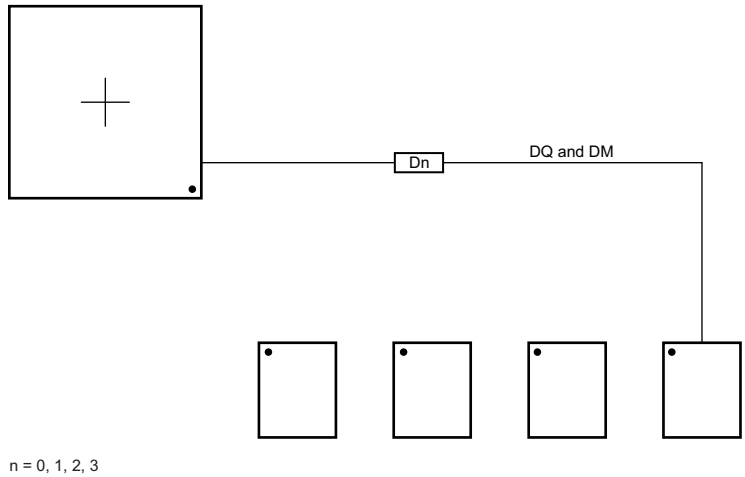

図 8-25. DQ/DM Routing With Any Number of Allowed DDR3 Devices

8.2.2.17 Routing Specification

8.2.2.17.1 CK and ADDR_CTRL Routing Specification

Skew within the CK and ADDR_CTRL net classes directly reduces setup and hold margin and, thus, this skew must be controlled. The only way to practically match lengths on a PCB is to lengthen the shorter traces up to the length of the longest net in the net class and its associated clock. A metric to establish this maximum length is Manhattan distance. The Manhattan distance between two points on a PCB is the length between the points when connecting them only with horizontal or vertical segments. A reasonable trace route length is to within a percentage of its Manhattan distance. CACLM is defined as Clock Address Control Longest Manhattan distance.

Given the clock and address pin locations on the processor and the DDR3 memories, the maximum possible Manhattan distance can be determined given the placement. 図 8-26 and 図 8-27 show this distance for four loads and two loads, respectively. It is from this distance that the specifications on the lengths of the transmission lines for the address bus are determined. CACLM is determined similarly for other address bus configurations; that is, it is based on the longest net of the CK/ADDR_CTRL net class. For CK and ADDR_CTRL routing, these specifications are contained in 表 8-12.

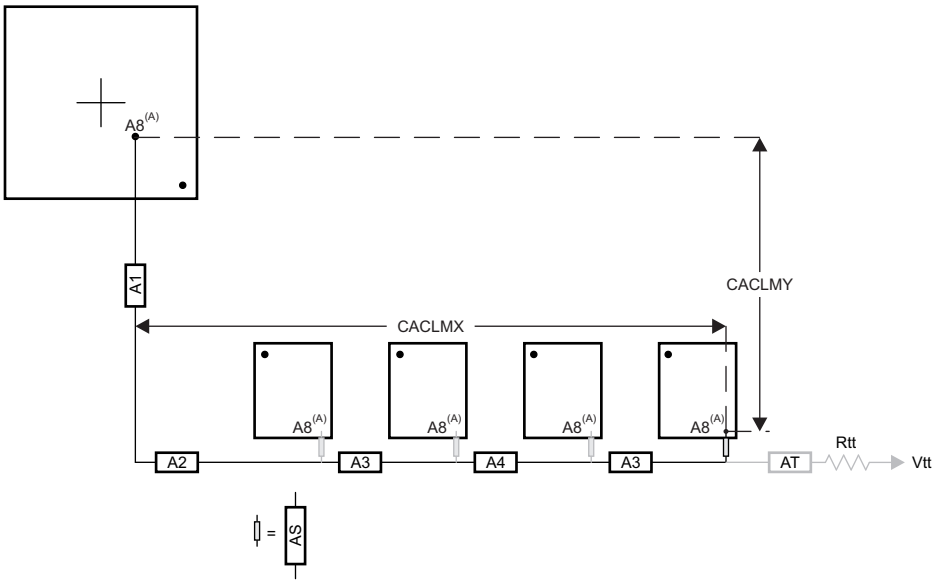

A. It is very likely that the longest CK/ADDR_CTRL Manhattan distance will be for Address Input 8 (A8) on the DDR3 memories. CACLM is based on the longest Manhattan distance due to the device placement. Verify the net class that satisfies this criteria and use as the baseline for CK/ADDR_CTRL skew matching and length control.

The length of shorter CK/ADDR_CTRL stubs as well as the length of the terminator stub are not included in this length calculation. Nonincluded lengths are grayed out in the figure.

Assuming A8 is the longest, CACLM = CACLMY + CACLMX + 300 mils.

The extra 300 mils allows for routing down lower than the DDR3 memories and returning up to reach A8.

図 8-26. CACLM for Four Address Loads on One Side of PCB

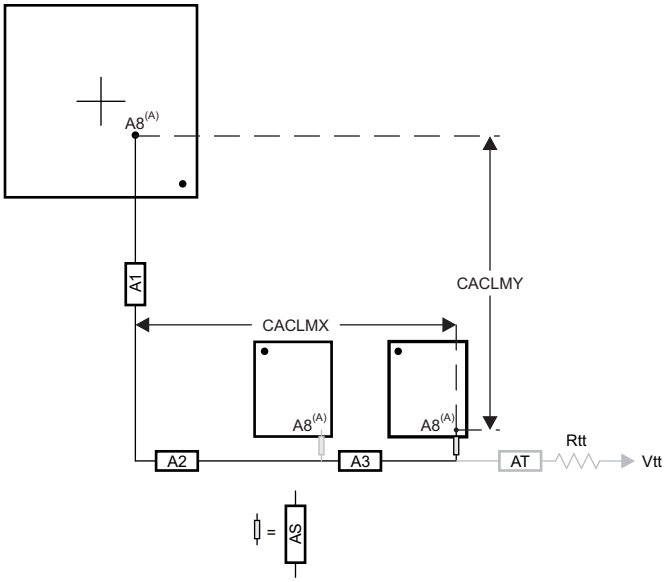

A. It is very likely that the longest CK/ADDR_CTRL Manhattan distance will be for Address Input 8 (A8) on the DDR3 memories. CACLM is based on the longest Manhattan distance due to the device placement. Verify the net class that satisfies this criteria and use as the baseline for CK/ADDR_CTRL skew matching and length control.

The length of shorter CK/ADDR_CTRL stubs as well as the length of the terminator stub are not included in this length calculation. Nonincluded lengths are grayed out in the figure.

Assuming A8 is the longest, CACLM = CACLMY + CACLMX + 300 mils.

The extra 300 mils allows for routing down lower than the DDR3 memories and returning up to reach A8.

図 8-27. CACLM for Two Address Loads on One Side of PCB

Copyright © 2015–2019, Texas Instruments Incorporated

表 8-12. CK and ADDR_CTRL Routing Specification[(2)(3)]

NO.	PARAMETER	MIN	TYP	MAX	UNIT
CARS31	A1+A2 length			500[(1)]	ps
CARS32	A1+A2 skew			29	ps
CARS33	A3 length			125	ps
CARS34	A3 skew[(4)]			6	ps
CARS35	A3 skew[(5)]			6	ps
CARS36	A4 length			125	ps
CARS37	A4 skew			6	ps
CARS38	AS length		5[(1)]	17	ps
CARS39	AS skew		1.3[(1)]	14	ps
CARS310	AS+/AS- length		5	12	ps
CARS311	AS+/AS- skew			1	ps
CARS312	AT length[(6)]		75		ps
CARS313	AT skew[(7)]		14		ps
CARS314	AT skew[(8)]			1	ps
CARS315	CK/ADDR_CTRL trace length			1020	ps
CARS316	Vias per trace			3[(1)]	vias
CARS317	Via count difference			1[(15)]	vias
CARS318	Center-to-center CK to other DDR3 trace spacing[(9)]	4w			
CARS319	Center-to-center ADDR_CTRL to other DDR3 trace spacing[(9)(10)]	4w			
CARS320	Center-to-center ADDR_CTRL to other ADDR_CTRL trace spacing[(9)]	3w			
CARS321	CK center-to-center spacing [(11)(12)]				
CARS322	CK spacing to other net[(9)]	4w			
CARS323	Rcp[(13)]	Zo-1	Zo	Zo+1	Ω
CARS324	Rtt[(13)(14)]	Zo-5	Zo	Zo+5	Ω

(1) Max value is based upon conservative signal integrity approach. This value could be extended only if detailed signal integrity analysis of rise time and fall time confirms desired operation.

(2) The use of vias should be minimized.

(3) Additional bypass capacitors are required when using the DDR_1V5 plane as the reference plane to allow the return current to jump between the DDR_1V5 plane and the ground plane when the net class switches layers at a via.

(4) Non-mirrored configuration (all DDR3 memories on same side of PCB).

(5) Mirrored configuration (one DDR3 device on top of the board and one DDR3 device on the bottom).

(6) While this length can be increased for convenience, its length should be minimized.

(7) ADDR_CTRL net class only (not CK net class). Minimizing this skew is recommended, but not required.

(8) CK net class only.

(9) Center-to-center spacing is allowed to fall to minimum 2w for up to 1250 mils of routed length.

(10) The ADDR_CTRL net class of the other DDR EMIF is considered *other DDR3 trace spacing*.

(11) CK spacing set to ensure proper differential impedance.

(12) The most important thing to do is control the impedance so inadvertent impedance mismatches are not created. Generally speaking, center-to-center spacing should be either 2w or slightly larger than 2w to achieve a differential impedance equal to twice the singleended impedance, Zo.

(13) Source termination (series resistor at driver) is specifically not allowed.

(14) Termination values should be uniform across the net class.

(15) Via count difference may increase by 1 only if accurate 3-D modeling of the signal flight times – including accurately modeled signal propagation through vias – has been applied to ensure all segment skew maximums are not exceeded.

8.2.2.17.2 DQS and DQ Routing Specification

Skew within the DQS and DQ/DM net classes directly reduces setup and hold margin and thus this skew must be controlled. The only way to practically match lengths on a PCB is to lengthen the shorter traces up to the length of the longest net in the net class and its associated clock. As with CK and ADDR_CTRL, a reasonable trace route length is to within a percentage of its Manhattan distance. DQLMn is defined as DQ Longest Manhattan distance n, where n is the byte number. For a 32-bit interface, there are four DQLMs, DQLM0-DQLM3. Likewise, for a 16-bit interface, there are two DQLMs, DQLM0-DQLM1.

注: It is not required, nor is it recommended, to match the lengths across all bytes. Length matching is only required within each byte.

Given the DQS and DQ/DM pin locations on the processor and the DDR3 memories, the maximum possible Manhattan distance can be determined given the placement. 図 8-28 shows this distance for four loads. It is from this distance that the specifications on the lengths of the transmission lines for the data bus are determined. For DQS and DQ/DM routing, these specifications are contained in 表 8-13.

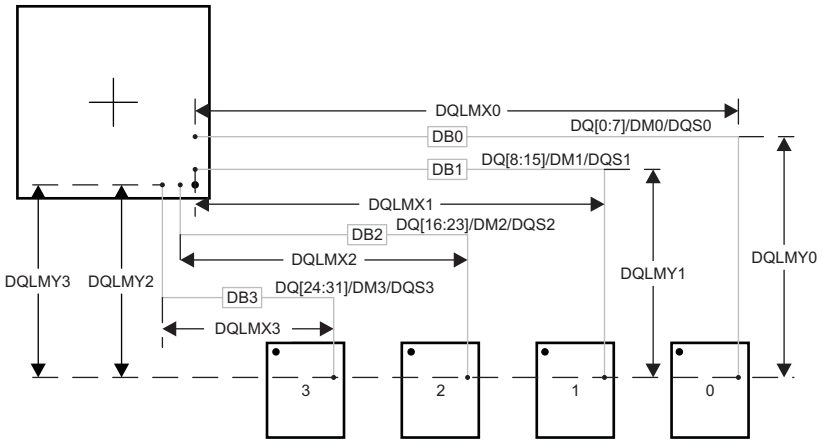

DB0 - DB3 represent data bytes 0 - 3.

There are four DQLMs, one for each byte (32-bit interface). Each DQLM is the longest Manhattan distance of the byte; therefore:

DQLM0 = DQLMX0 + DQLMY0

DQLM1 = DQLMX1 + DQLMY1

DQLM2 = DQLMX2 + DQLMY2

DQLM3 = DQLMX3 + DQLMY3

図 8-28. DQLM for Any Number of Allowed DDR3 Devices

表 8-13. Data Routing Specification(2)

NO.	PARAMETER	MIN	TYP	MAX	UNIT
DRS31	DB0 length			340	ps
DRS32	DB1 length			340	ps
DRS33	DB2 length			340	ps
DRS34	DB3 length			340	ps
DRS35	DBn skew(3)			5	ps
DRS36	DQSn+ to DQSn- skew			1	ps
DRS37	DQSn to DBn skew(3)(4)			5(10)	ps
DRS38	Vias per trace			2(1)	vias
DRS39	Via count difference			0(10)	vias
DRS310	Center-to-center DBn to other DDR3 trace spacing(6)	4			w(5)
DRS311	Center-to-center DBn to other DBn trace spacing(7)	3			w(5)

Copyright © 2015–2019, Texas Instruments Incorporated

表 8-13. Data Routing Specification[(2)] (continued)

NO.	PARAMETER	MIN	TYP	MAX	UNIT
DRS312	DQSn center-to-center spacing [(8) (9)]				
DRS313	DQSn center-to-center spacing to other net	4			w[(5)]

(1) Max value is based upon conservative signal integrity approach. This value could be extended only if detailed signal integrity analysis of rise time and fall time confirms desired operation.

(2) External termination disallowed. Data termination should use built-in ODT functionality.

(3) Length matching is only done within a byte. Length matching across bytes is neither required nor recommended.

(4) Each DQS pair is length matched to its associated byte.

(5) Center-to-center spacing is allowed to fall to minimum 2w for up to 1250 mils of routed length.

(6) Other DDR3 trace spacing means other DDR3 net classes not within the byte.

(7) This applies to spacing within the net classes of a byte.

(8) DQS pair spacing is set to ensure proper differential impedance.

(9) The most important thing to do is control the impedance so inadvertent impedance mismatches are not created. Generally speaking, center-to-center spacing should be either 2w or slightly larger than 2w to achieve a differential impedance equal to twice the singleended impedance, Zo.

(10) Via count difference may increase by 1 only if accurate 3-D modeling of the signal flight times – including accurately modeled signal propagation through vias – has been applied to ensure DBn skew and DQSn to DBn skew maximums are not exceeded.

8.3 High Speed Differential Signal Routing Guidance

The *High-Speed Interface Layout Guidelines Application Report (SPRAAR7)* available from http://www.ti.com/lit/pdf/spraar7 provides guidance for successful routing of the high speed differential signals. This includes PCB stackup and materials guidance as well as routing skew, length and spacing limits. TI supports *only* designs that follow the board design guidelines contained in the application report.

8.4 Power Distribution Network Implementation Guidance

The *Sitara Processor Power Distribution Networks: Implementation and Analysis (SPRAC76)* available from http://www.ti.com/lit/pdf/sprac76 provides guidance for successful implementation of the power distribution network. This includes PCB stackup guidance as well as guidance for optimizing the selection and placement of the decoupling capacitors. TI supports *only* designs that follow the board design guidelines contained in the application report.

8.5 Thermal Solution Guidance

The *Thermal Design Guide for DSP and Arm Application Processors Application Report (SPRABI3)* available from http://www.ti.com/lit/pdf/sprabi3 and the *AM572x Thermal Considerations Application Report (SPRAC53)* available from http://www.ti.com/lit/pdf/sprac53 provide guidance for successful implementation of a thermal solution for system designs that contain an AM57xx application processor. They provide background information on common terms and methods related to thermal solutions. Test data and thermal calculations are also provided for a sample design. TI supports only designs that follow the system design guidelines contained in the application reports. Devices must be operated within their rated temperature ranges at all times to maintain proper function and rated Power On Hours.

8.6 Single-Ended Interfaces

8.6.1 General Routing Guidelines

The following paragraphs detail the routing guidelines that must be observed when routing the various functional LVCMOS interfaces.

- Line spacing:
  - For a line width equal to W, the spacing between two lines must be 2W, at least. This minimizes the crosstalk between switching signals between the different lines. On the PCB, this is not achievable everywhere (for example, when breaking signals out from the device package), but it is recommended to follow this rule as much as possible. When violating this guideline, minimize the length of the traces running parallel to each other (see 図 8-29).

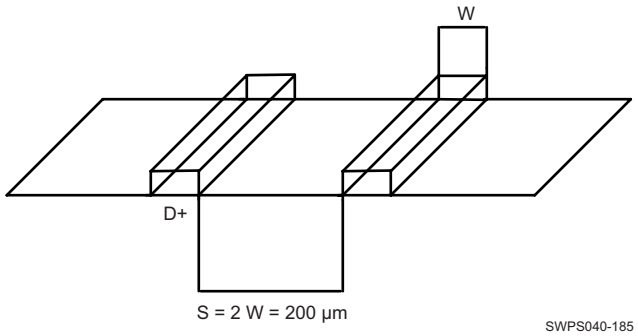

図 8-29. Ground Guard Illustration

- Length matching (unless otherwise specified):
  - For bus or traces at frequencies less than 10 MHz, the trace length matching (maximum length difference between the longest and the shortest lines) must be less than 25 mm.
  - For bus or traces at frequencies greater than 10 MHz, the trace length matching (maximum length difference between the longest and the shortest lines) must be less than 2.5 mm.
- Characteristic impedance
  - Unless otherwise specified, the characteristic impedance for single-ended interfaces is recommended to be between 35-Ω and 65-Ω.
- Multiple peripheral support
  - For interfaces where multiple peripherals have to be supported in the star topology, the length of each branch has to be balanced. Before closing the PCB design, it is highly recommended to verify signal integrity based on simulations including actual PCB extraction.

8.6.2 QSPI Board Design and Layout Guidelines

The following section details the routing guidelines that must be observed when routing the QSPI interfaces.

- The qspi1_sclk output signal must be looped back into the qspi1_rtclk input.
- The signal propagation delay from the qspi1_sclk ball to the QSPI device CLK input pin (A to C) must be approximately equal to the signal propagation delay from the QSPI device CLK pin to the qspi1_rtclk ball (C to D).
- The signal propagation delay from the QSPI device CLK pin to the qspi1_rtclk ball (C to D) must be approximately equal to the signal propagation delay of the control and data signals between the QSPI device and the SoC device (E to F, or F to E).
- The signal propagation delay from the qspi1_sclk signal to the series terminators (R2 = 10 Ω) near the QSPI device must be < 450pS (~7cm as stripline or ~8cm as microstrip)
- 50 Ω PCB routing is recommended along with series terminations, as shown in 図 8-30.
- Propagation delays and matching:
  - A to C = C to D = E to F.
  - Matching skew: < 60pS
  - A to B < 450pS
  - B to C = as small as possible (<60pS)

Copyright © 2015–2019, Texas Instruments Incorporated

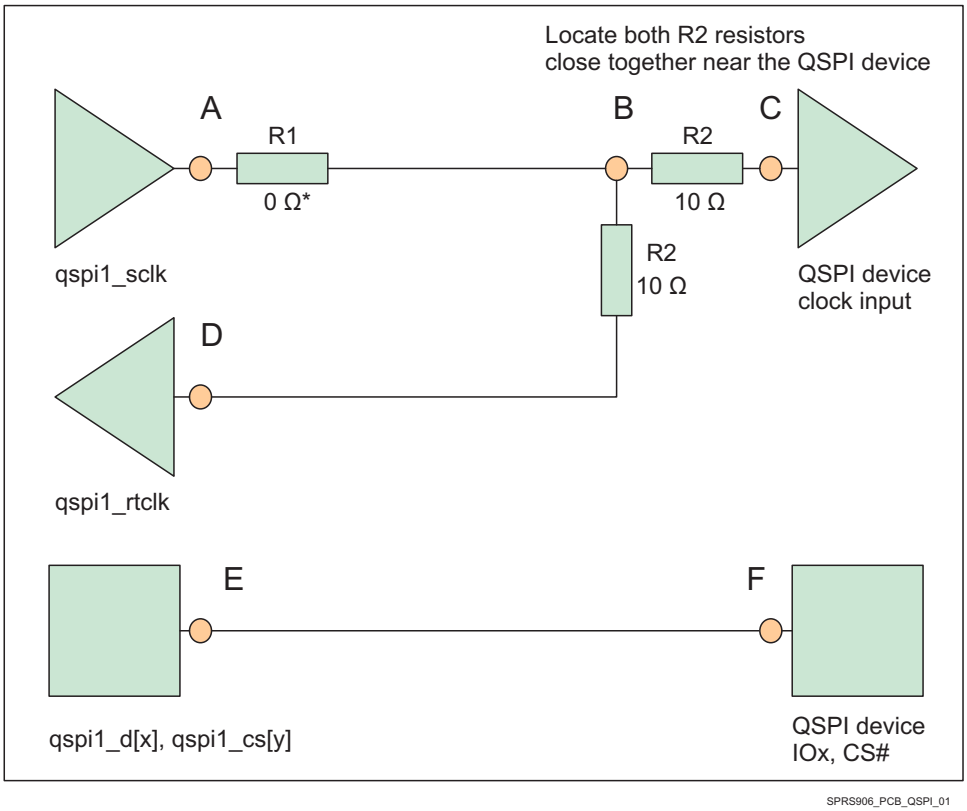

図 8-30. QSPI Interface High Level Schematic

(1) 0 Ω resistor (R1), located as close as possible to the qspi1_sclk pin, is placeholder for fine-tuning if needed.

8.7 LJCB_REFN/P Connections

A Common Refclk Rx Architecture is required to be used for the device PCIe interface. Specifically, two modes of Common Refclk Rx Architecture are supported:

- **External REFCLK Mode**: An common external 100MHz clock source is distributed to both the Device and the link partner
- **Output REFCLK Mode**: A 100MHz HCSL clock source is output by the device and used by the link partner

In **External REFCLK Mode**, a high-quality, low-jitter, differential HCSL 100MHz clock source compliant to the PCIe REFCLK AC Specifications should be provided on the Device's ljcb_clkn / ljcb_clkp inputs.

Alternatively, an LVDS clock source can be used with the following additional requirements:

- External AC coupling capacitors described in 表 8-14 should be populated at the ljcb_clkn / ljcb_clkp inputs.
- All termination requirements (ex. parallel 100ohm termination) from the clock source manufacturer should be followed.

In **Output REFCLK Mode**, the 100MHz clock from the Device's DPLL_PCIE_REF should be output on the Device's ljcb_clkn / ljcb_clkp pins and used as the HCSL REFCLK by the link partner. External near-side termination to ground described in 表 8-15 is required on both of the ljcb_clkn / ljcb_clkp outputs in this mode.

表 8-14. LJCB_REFN/P Requirements in External LVDS REFCLK Mode

PARAMETER	MIN	TYP	MAX	UNIT
ljcb_clkn / ljcb_clkp AC coupling capacitor value		100		nF

表 8-14. LJCB_REFN/P Requirements in External LVDS REFCLK Mode (continued)

PARAMETER	MIN	TYP	MAX	UNIT
ljcb_clkn / ljcb_clkp AC coupling capacitor package size		0402	0603	EIA(1)(2)

(1) EIA LxW units, that is, a 0402 is a 40x20 mils surface mount capacitor.
(2) The physical size of the capacitor should be as small as practical. Use the same size on both lines in each pair placed side by side.

表 8-15. LJCB_REFN/P Requirements in Output REFCLK Mode

PARAMETER	MIN	TYP	MAX	UNIT
ljcb_clkn / ljcb_clkp near-side termination to ground value	47.5	50	52.5	Ohms

8.8 Clock Routing Guidelines

8.8.1 32-kHz Oscillator Routing

When designing the printed-circuit board:

- Keep the crystal as close as possible to the crystal pins X1 and X2.
- Keep the trace lengths short and small to reduce capacitor loading and prevent unwanted noise pickup.
- Place a guard ring around the crystal and tie the ring to ground to help isolate the crystal from unwanted noise pickup.
- Keep all signals out from beneath the crystal and the X1 and X2 pins to prevent noise coupling.
- Finally, an additional local ground plane on an adjacent PCB layer can be added under the crystal to shield it from unwanted pickup from traces on other layers of the board. This plane must be isolated from the regular PCB ground plane and tied to the GND pin of the RTC. The plane must not be any larger than the perimeter of the guard ring. Make sure that this ground plane does not contribute to significant capacitance (a few pF) between the signal line and ground on the connections that run from X1 and X2 to the crystal.

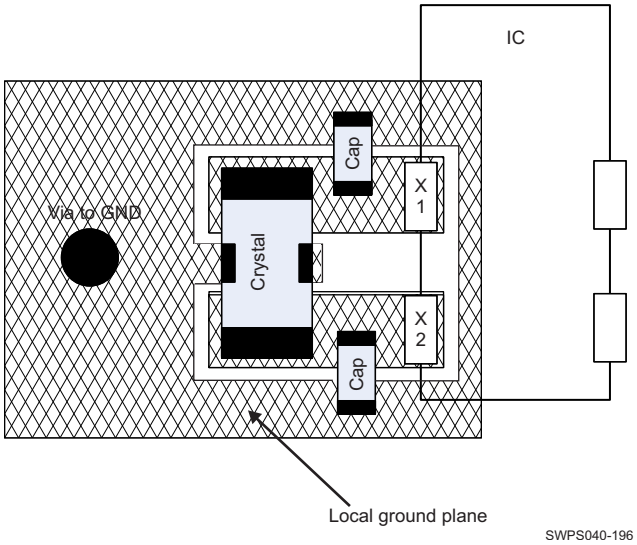

図 8-31. Slow Clock PCB Requirements

8.8.2 Oscillator Ground Connection

Although the impedance of a ground plane is low it is, of course, not zero. Therefore, any noise current in the ground plane causes a voltage drop in the ground. 図 8-32 shows the grounding scheme for slow (low frequency) clock generated from the internal oscillator.

Copyright © 2015–2019, Texas Instruments Incorporated

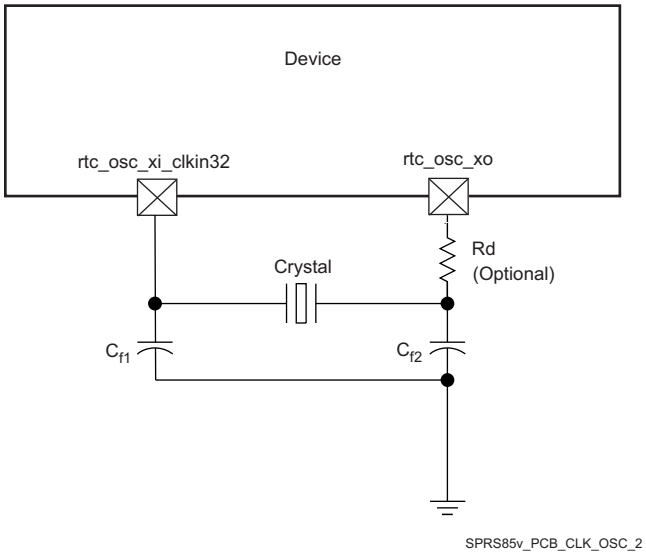

図 8-32. Grounding Scheme for Low-Frequency Clock

図 8-33 shows the grounding scheme for high-frequency clock.

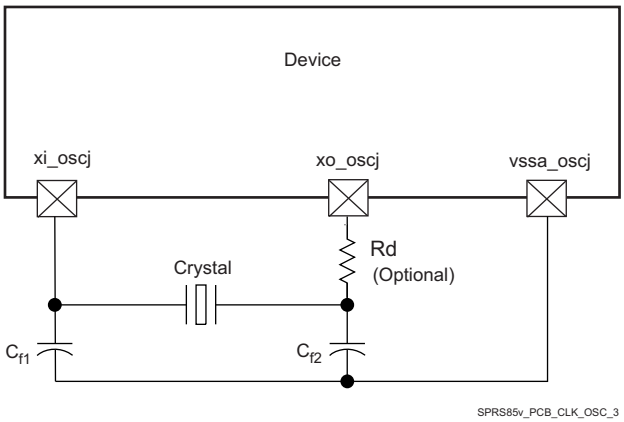

(1) j in *_osc = 0 or 1

図 8-33. Grounding Scheme for High-Frequency Clock

9 Device and Documentation Support

TI offers an extensive line of development tools, including methods to evaluate the performance of the processors, generate code, develop algorithm implementations, and fully integrate and debug software and hardware modules as listed below.

9.1 Device Nomenclature

To designate the stages in the product development cycle, TI assigns prefixes to the part numbers of all microprocessors (MPUs) and support tools. Each device has one of three prefixes: X, P, or null (no prefix) (for example, AM572x). Texas Instruments recommends two of three possible prefix designators for its support tools: TMDX and TMDS. These prefixes represent evolutionary stages of product development from engineering prototypes (TMDX) through fully qualified production devices and tools (TMDS).

Device development evolutionary flow:

X Experimental device that is not necessarily representative of the final device's electrical specifications and may not use production assembly flow.

P Prototype device that is not necessarily the final silicon die and may not necessarily meet final electrical specifications.

null Production version of the silicon die that is fully qualified.

Support tool development evolutionary flow:

TMDX Development-support product that has not yet completed Texas Instruments internal qualification testing.

TMDS Fully-qualified development-support product.

X and P devices and TMDX development-support tools are shipped against the following disclaimer:

"Developmental product is intended for internal evaluation purposes."

Production devices and TMDS development-support tools have been characterized fully, and the quality and reliability of the device have been demonstrated fully. TI's standard warranty applies.

Predictions show that prototype devices (X or P) have a greater failure rate than the standard production devices. Texas Instruments recommends that these devices not be used in any production system because their expected end-use failure rate still is undefined. Only qualified production devices are to be used.

For orderable part numbers of AM572x devices in the ABC package type, see the Package Option Addendum of this document, the TI website (ti.com), or contact your TI sales representative.

For additional description of the device nomenclature markings on the die, see the Silicon Errata (literature number SPRZ429).

9.1.1 Standard Package Symbolization

注: Some devices may have a cosmetic circular marking visible on the top of the device package which results from the production test process. In addition, some devices may also show a color variation in the package substrate which results from the substrate manufacturer. These differences are cosmetic only with no reliability impact.

Copyright © 2015–2019, Texas Instruments Incorporated

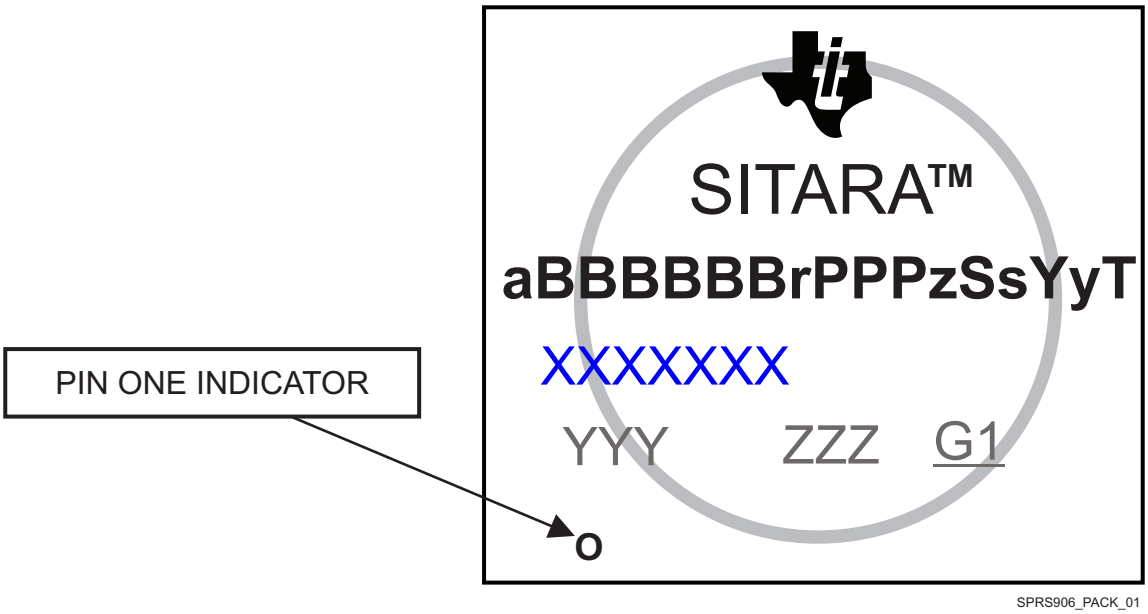

図 9-1. Printed Device Reference

9.1.2 Device Naming Convention

表 9-1. Nomenclature Description

FIELD PARAMETER	FIELD DESCRIPTION	VALUE	DESCRIPTION
a	Device evolution stage	X	Prototype
		P	Preproduction (production test flow, no reliability data)
		BLANK	Production
BBBBBB	Base production part number	AM5729	Super Tier (See 表 3-1, *Device Comparison*)
		AM5728	High Tier (See 表 3-1, *Device Comparison*)
		AM5726	Low Tier (See 表 3-1, *Device Comparison*)
r	Device revision	BLANK	SR 1.0
		A	SR 1.1
		B	SR 2.0
PPP	Package Designator	ABC	ABC S-PBGA-N760 (23mm × 23mm) Package
z	Device Speed	X	High speed grade (see 表 5-5, *Speed Grade Maximum Frequency*)
		OTHER	Alternate speed grade
Ss	Security Identifier	TU	Dummy key secure device
		BLANK	General purpose device
Yy	Device type	E	All industrial protocols enabled (basic protocols plus EtherCAT slave and POWERLINK slave)
		BLANK	Basic Industrial protocols enabled
		Yn	Letter followed by number indicates HS device with customer key
T	Temperature [(2)]	A	Extended (see 表 5-4, *Recommended Operating Conditions*)
		BLANK	Commercial (see 表 5-4, *Recommended Operating Conditions*)
XXXXXXX	Lot Trace Code (LTC)		
YYY	Production Code; For TI use only		
ZZZ	Production Code; For TI use only		
O	Pin one designator		
G1	ECAT—Green package designator		

(1) To designate the stages in the product development cycle, TI assigns prefixes to the part numbers. These prefixes represent evolutionary stages of product development from engineering prototypes through fully qualified production devices.

Prototype devices are shipped against the following disclaimer:

"This product is still in development and is intended for internal evaluation purposes."

Notwithstanding any provision to the contrary, TI makes no warranty expressed, implied, or statutory, including any implied warranty of merchantability of fitness for a specific purpose, of this device.

(2) Applies to device max junction temperature.

注: BLANK in the symbol or part number is collapsed so there are no gaps between characters.

9.2 Tools and Software

The following products support development for AM572x platforms:

Design Kits and Evaluation Modules

AM572x Evaluation Module The AM572x Evaluation Module provides an affordable platform to quickly start evaluation of Sitara™ Arm® Cortex®-A15 AM57x Processors (AM5728, AM5726, AM5718, AM5716) and accelerate development for HMI, machine vision, networking, medical imaging and many other industrial applications. It is a development platform based on the dual Arm® Cortex®-A15, dual C66x DSP processor that is integrated with tons of connectivity such as PCIe, SATA, HDMI, USB 3.0/2.0, Dual Gigabit Ethernet, and more.

The AM572x Evaluation Module also integrates video and 3D/2D graphics acceleration, as well as a dual-core Programmable Real-time Unit (PRU) and dual Arm® Cortex®-M4 cores.

AM572x Industrial Development Kit (IDK) The AM572x Industrial Development Kit (IDK) is a development platform for evaluating the industrial communication and control capabilities of Sitara AM572x processors for applications in factory automation, drives, robotics, grid infrastructure, and more. AM572x processors include dual PRU-ICSS (Programmable Real-time Unit for Industrial Communications) sub-systems which can be used for industrial Ethernet protocols such as Profinet, EtherCAT, Ethernet/IP, and others. The TMDXIDK5728 breaks out six ports of Ethernet, four of which can be used concurrently: 2x Gb Ethernet ports and 2x 10/100 Ethernet ports from the PRU-ICSS subsystems.

Development Tools

Code Composer Studio (CCS) Integrated Development Environment (IDE) Code Composer Studio is an integrated development environment (IDE) that supports TI's Microcontroller and Embedded Processors portfolio. Code Composer Studio comprises a suite of tools used to develop and debug embedded applications. It includes an optimizing C/C++ compiler, source code editor, project build environment, debugger, profiler, and many other features. The intuitive IDE provides a single user interface taking you through each step of the application development flow. Familiar tools and interfaces allow users to get started faster than ever before. Code Composer Studio combines the advantages of the Eclipse software framework with advanced embedded debug capabilities from TI resulting in a compelling feature-rich development environment for embedded developers.

Pin mux tool The Pin MUX Utility is a software tool which provides a Graphical User Interface for configuring pin multiplexing settings, resolving conflicts and specifying I/O cell characteristics for TI MPUs. Results are output as C header/code files that can be imported into software development kits (SDKs) or used to configure customer's custom software. Version 4 of the Pin Mux utility adds the capability of automatically selecting a mux configuration that satisfies the entered requirements.

Power Estimation Tool (PET) Power Estimation Tool (PET) provides users the ability to gain insight in to the power consumption of select TI processors. The tool includes the ability for the user to choose multiple application scenarios and understand the power consumption as well as how advanced power saving techniques can be applied to further reduce overall power consumption.

Models

AM572x BSDL Model BSDL Model

AM572x IBIS Model IBIS Model

Copyright © 2015–2019, Texas Instruments Incorporated

AM572x 23 mm Thermal Models Thermal Model

For a complete listing of development-support tools for the processor platform, visit the Texas Instruments website at ti.com. For information on pricing and availability, contact the nearest TI field sales office or authorized distributor.

9.3 Documentation Support

To receive notification of documentation updates, navigate to the device product folder on ti.com. In the upper right corner, click on *Alert me* to register and receive a weekly digest of any product information that has changed. For change details, review the revision history included in any revised document.

The following documents describe the AM572x devices.

Technical Reference Manual

AM572x Sitara™ Processors Silicon Revision 2.0, 1.1 Details the integration, the environment, the functional description, and the programming models for each peripheral and subsystem in the AM572x family of devices.

Errata

AM572x Sitara™ Processors Silicon Revision 2.0, 1.1 Describes the known exceptions to the functional specifications for the device.

9.4 Related Links

The table below lists quick access links. Categories include technical documents, support and community resources, tools and software, and quick access to sample or buy.

表 9-2. Related Links

PARTS	PRODUCT FOLDER	SAMPLE & BUY	TECHNICAL DOCUMENTS	TOOLS & SOFTWARE	SUPPORT & COMMUNITY
AM5729	Click here	Click here	Click here	Click here	Click here
AM5728	Click here	Click here	Click here	Click here	Click here
AM5726	Click here	Click here	Click here	Click here	Click here

9.5 Community Resources

The following links connect to TI community resources. Linked contents are provided "AS IS" by the respective contributors. They do not constitute TI specifications and do not necessarily reflect TI's views; see TI's Terms of Use.

TI E2E™ Online Community The TI engineer-to-engineer (E2E) community was created to foster collaboration among engineers. At e2e.ti.com, you can ask questions, share knowledge, explore ideas and help solve problems with fellow engineers.

TI Embedded Processors Wiki Established to help developers get started with Embedded Processors from Texas Instruments and to foster innovation and growth of general knowledge about the hardware and software surrounding these devices.

9.6 商標

Sitara, E2E are trademarks of Texas Instruments.
Arm, Cortex are registered trademarks of Arm Limited (or its subsidiaries) in the US and/or elsewhere.
HDQ is a trademark of Benchmarq.
1-Wire is a registered trademark of Dallas Semiconductor.
HDMI is a registered trademark of HDMI Licensing, LLC.
PowerVR is a registered trademark of Imagination Technologies Limited.
MMC, eMMC are trademarks of MultiMediaCard Association.
I^2C is a trademark of NXP Semiconductors.
PCI-Express is a registered trademark of PCI-SIG.
SD is a registered trademark of SD Card Association.
Vivante is a registered trademark of Vivante Corporation.

Copyright © 2015–2019, Texas Instruments Incorporated

All other trademarks are the property of their respective owners.

9.7 静電気放電に関する注意事項

すべての集積回路は、適切なESD保護方法を用いて、取扱いと保存を行うようにして下さい。

静電気放電はわずかな性能の低下から完全なデバイスの故障に至るまで、様々な損傷を与えます。高精度の集積回路は、損傷に対して敏感であり、極めてわずかなパラメータの変化により、デバイスに規定された仕様に適合しなくなる場合があります。

9.8 Glossary

TI Glossary This glossary lists and explains terms, acronyms, and definitions.

Copyright © 2015–2019, Texas Instruments Incorporated

10 Mechanical, Packaging, and Orderable Information

10.1 Packaging Information

The following pages include mechanical, packaging, and orderable information. This information is the most current data available for the designated devices. This data is subject to change without notice and revision of this document. For browser-based versions of this data sheet, refer to the left-hand navigation.

PACKAGING INFORMATION

Orderable part number	Status (1)	Material type (2)	Package | Pins	Package qty | Carrier	RoHS (3)	Lead finish/ Ball material (4)	MSL rating/ Peak reflow (5)	Op temp (°C)	Part marking (6)
AM5726BABCX	Active	Production	FCBGA (ABC) | 760	60 | JEDEC TRAY (5+1)	Yes	Call TI	Level-3-250C-168 HR	0 to 90	AM5726BABCX 842 842 ABC
AM5726BABCX.B	Active	Production	FCBGA (ABC) | 760	60 | JEDEC TRAY (5+1)	Yes	Call TI	Level-3-250C-168 HR	0 to 90	AM5726BABCX 842 842 ABC
AM5726BABCXA	Active	Production	FCBGA (ABC) | 760	60 | JEDEC TRAY (5+1)	Yes	Call TI	Level-3-250C-168 HR	-40 to 105	AM5726BABCXA SITARATM 842 842 ABC
AM5726BABCXA.B	Active	Production	FCBGA (ABC) | 760	60 | JEDEC TRAY (5+1)	Yes	Call TI	Level-3-250C-168 HR	-40 to 105	AM5726BABCXA SITARATM 842 842 ABC
AM5726BABCXAR	Active	Production	FCBGA (ABC) | 760	250 | LARGE T&R	Yes	Call TI	Level-3-250C-168 HR	-40 to 105	AM5726BABCXA 842 842 ABC
AM5726BABCXAR.B	Active	Production	FCBGA (ABC) | 760	250 | LARGE T&R	Yes	Call TI	Level-3-250C-168 HR	-40 to 105	AM5726BABCXA 842 842 ABC
AM5726BABCXEA	Active	Production	FCBGA (ABC) | 760	60 | JEDEC TRAY (5+1)	Yes	Call TI	Level-3-250C-168 HR	-40 to 105	AM5726BABCXEA SITARATM 842 842 ABC
AM5726BABCXEA.B	Active	Production	FCBGA (ABC) | 760	60 | JEDEC TRAY (5+1)	Yes	Call TI	Level-3-250C-168 HR	-40 to 105	AM5726BABCXEA SITARATM 842 842 ABC
AM5728BABCX	Active	Production	FCBGA (ABC) | 760	60 | JEDEC TRAY (5+1)	Yes	Call TI	Level-3-250C-168 HR	0 to 90	AM5728BABCX 842 842 ABC
AM5728BABCX.B	Active	Production	FCBGA (ABC) | 760	60 | JEDEC TRAY (5+1)	Yes	Call TI	Level-3-250C-168 HR	0 to 90	AM5728BABCX 842 842 ABC

Orderable part number	Status (1)	Material type (2)	Package | Pins	Package qty | Carrier	RoHS (3)	Lead finish/ Ball material (4)	MSL rating/ Peak reflow (5)	Op temp (°C)	Part marking (6)
AM5728BABCXA	Active	Production	FCBGA (ABC) | 760	60 | JEDEC TRAY (5+1)	Yes	Call TI	Level-3-250C-168 HR	-40 to 105	AM5728BABCXA 842 842 ABC
AM5728BABCXA.B	Active	Production	FCBGA (ABC) | 760	60 | JEDEC TRAY (5+1)	Yes	Call TI	Level-3-250C-168 HR	-40 to 105	AM5728BABCXA 842 842 ABC
AM5728BABCXEA	Active	Production	FCBGA (ABC) | 760	60 | JEDEC TRAY (5+1)	Yes	Call TI	Level-3-250C-168 HR	-40 to 105	AM5728BABCXEA 842 842 ABC
AM5728BABCXEA.B	Active	Production	FCBGA (ABC) | 760	60 | JEDEC TRAY (5+1)	Yes	Call TI	Level-3-250C-168 HR	-40 to 105	AM5728BABCXEA 842 842 ABC
AM5729BABCX	Active	Production	FCBGA (ABC) | 760	60 | JEDEC TRAY (5+1)	Yes	Call TI	Level-3-250C-168 HR	0 to 90	AM5729BABCX SITARATM 842 842 ABC
AM5729BABCX.B	Active	Production	FCBGA (ABC) | 760	60 | JEDEC TRAY (5+1)	Yes	Call TI	Level-3-250C-168 HR	0 to 90	AM5729BABCX SITARATM 842 842 ABC
AM5729BABCXA	Active	Production	FCBGA (ABC) | 760	60 | JEDEC TRAY (5+1)	Yes	Call TI	Level-3-250C-168 HR	-40 to 105	AM5729BABCXA SITARATM 842 842 ABC
AM5729BABCXA.B	Active	Production	FCBGA (ABC) | 760	60 | JEDEC TRAY (5+1)	Yes	Call TI	Level-3-250C-168 HR	-40 to 105	AM5729BABCXA SITARATM 842 842 ABC
AM5729BABCXEA	Active	Production	FCBGA (ABC) | 760	60 | EIAJ TRAY (5+1)	Yes	Call TI	Level-3-250C-168 HR	-40 to 105	AM5729BABCXEA 842 842 ABC
AM5729BABCXEA.B	Active	Production	FCBGA (ABC) | 760	60 | EIAJ TRAY (5+1)	Yes	Call TI	Level-3-250C-168 HR	-40 to 105	AM5729BABCXEA 842 842 ABC
AM5729BABCXEAR	Active	Production	FCBGA (ABC) | 760	250 | LARGE T&R	Yes	Call TI	Level-3-250C-168 HR	-40 to 105	AM5729BABCXEA SITARATM 842 842 ABC

Orderable part number	Status (1)	Material type (2)	Package | Pins	Package qty | Carrier	RoHS (3)	Lead finish/ Ball material (4)	MSL rating/ Peak reflow (5)	Op temp (°C)	Part marking (6)
AM5729BABCXEAR.B	Active	Production	FCBGA (ABC) | 760	250 | LARGE T&R	Yes	Call TI	Level-3-250C-168 HR	-40 to 105	AM5729BABCXEA SITARATM 842 842 ABC

(1) **Status:** For more details on status, see our product life cycle.

(2) **Material type:** When designated, preproduction parts are prototypes/experimental devices, and are not yet approved or released for full production. Testing and final process, including without limitation quality assurance, reliability performance testing, and/or process qualification, may not yet be complete, and this item is subject to further changes or possible discontinuation. If available for ordering, purchases will be subject to an additional waiver at checkout, and are intended for early internal evaluation purposes only. These items are sold without warranties of any kind.

(3) **RoHS values:** Yes, No, RoHS Exempt. See the TI RoHS Statement for additional information and value definition.

(4) **Lead finish/Ball material:** Parts may have multiple material finish options. Finish options are separated by a vertical ruled line. Lead finish/Ball material values may wrap to two lines if the finish value exceeds the maximum column width.

(5) **MSL rating/Peak reflow:** The moisture sensitivity level ratings and peak solder (reflow) temperatures. In the event that a part has multiple moisture sensitivity ratings, only the lowest level per JEDEC standards is shown. Refer to the shipping label for the actual reflow temperature that will be used to mount the part to the printed circuit board.

(6) **Part marking:** There may be an additional marking, which relates to the logo, the lot trace code information, or the environmental category of the part.

Multiple part markings will be inside parentheses. Only one part marking contained in parentheses and separated by a "~" will appear on a part. If a line is indented then it is a continuation of the previous line and the two combined represent the entire part marking for that device.

Important Information and Disclaimer: The information provided on this page represents TI's knowledge and belief as of the date that it is provided. TI bases its knowledge and belief on information provided by third parties, and makes no representation or warranty as to the accuracy of such information. Efforts are underway to better integrate information from third parties. TI has taken and continues to take reasonable steps to provide representative and accurate information but may not have conducted destructive testing or chemical analysis on incoming materials and chemicals. TI and TI suppliers consider certain information to be proprietary, and thus CAS numbers and other limited information may not be available for release.

In no event shall TI's liability arising out of such information exceed the total purchase price of the TI part(s) at issue in this document sold by TI to Customer on an annual basis.

TRAY

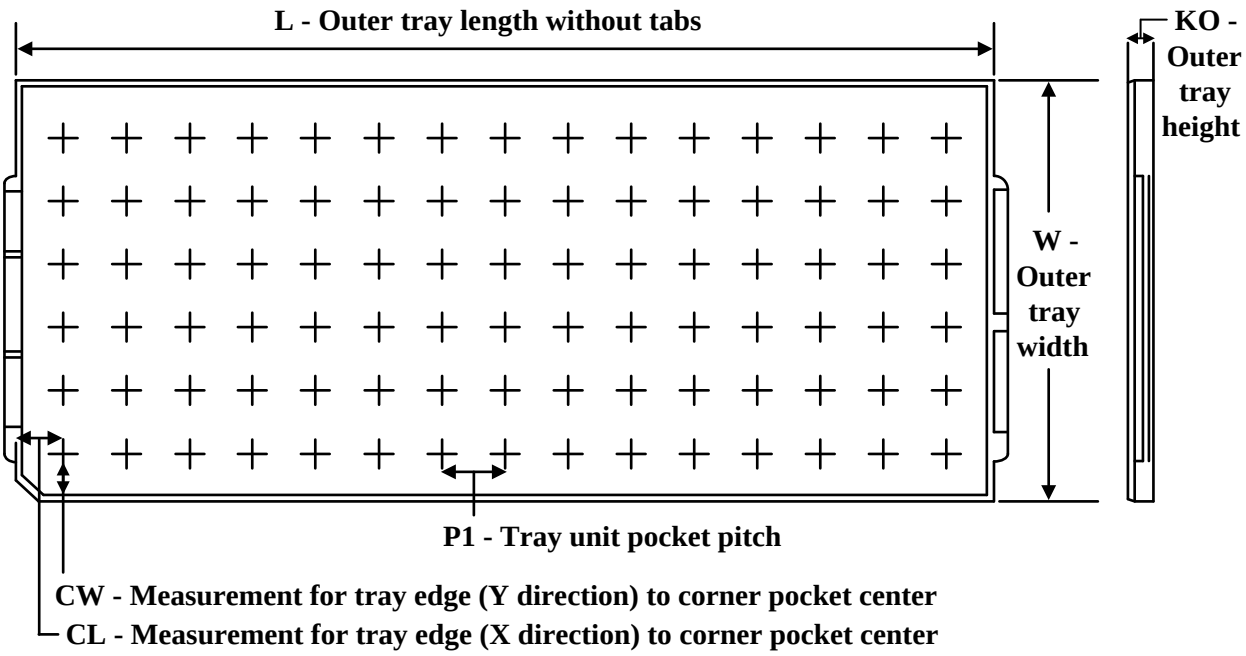

Chamfer on Tray corner indicates Pin 1 orientation of packed units.

*All dimensions are nominal

Device	Package Name	Package Type	Pins	SPQ	Unit array matrix	Max temperature (°C)	L (mm)	W (mm)	K0 (µm)	P1 (mm)	CL (mm)	CW (mm)
AM5726BABCX	ABC	FCBGA	760	60	5 X 12	150	315	135.9	12190	25.5	17.25	16.95
AM5726BABCX.B	ABC	FCBGA	760	60	5 X 12	150	315	135.9	12190	25.5	17.25	16.95
AM5726BABCXA	ABC	FCBGA	760	60	5 X 12	150	315	135.9	12190	25.5	17.25	16.95
AM5726BABCXA.B	ABC	FCBGA	760	60	5 X 12	150	315	135.9	12190	25.5	17.25	16.95
AM5726BABCXEA	ABC	FCBGA	760	60	5 X 12	150	315	135.9	12190	25.5	17.25	16.95
AM5726BABCXEA.B	ABC	FCBGA	760	60	5 X 12	150	315	135.9	12190	25.5	17.25	16.95
AM5728BABCX	ABC	FCBGA	760	60	5 X 12	150	315	135.9	12190	25.5	17.25	16.95
AM5728BABCX.B	ABC	FCBGA	760	60	5 X 12	150	315	135.9	12190	25.5	17.25	16.95
AM5728BABCXA	ABC	FCBGA	760	60	5 X 12	150	315	135.9	12190	25.5	17.25	16.95
AM5728BABCXA.B	ABC	FCBGA	760	60	5 X 12	150	315	135.9	12190	25.5	17.25	16.95
AM5728BABCXEA	ABC	FCBGA	760	60	5 X 12	150	315	135.9	12190	25.5	17.25	16.95
AM5728BABCXEA.B	ABC	FCBGA	760	60	5 X 12	150	315	135.9	12190	25.5	17.25	16.95
AM5729BABCX	ABC	FCBGA	760	60	5 X 12	150	315	135.9	12190	25.5	17.25	16.95
AM5729BABCX.B	ABC	FCBGA	760	60	5 X 12	150	315	135.9	12190	25.5	17.25	16.95
AM5729BABCXA	ABC	FCBGA	760	60	5 X 12	150	315	135.9	12190	25.5	17.25	16.95
AM5729BABCXA.B	ABC	FCBGA	760	60	5 X 12	150	315	135.9	12190	25.5	17.25	16.95
AM5729BABCXEA	ABC	FCBGA	760	60	5 X 12	150	315	135.9	12190	25.5	17.25	16.95

Device	Package Name	Package Type	Pins	SPQ	Unit array matrix	Max temperature (°C)	L (mm)	W (mm)	K0 (µm)	P1 (mm)	CL (mm)	CW (mm)
AM5729BABCXEA.B	ABC	FCBGA	760	60	5 X 12	150	315	135.9	12190	25.5	17.25	16.95

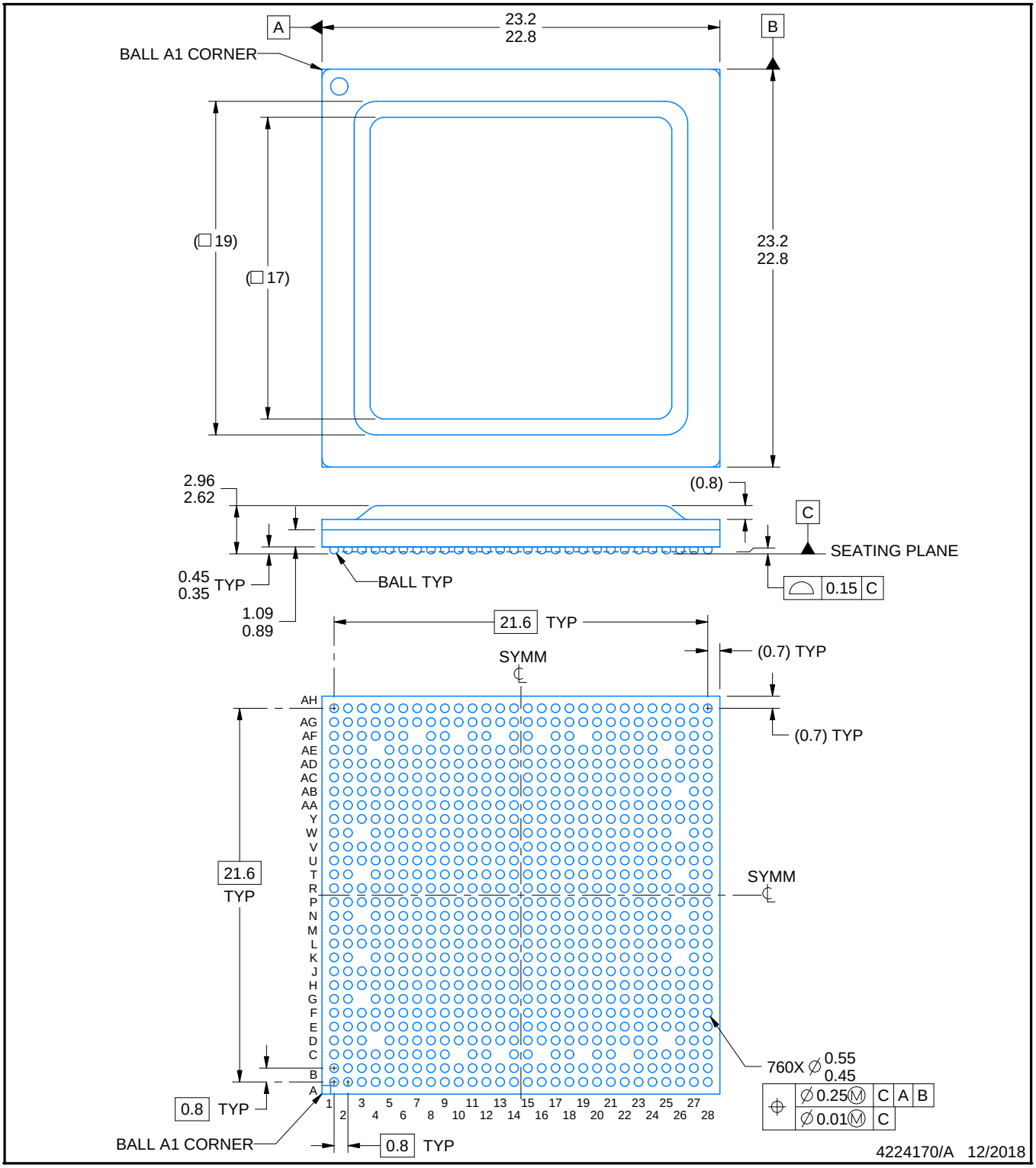

NOTES:

1. All linear dimensions are in millimeters. Any dimensions in parenthesis are for reference only. Dimensioning and tolerancing per ASME Y14.5M.
2. This drawing is subject to change without notice.

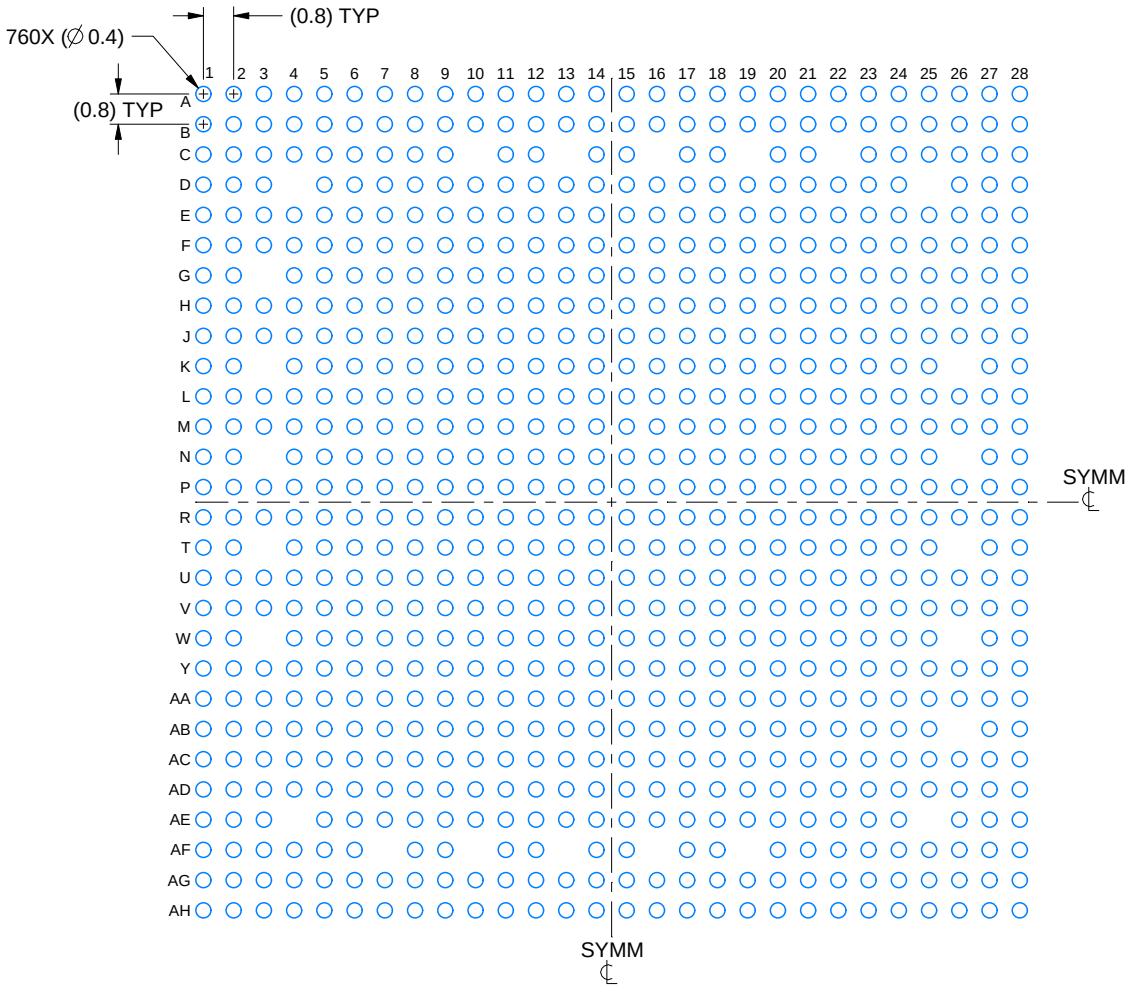

LAND PATTERN EXAMPLE
EXPOSED METAL SHOWN
SCALE:5X

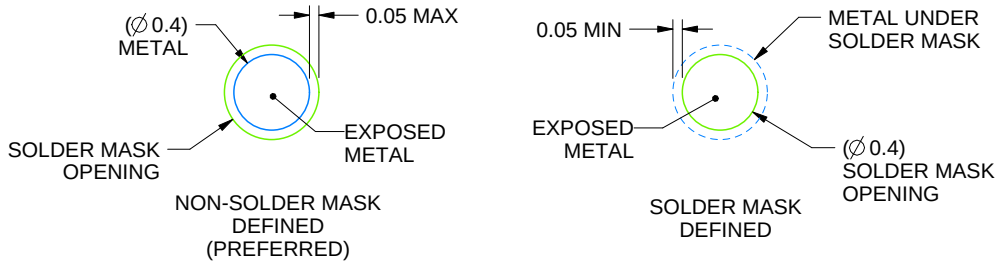

SOLDER MASK DETAILS
NOT TO SCALE

4224170/A 12/2018

NOTES: (continued)

3. Final dimensions may vary due to manufacturing tolerance considerations and also routing constraints.
   For information, see Texas Instruments literature number SPRU811 (www.ti.com/lit/spru811).

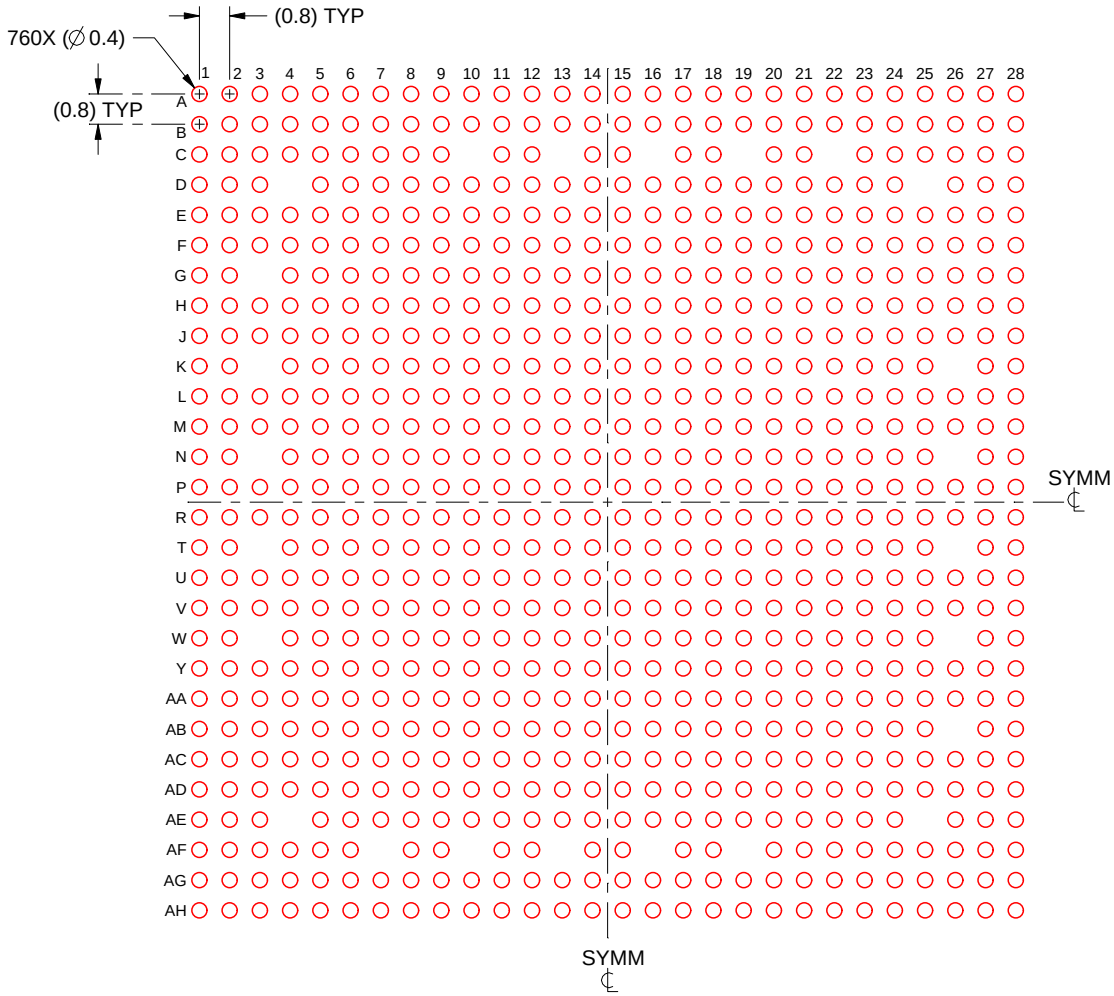

SOLDER PASTE EXAMPLE
BASED ON 0.15 mm THICK STENCIL
SCALE:5X

4224170/A 12/2018

NOTES: (continued)

4. Laser cutting apertures with trapezoidal walls and rounded corners may offer better paste release.

重要なお知らせと免責事項

テキサス· インスツルメンツは、技術データと信頼性データ (データシートを含みます)、設計リソース (リファレンス デザインを含みます)、アプリケーションや設計に関する各種アドバイス、Web ツール、安全性情報、その他のリソースを、欠陥が存在する可能性のある「現状のまま」提供しており、商品性および特定目的に対する適合性の黙示保証、第三者の知的財産権の非侵害保証を含むいかなる保証も、明示的または黙示的にかかわらず拒否します。

これらのリソースは、 テキサス· インスツルメンツ製品を使用する設計の経験を積んだ開発者への提供を意図したものです。(1) お客様のアプリケーションに適した テキサス· インスツルメンツ製品の選定、(2) お客様のアプリケーションの設計、検証、試験、(3) お客様のアプリケーションに該当する各種規格や、その他のあらゆる安全性、セキュリティ、規制、または他の要件への確実な適合に関する責任を、お客様のみが単独で負うものとします。

上記の各種リソースは、予告なく変更される可能性があります。これらのリソースは、リソースで説明されている テキサス· インスツルメンツ製品を使用するアプリケーションの開発の目的でのみ、 テキサス· インスツルメンツはその使用をお客様に許諾します。これらのリソースに関して、他の目的で複製することや掲載することは禁止されています。 テキサス· インスツルメンツや第三者の知的財産権のライセンスが付与されている訳ではありません。お客様は、これらのリソースを自身で使用した結果発生するあらゆる申し立て、損害、費用、損失、責任について、 テキサス· インスツルメンツおよびその代理人を完全に補償するものとし、 テキサス· インスツルメンツは一切の責任を拒否します。

テキサス· インスツルメンツの製品は、 テキサス· インスツルメンツの販売条件、または ti.com やかかる テキサス· インスツルメンツ製品の関連資料などのいずれかを通じて提供する適用可能な条項の下で提供されています。 テキサス· インスツルメンツがこれらのリソースを提供することは、適用される テキサス· インスツルメンツの保証または他の保証の放棄の拡大や変更を意味するものではありません。

お客様がいかなる追加条項または代替条項を提案した場合でも、 テキサス· インスツルメンツはそれらに異議を唱え、拒否します。

郵送先住所：Texas Instruments, Post Office Box 655303, Dallas, Texas 75265
Copyright © 2025, Texas Instruments Incorporated