LMV93x-N-Q1 車載用シングル、デュアル、クワッド、1.8V、RRIOオペアンプ

1 特長

- 車載アプリケーションに対応
- 下記内容でAEC-Q100認定済み：
  - デバイス温度グレード 1: 動作時周囲温度 –40℃～+125°C
  - デバイスHBM ESD分類レベル02
  - デバイスCDM ESD分類レベルC5
- 特記のない限り電源電圧1.8V時の標準値
- 1.8V、2.7V、5Vで動作を規定
- 出力スイング
  - 600Ω負荷でレールから80mV
  - 2kΩ負荷でレールから30mV
- レールを200mV超えるV_{CM}
- 消費電流(チャネルごとに): 100µA
- ゲイン帯域幅積: 1.4MHz
- 最大V_{OS}: 4mV
- 超小型のパッケージ
- 温度範囲: -40℃～+125℃
- WEBENCH® Power Designerにより、LMV93x-N-Q1を使用するカスタム設計を作成

2 アプリケーション

- エンジン制御ユニット(ECU)
- ボディ・コントロール・モジュール(BCM)
- バッテリ管理システム(BMS)
- 超音波距離測定およびLIDAR
- 在室者検出
- インフォテインメント・システム

ハイサイド電流センス・アンプ

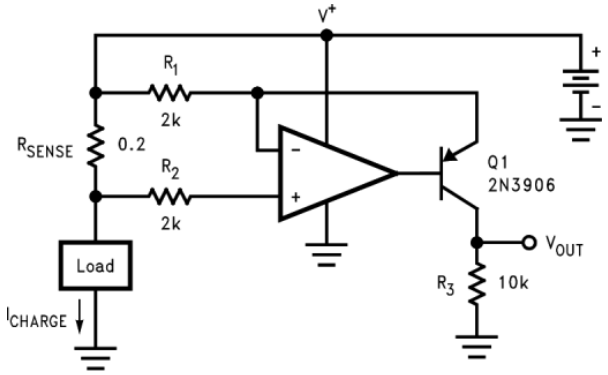

$$V_{OUT} = \frac{R_{SENSE} \cdot R_3}{R_1} \cdot I_{Charge} = 1\Omega \cdot I_{Charge}$$

3 概要

LMV93x-N-Q1ファミリ(LMV931-N-Q1シングル、LMV932-N-Q1デュアル、LMV934-N-Q1クワッド)は、車載アプリケーション用にAEC-Q100グレード1認定済みの低電圧、低消費電力オペアンプです。LMV93x-N-Q1ファミリは、1.8V～5.5Vの電源電圧で動作し、レール・ツー・レール入出力機能があります。入力同相電圧範囲は電源電圧より200mV広いため、電源電圧範囲を超えるユーザー拡張機能が可能になります。1.8V電源で、出力は無負荷時にレール・ツー・レールのスイングが可能で、600Ω負荷のときレールから105mV以内です。LMV93x-N-Q1デバイスは1.8Vで動作するよう最適化されており、携帯用の2セルのバッテリ駆動システム、および単一セルのリチウムイオン・システムに理想的です。

LMV93x-N-Q1デバイスは速度/電力比が非常に優れており、1.8Vの電源電圧と非常に小さな消費電流で、1.4MHzのゲイン帯域幅積を実現しています。LMV93x-N-Q1デバイスは、600Ωの負荷と、最大1000pFの容量性負荷を、最小のリンギングで駆動できます。これらのデバイスはDCゲインも101dBと高く、低周波数のアプリケーションに適しています。

シングルのLMV931-N-Q1は、省スペースの5ピンSC-70およびSOT-23パッケージで供給されます。デュアルのLMV932-N-Q1は8ピンのSOICパッケージ、クワッドのLMV934-N-Q1は14ピンのTSSOPパッケージで供給されます。これらの小さなパッケージは、車載用アプリケーションの、面積の制限されるPC基板に理想的なソリューションです。

製品情報(1)

型番	パッケージ	本体サイズ(公称)
LMV931-N-Q1	SOT-23 (5)	2.90mm×1.60mm
	SC-70 (5)	2.00mm×1.25mm
LMV932-N-Q1	SOIC (8)	4.90mm×3.91mm
LMV934-N-Q1	TSSOP (14)	5.00mm×4.40mm

(1) 提供されているすべてのパッケージについては、データシートの末尾にある注文情報を参照してください。

英語版のTI製品についての情報を翻訳したこの資料は、製品の概要を確認する目的で便宜的に提供しているものです。該当する正式な英語版の最新情報は、www.ti.comで閲覧でき、その内容が常に優先されます。TIでは翻訳の正確性および妥当性につきましては一切保証いたしません。実際の設計などの前には、必ず最新版の英語版をご参照くださいますようお願いいたします。

目次

1 特長 ... 1
2 アプリケーション ... 1
3 概要 ... 1
4 改訂履歴 ... 2
5 **Pin Configuration and Functions** ... 3
6 **Specifications** ... 4
6.1 Absolute Maximum Ratings ... 4
6.2 ESD Ratings ... 4
6.3 Recommended Operating Ratings ... 4
6.4 Thermal Information ... 4
6.5 DC Electrical Characteristics 1.8 V ... 5
6.6 AC Electrical Characteristics 1.8 V ... 6
6.7 DC Electrical Characteristics 2.7 V ... 6
6.8 AC Electrical Characteristics 2.7 V ... 8
6.9 Electrical Characteristics 5 V DC ... 9
6.10 AC Electrical Characteristics 5 V ... 10
6.11 Typical Characteristics ... 11
7 **Detailed Description** ... 16
7.1 Overview ... 16
7.2 Functional Block Diagram ... 16
7.3 Feature Description ... 16
7.4 Device Functional Modes ... 16
8 **Application and Implementation** ... 19
8.1 Application Information ... 19
8.2 Typical Applications ... 19
8.3 Dos and Don'ts ... 23
9 **Power Supply Recommendations** ... 23
10 **Layout** ... 24
10.1 Layout Guidelines ... 24
10.2 Layout Example ... 24
11 デバイスおよびドキュメントのサポート ... 25
11.1 デバイス・サポート ... 25
11.2 ドキュメントのサポート ... 25
11.3 関連リンク ... 25
11.4 ドキュメントの更新通知を受け取る方法 ... 25
11.5 コミュニティ・リソース ... 26
11.6 商標 ... 26
11.7 静電気放電に関する注意事項 ... 26
11.8 Glossary ... 26
12 メカニカル、パッケージ、および注文情報 ... 26

4 改訂履歴

資料番号末尾の英字は改訂を表しています。その改訂履歴は英語版に準じています。

日付	改訂内容	注
2017年5月	*	初版

Copyright © 2017, Texas Instruments Incorporated

5 Pin Configuration and Functions

DBV and DCK Packages
5-Pin SC-70 and SOT-23
LMV931-N-Q1 Top View

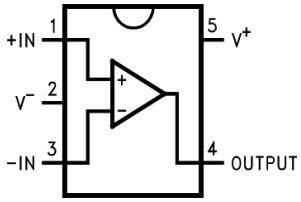

Pin Functions: LMV931-N-Q1

PIN		I/O	DESCRIPTION
NAME	LMV931-N-Q1		
+IN	1	I	Noninverting Input
-IN	3	I	Inverting Input
OUT	4	O	Output
V-	2	P	Negative Supply
V+	5	P	Positive Supply

D Package
8-Pin SOIC
LMV932-N-Q1 Top View

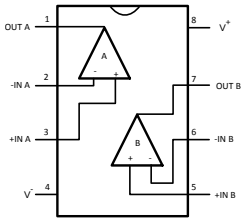

DGK Package
14-Pin TSSOP
LMV934-N-Q1 Top View

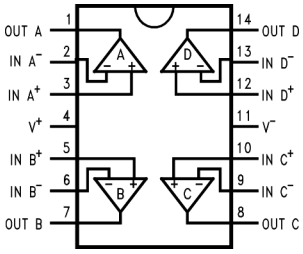

Pin Functions: LMV932-N-Q1 and LMV934-N-Q1

PIN			I/O	DESCRIPTION
NAME	LMV932-N-Q1	LMV934-N-Q1		
+IN A	3	3	I	Noninverting input, channel A
+IN B	5	5	I	Noninverting input, channel B
+IN C	—	10	I	Noninverting input, channel C
+IN D	—	12	I	Noninverting input, channel D
–IN A	2	2	I	Inverting input, channel A
–IN B	6	6	I	Inverting input, channel B
–IN C	—	9	I	Inverting input, channel C
–IN D	—	13	I	Inverting input, channel D
OUT A	1	1	O	Output, channel A
OUT B	7	7	O	Output, channel B
OUT C	—	8	O	Output, channel C
OUT D	—	14	O	Output, channel D
V+	8	4	P	Positive (highest) power supply
V–	4	11	P	Negative (lowest) power supply

Copyright © 2017, Texas Instruments Incorporated

6 Specifications

6.1 Absolute Maximum Ratings

See [1][2].

	MIN	MAX	UNIT
Supply voltage ($V^+ – V^–$)	–0.3	6	V
Differential input voltage	$V^–$	V^+	
Voltage at input/output pins	($V^–$) – 0.3	(V^+) + 0.3	
Junction temperature[3]	–40	150	°C
Storage temperature, T_{stg}	–65	150	°C

(1) *Absolute Maximum Ratings* indicate limits beyond which damage to the device may occur. *Recommended Operating Conditions* indicate conditions for which the device is intended to be functional, but specific performance is not specified. For specifications and the test conditions, see the *Electrical Characteristics*.
(2) If Military/Aerospace specified devices are required, contact the TI Sales Office/Distributors for availability and specifications.
(3) The maximum power dissipation is a function of $T_{J(max)}$, $R_{\theta JA}$, and T_A. The maximum allowable power dissipation at any ambient temperature is $P_D = (T_{J(max)}–T_A)/R_{\theta JA}$. All numbers apply for packages soldered directly into a PC board.

6.2 ESD Ratings

			VALUE	UNIT
$V_{(ESD)}$	Electrostatic discharge	Human-body model (HBM), per AEC Q100-002[1]	±2000	V
		Charged-device model (CDM), per AEC Q100-011	±750	

(1) AEC Q100-002 indicates that HBM stressing shall be in accordance with the ANSI/ESDA/JEDEC JS-001 specification.

6.3 Recommended Operating Ratings

See[1].

	MIN	MAX	UNIT
Supply voltage ($V^+ – V^–$)	1.8	5.5	V
Ambient temperature	−40	125	°C

(1) *Absolute Maximum Ratings* indicate limits beyond which damage to the device may occur. *Recommended Operating Conditions* indicate conditions for which the device is intended to be functional, but specific performance is not specified. For specifications and the test conditions, see the *Electrical Characteristics*.

6.4 Thermal Information

THERMAL METRIC[1]		LMV931-N-Q1		LMV932-N-Q1	LMV934-N-Q1	UNIT
		DBV (SOT-23)	DCK (SC70)	D (SOIC)	PW (TSSOP)	
		5 PINS	5 PINS	8 PINS	14 PINS	
$R_{\theta JA}$	Junction-to-ambient thermal resistance	197.2	285.9	125.9	124.8	°C/W
$R_{\theta JC(top)}$	Junction-to-case (top) thermal resistance	156.7	115.9	70.2	51.4	°C/W
$R_{\theta JB}$	Junction-to-board thermal resistance	55.6	63.7	66.5	67.2	°C/W
ψ_{JT}	Junction-to-top characterization parameter	41.4	4.5	19.8	6.6	°C/W
ψ_{JB}	Junction-to-board characterization parameter	55	62.9	65.9	66.6	°C/W
$R_{\theta JC(bot)}$	Junction-to-case (bottom) thermal resistance	—	—	—	—	°C/W

(1) For more information about traditional and new thermal metrics, see the *Semiconductor and IC Package Thermal Metrics* application report.

Copyright © 2017, Texas Instruments Incorporated

6.5 DC Electrical Characteristics 1.8 V

Unless otherwise specified, all limits specified for T_J = 25°C. V^+ = 1.8 V, V^- = 0 V, V_{CM} = V^+/2, V_O = V^+/2 and R_L > 1 MΩ.

PARAMETER		TEST CONDITIONS		MIN	TYP (1)	MAX	UNIT
V_{OS}	Input Offset Voltage	LMV931-N-Q1 (Single)	25°C		1	4	mV
			Full Range			6	
		LMV932-N-Q1 (Dual), LMV934-N-Q1 (Quad)	25°C		1	5.5	mV
			Full Range			7.5	
TCV_{OS}	Input Offset Voltage Average Drift		Full Range		5.5		µV/°C
I_B	Input Bias Current		25°C		15	35	nA
			Full Range			50	
I_{OS}	Input Offset Current		25°C		13	25	nA
			Full Range			40	
I_S	Supply Current (per channel)		25°C		103	185	µA
			Full Range			205	
CMRR	Common-Mode Rejection Ratio	LMV931-N-Q1, 0 ≤ V_{CM} ≤ 0.6 V 1.4 V ≤ V_{CM} ≤ 1.8 V(2)	25°C	60	78		dB
			Full Range	55			
		LMV932-N-Q1 and LMV934-N-Q1 0 ≤ V_{CM} ≤ 0.6 V 1.4 V ≤ V_{CM} ≤ 1.8 V(2)	25°C	55	76		dB
			Full Range	50			
		−0.2 V ≤ V_{CM} ≤ 0 V 1.8 V ≤ V_{CM} ≤ 2.0 V	25°C	50	72		dB
PSRR	Power Supply Rejection Ratio	1.8 V ≤ V^+ ≤ 5 V	25°C	75	100		dB
			Full Range	70			
CMVR	Input Common-Mode Voltage Range	For CMRR Range ≥ 50dB	25°C	V^- − 0.2	−0.2 to 2.1	V^+ + 0.2	V
			−40°C to 85°C	V^-		V^+	
			125°C	V^- + 0.2		V^+ − 0.2	
A_V	Large Signal Voltage Gain LMV931-N-Q1 (Single)	R_L = 600 Ω to 0.9 V, V_O = 0.2 V to 1.6 V, V_{CM} = 0.5 V	25°C	77	101		dB
			Full Range	73			
		R_L = 2 kΩ to 0.9 V, V_O = 0.2 V to 1.6 V, V_{CM} = 0.5 V	25°C	80	105		dB
			Full Range	75			
	Large Signal Voltage Gain LMV932-N-Q1 (Dual) LMV934-N-Q1 (Quad)	R_L = 600 Ω to 0.9 V, V_O = 0.2 V to 1.6 V, V_{CM} = 0.5 V	25°C	75	90		dB
			Full Range	72			
		R_L = 2 kΩ to 0.9 V, V_O = 0.2 V to 1.6 V, V_{CM} = 0.5 V	25°C	78	100		dB
			Full Range	75			
V_O	Output Swing LMV931-N-Q1 (Single)	R_L = 600 Ω to 0.9 V V_{IN} = ±100 mV	25°C	1.65	1.72		V
					0.077	0.105	
			Full Range	1.63		0.120	
		R_L = 2 kΩ to 0.9 V V_{IN} = ±100 mV	25°C	1.75	1.77		V
					0.024	0.035	
			Full Range	1.74		0.04	

(1) Typical values represent the most likely parametric norm as determined at the time of characterization. Actual typical values may vary over time and will also depend on the application and configuration.
(2) For specified temperature ranges, see the CMVR parameter in *DC Electrical Characteristics 1.8 V* for the input common-mode voltage specifications.

Copyright © 2017, Texas Instruments Incorporated

DC Electrical Characteristics 1.8 V (continued)

Unless otherwise specified, all limits specified for T_J = 25°C. V^+ = 1.8 V, V^- = 0 V, V_{CM} = V^+/2, V_O = V^+/2 and R_L > 1 MΩ.

PARAMETER		TEST CONDITIONS		MIN	TYP (1)	MAX	UNIT
V_O	Output Swing LMV932-N-Q1 (Dual) LMV934-N-Q1 (Quad)	R_L = 600 Ω to 0.9 V V_{IN} = ±100 mV	25°C	1.65	1.72		V
					0.077	0.105	
			Full Range	1.63		0.173	
		R_L = 2 kΩ to 0.9 V V_{IN} = ±100 mV	25°C	1.75	1.77		V
					0.024	0.035	
			Full Range	1.74		0.055	
I_O	Output Short Circuit Current (3)	Sourcing, V_O = 0 V V_{IN} = 100 mV	25°C	4	8		mA
			Full Range	3.3			
		Sinking, V_O = 1.8 V V_{IN} = −100 mV	25°C	7	9		mA
			Full Range	5			

(3) Applies to both single-supply and split-supply operation. Continuous short circuit operation at elevated ambient temperature can result in exceeding the maximum allowed junction temperature of 150°C. Output currents in excess of 45 mA over long term may adversely affect reliability.

6.6 AC Electrical Characteristics 1.8 V

Unless otherwise specified, all limits specified for T_J = 25°C. V^+ = 1.8 V, V^- = 0 V, V_{CM} = V^+/2, V_O = V^+/2 and R_L > 1 MΩ.

PARAMETER		TEST CONDITIONS	MIN	TYP (1)	MAX	UNIT
SR	Slew Rate	See (2).		0.35		V/µs
GBW	Gain-Bandwidth Product			1.4		MHz
Φ_m	Phase Margin			67		deg
G_m	Gain Margin			7		dB
e_n	Input-Referred Voltage Noise	f = 10 kHz, V_{CM} = 0.5 V		60		nV/√Hz
i_n	Input-Referred Current Noise	f = 10 kHz		0.08		pA/√Hz
THD	Total Harmonic Distortion	f = 1 kHz, A_V = +1 R_L = 600 Ω, V_{IN} = 1 V_{PP}		0.023%		
	Amplifier-to-Amplifier Isolation	See (3)		123		dB

(1) Typical values represent the most likely parametric norm as determined at the time of characterization. Actual typical values may vary over time and will also depend on the application and configuration.
(2) Connected as voltage follower with input step from V^- to V^+. Number specified is the slower of the positive and negative slew rates.
(3) Input referred, R_L = 100 kΩ connected to V^+/2. Each amplifier excited in turn with 1 kHz to produce V_O = 3 V_{PP} (For Supply Voltages < 3 V, V_O = V^+).

6.7 DC Electrical Characteristics 2.7 V

Unless otherwise specified, all limits specified for T_J = 25°C. V^+ = 2.7 V, V^- = 0 V, V_{CM} = V^+/2, V_O = V^+/2 and R_L > 1 MΩ.

PARAMETER		TEST CONDITIONS		MIN	TYP (1)	MAX	UNIT
V_{OS}	Input Offset Voltage	LMV931-N-Q1 (Single)	25°C		1	4	mV
			Full Range			6	
		LMV932-N-Q1 (Dual) LMV934-N-Q1 (Quad)	25°C		1	5.5	mV
			Full Range			7.5	
TCV_{OS}	Input Offset Voltage Average Drift		Full Range		5.5		µV/°C
I_B	Input Bias Current		25°C		15	35	nA
			Full Range			50	
I_{OS}	Input Offset Current		25°C		8	25	nA
			Full Range			40	
I_S	Supply Current (per channel)		25°C		105	190	µA
			Full Range			210	

(1) Typical values represent the most likely parametric norm as determined at the time of characterization. Actual typical values may vary over time and will also depend on the application and configuration.

Copyright © 2017, Texas Instruments Incorporated

DC Electrical Characteristics 2.7 V (continued)

Unless otherwise specified, all limits specified for T_J = 25°C. V^+ = 2.7 V, V^- = 0 V, V_{CM} = $V^+/2$, V_O = $V^+/2$ and R_L > 1 MΩ.

PARAMETER		TEST CONDITIONS		MIN	TYP (1)	MAX	UNIT
CMRR	Common-Mode Rejection Ratio	LMV931-N-Q1, 0 ≤ V_{CM} ≤ 1.5 V 2.3 V ≤ V_{CM} ≤ 2.7 V(2)	25°C	60	81		dB
			Full Range	55			
		LMV932-N-Q1 and LMV934-N-Q1 0 ≤ V_{CM} ≤ 1.5 V 2.3 V ≤ V_{CM} ≤ 2.7 V(2)	25°C	55	80		dB
			Full Range	50			
		−0.2 V ≤ V_{CM} ≤ 0 V 2.7 V ≤ V_{CM} ≤ 2.9 V	25°C	50	74		dB
PSRR	Power Supply Rejection Ratio	1.8 V ≤ V^+ ≤ 5 V V_{CM} = 0.5 V	25°C	75	100		dB
			Full Range	70			
V_{CM}	Input Common-Mode Voltage Range	For CMRR Range ≥ 50 dB	25°C	V^- − 0.2	−0.2 to 3.0	V^+ + 0.2	V
			−40°C to 85°C	V^-		V^+	
			125°C	V^- + 0.2		V^+ − 0.2	
A_V	Large Signal Voltage Gain LMV931-N-Q1 (Single)	R_L = 600 Ω to 1.35 V, V_O = 0.2 V to 2.5 V	25°C	87	104		dB
			Full Range	86			
		R_L = 2 kΩ to 1.35 V, V_O = 0.2 V to 2.5 V	25°C	92	110		dB
			Full Range	91			
	Large Signal Voltage Gain LMV932-N-Q1 (Dual) LMV934-N-Q1 (Quad)	R_L = 600 Ω to 1.35 V, V_O = 0.2 V to 2.5 V	25°C	78	90		dB
			Full Range	75			
		R_L = 2 kΩ to 1.35 V, V_O = 0.2 V to 2.5 V	25°C	81	100		dB
			Full Range	78			
V_O	Output Swing LMV931-N-Q1 (Single)	R_L = 600 Ω to 1.35 V V_{IN} = ±100 mV	25°C	2.55	2.62		V
					0.083	0.110	
			Full Range	2.53		0.130	
		R_L = 2 kΩ to 1.35 V V_{IN} = ±100 mV	25°C	2.65	2.675		V
					0.025	0.04	
			Full Range	2.64		0.045	
V_O	Output Swing LMV932-N-Q1 (Dual) LMV934-N-Q1 (Quad)	R_L = 600 Ω to 1.35 V V_{IN} = ±100 mV	25°C	2.55	2.62		V
					0.083	0.110	
			Full Range	2.53		0.187	
		R_L = 2 kΩ to 1.35 V V_{IN} = ±100 mV	25°C	2.65	2.675		V
					0.025	0.04	
			Full Range	2.64		0.059	
I_O	Output Short Circuit Current(3)	Sourcing, V_O = 0 V V_{IN} = +100 mV	25°C	20	30		mA
			Full Range	15			
		Sinking, V_O = 2.7 V V_{IN} = −100 mV	25°C	18	25		mA
			Full Range	12			

(2) For specified temperature ranges, see the CMVR parameter in *DC Electrical Characteristics 1.8 V* for the input common-mode voltage specifications.
(3) Applies to both single-supply and split-supply operation. Continuous short circuit operation at elevated ambient temperature can result in exceeding the maximum allowed junction temperature of 150°C. Output currents in excess of 45 mA over long term may adversely affect reliability.

Copyright © 2017, Texas Instruments Incorporated

6.8 AC Electrical Characteristics 2.7 V

Unless otherwise specified, all limits specified for T_J = 25°C. V^+ = 2.7 V, V^- = 0 V, V_{CM} = 1.0 V, V_O = 1.35 V and R_L > 1 MΩ.

PARAMETER		TEST CONDITIONS	MIN	TYP (1)	MAX	UNIT
SR	Slew Rate	See (2)		0.4		V/µs
		See (2), LMV932-N-Q1 Only		0.36		V/µs
GBW	Gain-Bandwidth Product			1.4		MHz
Φ_m	Phase Margin			70		deg
G_m	Gain Margin			7.5		dB
e_n	Input-Referred Voltage Noise	f = 10 kHz, V_{CM} = 0.5 V		57		nV/√Hz
i_n	Input-Referred Current Noise	f = 10 kHz		0.08		pA/√Hz
THD	Total Harmonic Distortion	f = 1 kHz, A_V = +1 R_L = 600 Ω, V_{IN} = 1 V_{PP}		0.022%		
	Amp-to-Amp Isolation	See (3)		123		dB

(1) Typical values represent the most likely parametric norm as determined at the time of characterization. Actual typical values may vary over time and will also depend on the application and configuration.
(2) Connected as voltage follower with input step from V^- to V^+. Number specified is the slower of the positive and negative slew rates.
(3) Input referred, R_L = 100 kΩ connected to $V^+/2$. Each amplifier excited in turn with 1 kHz to produce V_O = 3 V_{PP} (For Supply Voltages < 3 V, V_O = V^+).

Copyright © 2017, Texas Instruments Incorporated

6.9 Electrical Characteristics 5 V DC

Unless otherwise specified, all limits specified for T_J = 25°C. V^+ = 5 V, V^- = 0 V, V_{CM} = V^+/2, V_O = V^+/2 and R_L > 1 MΩ.

PARAMETER		TEST CONDITIONS		MIN	TYP (1)	MAX	UNIT
V_{OS}	Input Offset Voltage	LMV931-N-Q1 (Single)	25°C		1	4	mV
			Full Range			6	
		LMV932-N-Q1 (Dual) LMV934-N-Q1 (Quad)	25°C		1	5.5	mV
			Full Range			7.5	
TCV_{OS}	Input Offset Voltage Average Drift				5.5		μV/°C
I_B	Input Bias Current		25°C		14	35	nA
			Full Range			50	
I_{OS}	Input Offset Current		25°C		9	25	nA
			Full Range			40	
I_S	Supply Current (per channel)		25°C		116	210	μA
			Full Range			230	
CMRR	Common-Mode Rejection Ratio	0 ≤ V_{CM} ≤ 3.8 V 4.6 V ≤ V_{CM} ≤ 5.0 V (2)	25°C	60	86		dB
			Full Range	55			
		−0.2 V ≤ V_{CM} ≤ 0 V 5.0 V ≤ V_{CM} ≤ 5.2 V	25°C	50	78		dB
PSRR	Power Supply Rejection Ratio	1.8 V ≤ V^+ ≤ 5 V V_{CM} = 0.5 V	25°C	75	100		dB
			Full Range	70			
CMVR	Input Common-Mode Voltage Range	For CMRR Range ≥ 50 dB	25°C	V^- − 0.2	−0.2 to 5.3	V^+ + 0.2	V
			−40°C to 85°C	V^-		V^+	
			125°C	V^- + 0.3		V^+ − 0.3	
A_V	Large Signal Voltage Gain LMV931-N-Q1 (Single)	R_L = 600 Ω to 2.5 V, V_O = 0.2 V to 4.8 V	25°C	88	102		dB
			Full Range	87			
		R_L = 2 kΩ to 2.5 V, V_O = 0.2 V to 4.8 V	25°C	94	113		dB
			Full Range	93			
	Large Signal Voltage Gain LMV932-N-Q1 (Dual) LMV934-N-Q1 (Quad)	R_L = 600 Ω to 2.5 V, V_O = 0.2 V to 4.8 V	25°C	81	90		dB
			Full Range	78			
		R_L = 2 kΩ to 2.5 V, V_O = 0.2 V to 4.8 V	25°C	85	100		dB
			Full Range	82			
V_O	Output Swing LMV931-N-Q1 (Single)	R_L = 600 Ω to 2.5 V V_{IN} = ±100 mV	25°C	4.855	4.890		V
					0.120	0.160	
			Full Range	4.835		0.180	
		R_L = 2 kΩ to 2.5 V V_{IN} = ±100 mV	25°C	4.945	4.967		V
					0.037	0.065	
			Full Range	4.935		0.075	
V_O	Output Swing LMV932-N-Q1 (Dual) LMV934-N-Q1 (Quad)	R_L = 600 Ω to 2.5 V V_{IN} = ±100 mV	25°C	4.855	4.890		V
					0.120	0.160	
			Full Range	4.807		0.218	
		R_L = 2 kΩ to 2.5 V V_{IN} = ±100 mV	25°C	4.945	4.967		V
					0.037	0.065	
			Full Range	4.935		0.075	

(1) Typical values represent the most likely parametric norm as determined at the time of characterization. Actual typical values may vary over time and will also depend on the application and configuration.
(2) For specified temperature ranges, see the CMVR parameter in *DC Electrical Characteristics 1.8 V* for the input common-mode voltage specifications.

Copyright © 2017, Texas Instruments Incorporated

Electrical Characteristics 5 V DC (continued)

Unless otherwise specified, all limits specified for T_J = 25°C. V^+ = 5 V, V^- = 0 V, V_{CM} = $V^+/2$, V_O = $V^+/2$ and R_L > 1 MΩ.

PARAMETER		TEST CONDITIONS		MIN	TYP (1)	MAX	UNIT
I_O	Output Short Circuit Current (3)	LMV931-N-Q1, Sourcing, V_O = 0 V, V_{IN} = +100 mV	25°C	80	100		mA
			Full Range	68			
		Sinking, V_O = 5 V, V_{IN} = −100 mV	25°C	58	65		mA
			Full Range	45			

(3) Applies to both single-supply and split-supply operation. Continuous short circuit operation at elevated ambient temperature can result in exceeding the maximum allowed junction temperature of 150°C. Output currents in excess of 45 mA over long term may adversely affect reliability.

6.10 AC Electrical Characteristics 5 V

Unless otherwise specified, all limits specified for T_J = 25°C. V^+ = 5 V, V^- = 0 V, V_{CM} = $V^+/2$, V_O = 2.5 V and R_L > 1 MΩ.

PARAMETER		TEST CONDITIONS	MIN	TYP (1)	MAX	UNIT
SR	Slew Rate	See .(2)		0.42		V/µs
		See .(2), LMV932-N-Q1 Only		0.48		V/µs
GBW	Gain-Bandwidth Product			1.5		MHz
Φ_m	Phase Margin			71		deg
G_m	Gain Margin			8		dB
e_n	Input-Referred Voltage Noise	f = 10 kHz, V_{CM} = 1 V		50		nV/√Hz
i_n	Input-Referred Current Noise	f = 10 kHz		0.08		pA/√Hz
THD	Total Harmonic Distortion	f = 1 kHz, A_V = 1 R_L = 600 Ω, V_O = 1 V_{PP}		0.022%		
	Amplifier-to-Amplifier Isolation	See (3)		123		dB

(1) Typical values represent the most likely parametric norm as determined at the time of characterization. Actual typical values may vary over time and will also depend on the application and configuration.
(2) Connected as voltage follower with input step from V^- to V^+. Number specified is the slower of the positive and negative slew rates.
(3) Input referred, R_L = 100 kΩ connected to $V^+/2$. Each amplifier excited in turn with 1 kHz to produce V_O = 3 V_{PP} (For Supply Voltages < 3 V, V_O = V^+).

Copyright © 2017, Texas Instruments Incorporated

6.11 Typical Characteristics

Unless otherwise specified, V_S = 5 V, single-supply, T_A = 25°C.

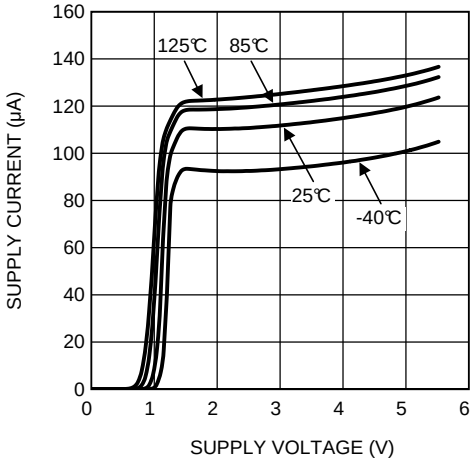

Figure 1. Supply Current vs. Supply Voltage (LMV931-N)

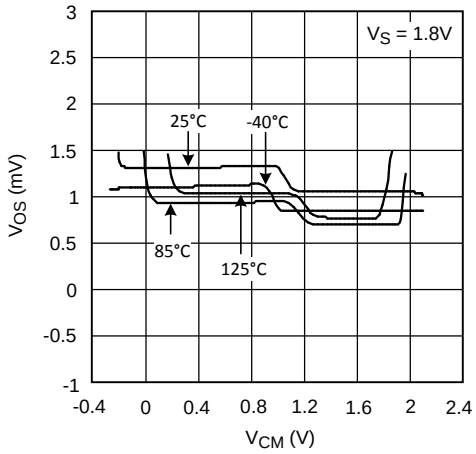

Figure 2. Offset Voltage vs. Common-Mode Range

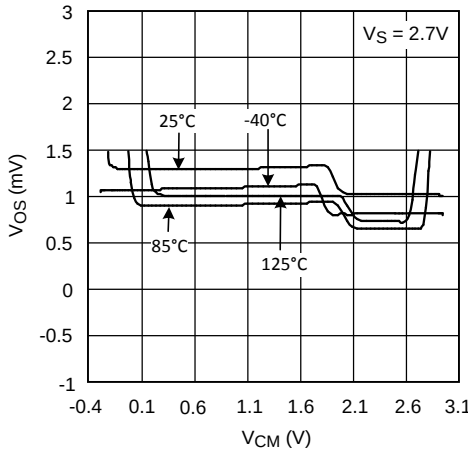

Figure 3. Offset Voltage vs. Common-Mode Range

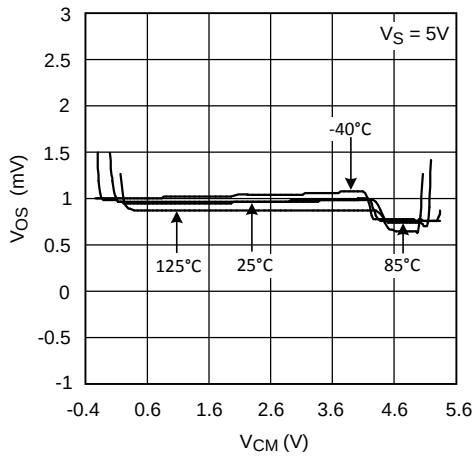

Figure 4. Offset Voltage vs. Common-Mode Range

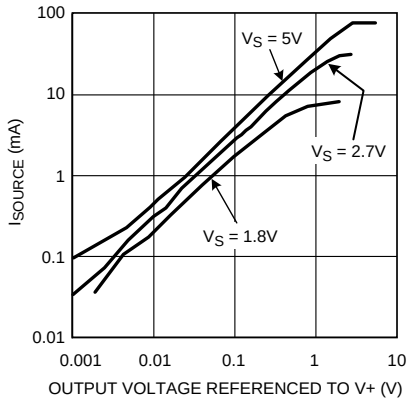

Figure 5. Sourcing Current vs. Output Voltage

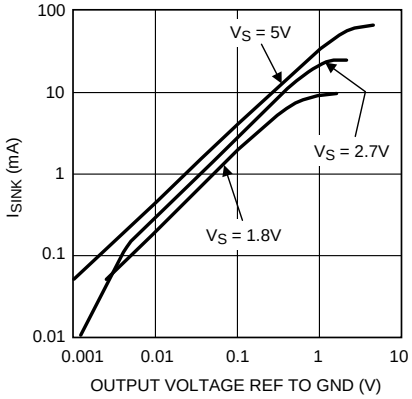

Figure 6. Sinking Current vs. Output Voltage

Typical Characteristics (continued)

Unless otherwise specified, V_S = 5 V, single-supply, T_A = 25°C.

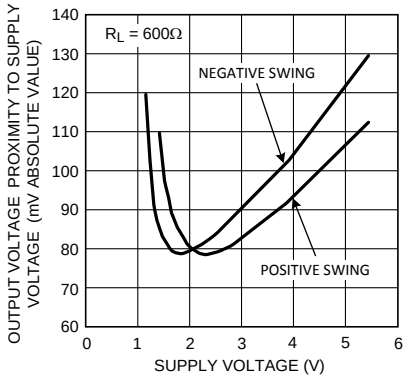

Figure 7. Output Voltage Swing vs. Supply Voltage

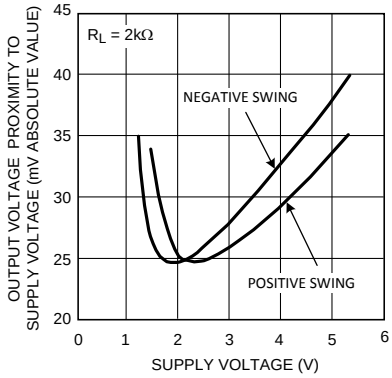

Figure 8. Output Voltage Swing vs. Supply Voltage

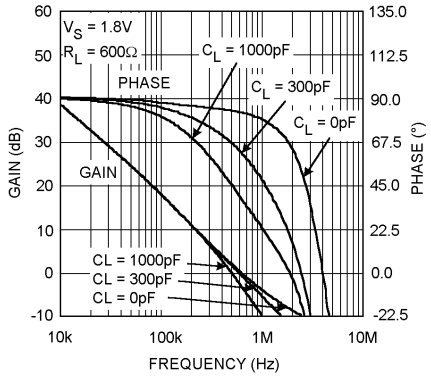

Figure 9. Gain and Phase vs. Frequency

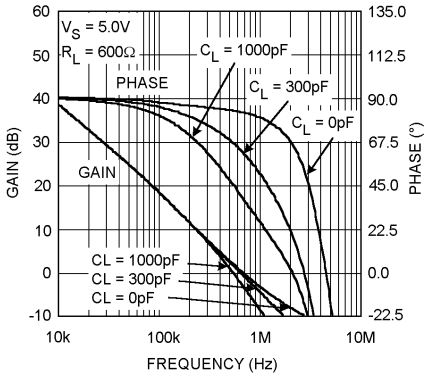

Figure 10. Gain and Phase vs. Frequency

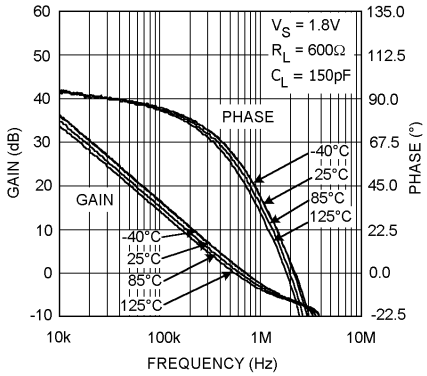

Figure 11. Gain and Phase vs. Frequency

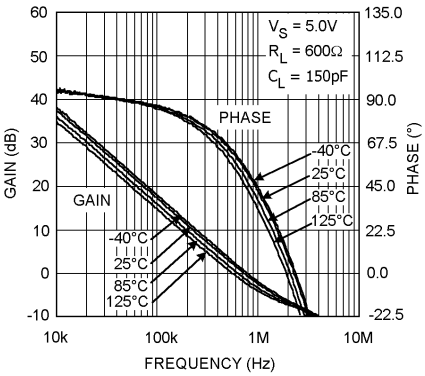

Figure 12. Gain and Phase vs. Frequency

Copyright © 2017, Texas Instruments Incorporated

Typical Characteristics (continued)

Unless otherwise specified, V_S = 5 V, single-supply, T_A = 25°C.

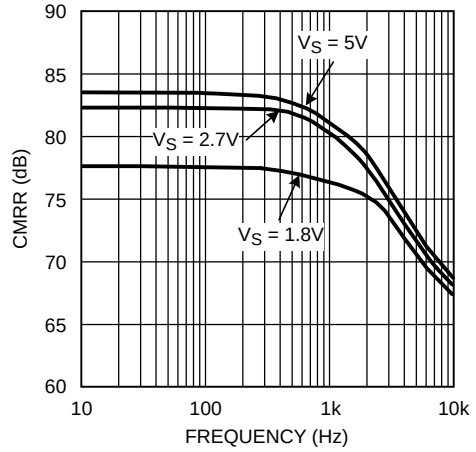

Figure 13. CMRR vs. Frequency

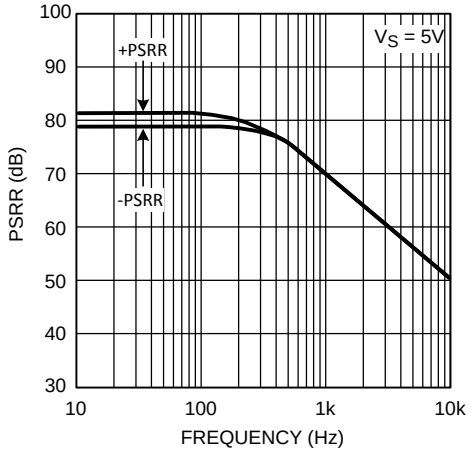

Figure 14. PSRR vs. Frequency

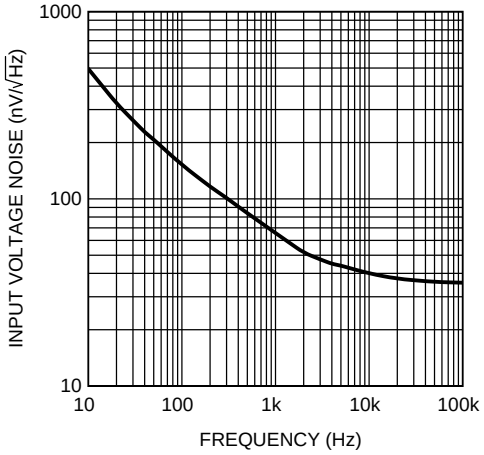

Figure 15. Input Voltage Noise vs. Frequency

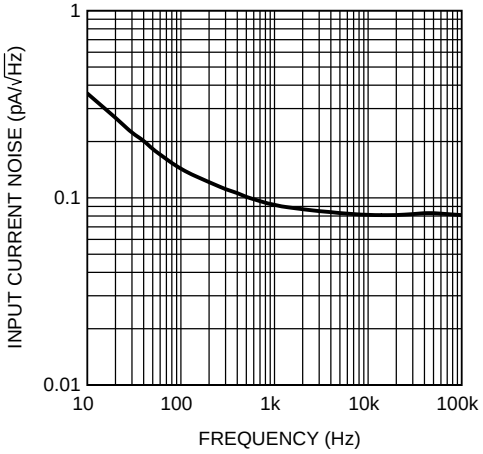

Figure 16. Input Current Noise vs. Frequency

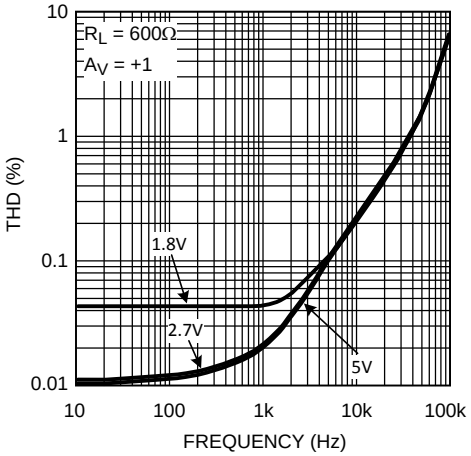

Figure 17. THD vs. Frequency

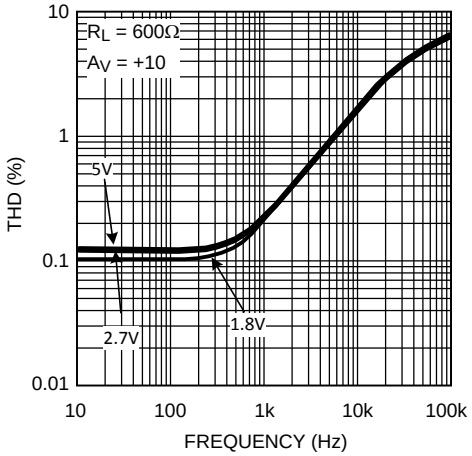

Figure 18. THD vs. Frequency

Copyright © 2017, Texas Instruments Incorporated

Typical Characteristics (continued)

Unless otherwise specified, V_S = 5 V, single-supply, T_A = 25°C.

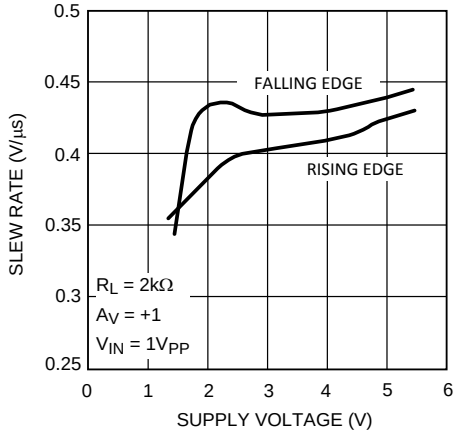

Figure 19. Slew Rate vs. Supply Voltage LMV931-N-Q1 and LMV934-N-Q1

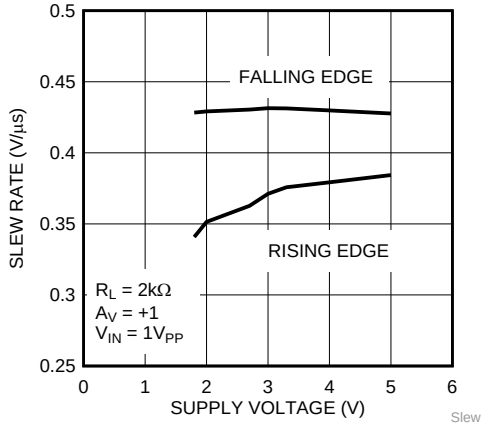

Figure 20. Slew Rate vs. Supply Voltage LMV932-N-Q1 Only

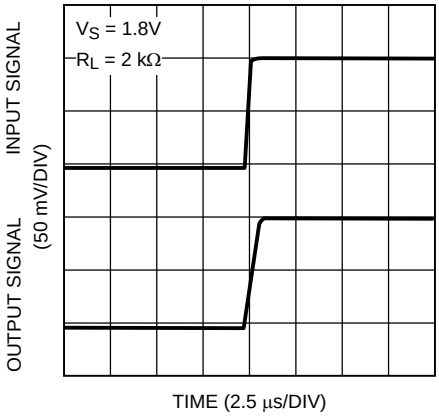

Figure 21. Small Signal Noninverting Response

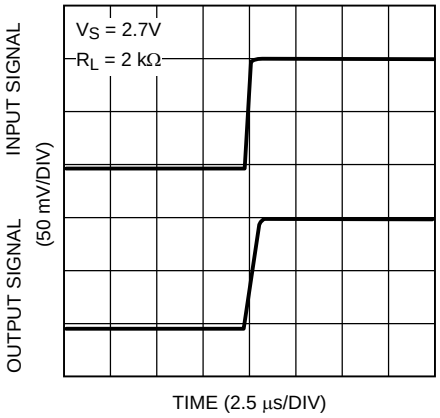

Figure 22. Small Signal Noninverting Response

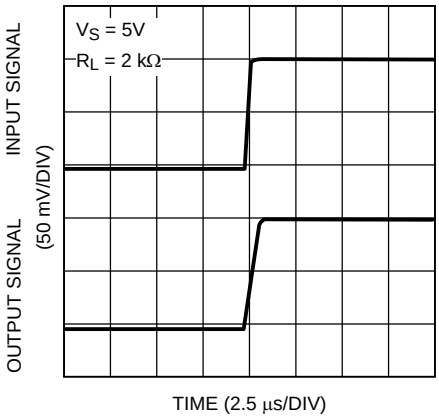

Figure 23. Small Signal Noninverting Response

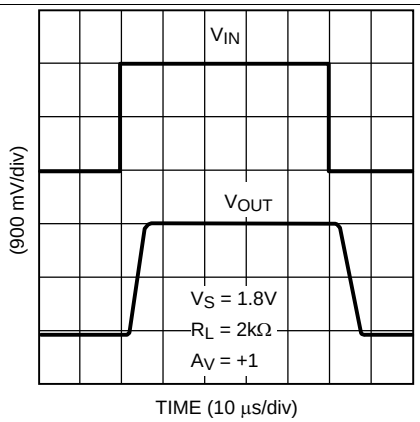

Figure 24. Large Signal Noninverting Response

Copyright © 2017, Texas Instruments Incorporated

Typical Characteristics (continued)

Unless otherwise specified, V_S = 5 V, single-supply, T_A = 25°C.

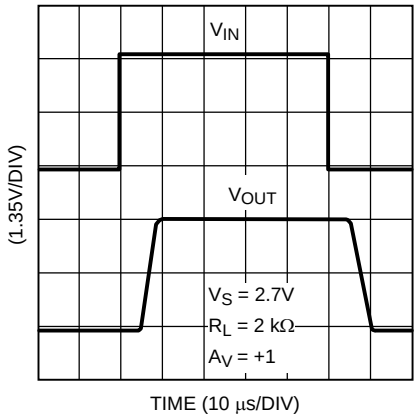

Figure 25. Large Signal Noninverting Response

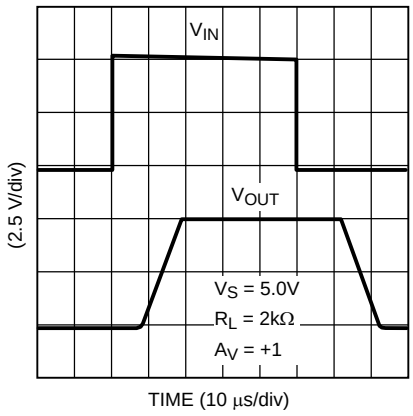

Figure 26. Large Signal Noninverting Response

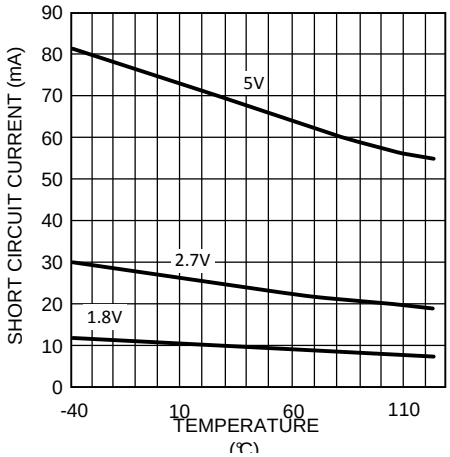

Figure 27. Short Circuit Current vs. Temperature (Sinking)

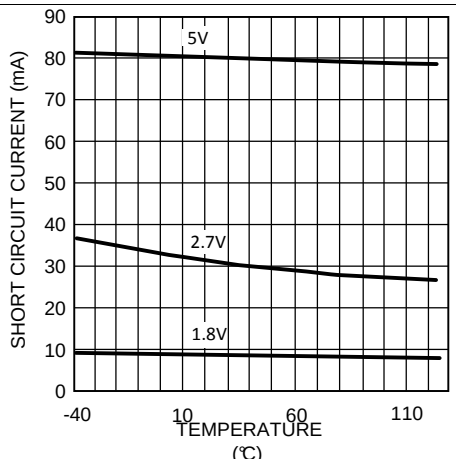

Figure 28. Short Circuit Current vs. Temperature (Sourcing)

7 Detailed Description

7.1 Overview

The LMV93x-Q1-N are low-voltage, low-power operational amplifiers (op-amp) operating from 1.8-V to 5.5-V supply voltages and have rail-to-rail input and output. LMV93x-Q1-N input common-mode voltage extends 200 mV beyond the supplies which enables user enhanced functionality beyond the supply voltage range.

7.2 Functional Block Diagram

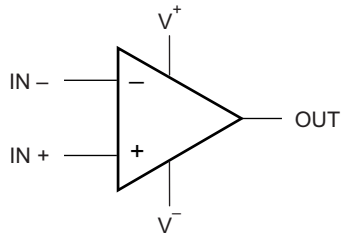

Copyright © 2016,
Texas Instruments Incorporated

(Each Amplifier)

7.3 Feature Description

The differential inputs of the amplifier consist of a noninverting input (+IN) and an inverting input (–IN). The amplifer amplifies only the difference in voltage between the two inputs, which is called the differential input voltage. The output voltage of the op-amp V_{OUT} is given by Equation 1:

$$V_{OUT} = A_{OL} (IN^{+} - IN^{-})$$

where

- A_{OL} is the open-loop gain of the amplifier, typically around 100 dB (100,000x, or 10 µV per volt). (1)

7.4 Device Functional Modes

7.4.1 Input and Output Stage

The rail-to-rail input stage of this family provides more flexibility for the designer. The LMV93x-Q1-N use a complimentary PNP and NPN input stage in which the PNP stage senses common-mode voltage near V^{-} and the NPN stage senses common-mode voltage near V^{+}. The transition from the PNP stage to NPN stage occurs 1 V below V^{+}. Because both input stages have their own offset voltage, the offset of the amplifier becomes a function of the input common-mode voltage and has a crossover point at 1 V below V^{+}.

Copyright © 2017, Texas Instruments Incorporated

Device Functional Modes (continued)

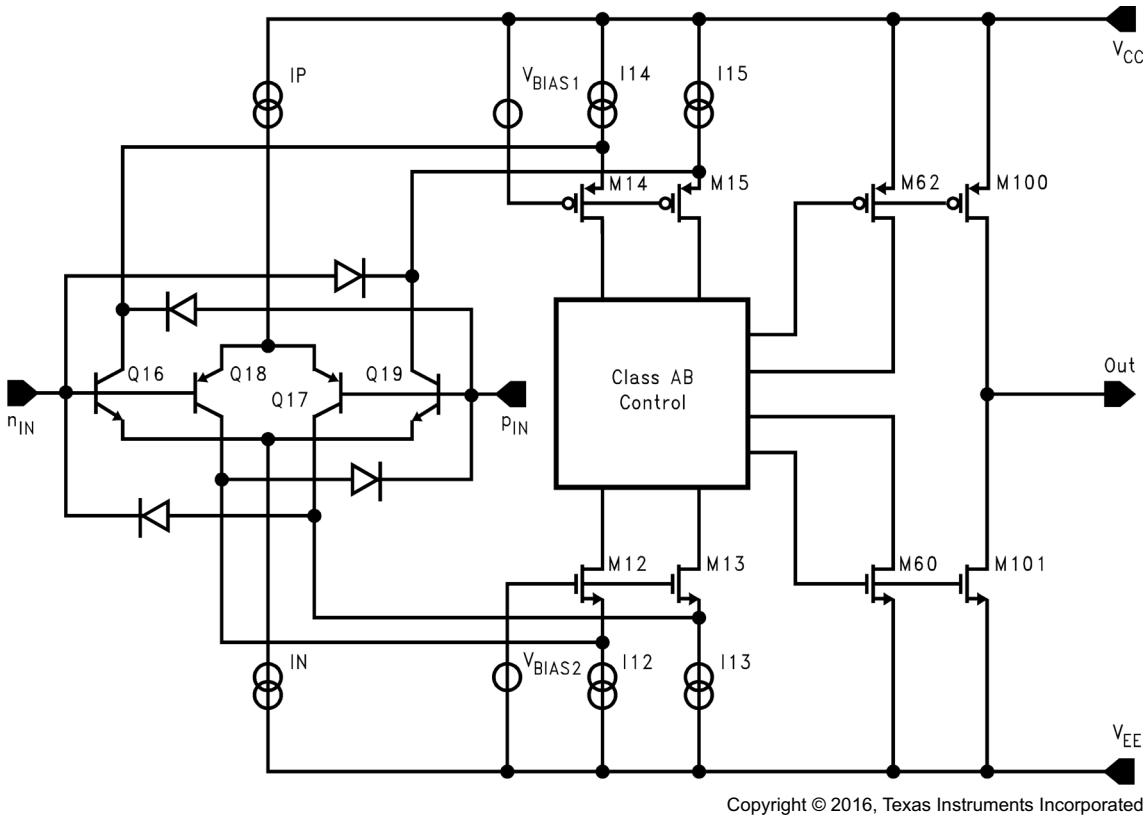

Figure 29. Simplified Schematic Diagram

This V_{OS} crossover point can create problems for both DC− and AC-coupled signals if proper care is not taken. Large input signals that include the V_{OS} crossover point will cause distortion in the output signal. One way to avoid such distortion is to keep the signal away from the crossover. For example, in a unity gain buffer configuration with V_S = 5 V, a 5-V peak-to-peak signal will contain input-crossover distortion while a 3-V peak-to-peak signal centered at 1.5 V will not contain input-crossover distortion as it avoids the crossover point. Another way to avoid large signal distortion is to use a gain of −1 circuit which avoids any voltage excursions at the input terminals of the amplifier. In that circuit, the common-mode DC voltage can be set at a level away from the V_{OS} cross-over point. For small signals, this transition in V_{OS} shows up as a V_{CM} dependent spurious signal in series with the input signal and can effectively degrade small signal parameters such as gain and common-mode rejection ratio. To resolve this problem, the small signal should be placed such that it avoids the V_{OS} crossover point. In addition to the rail-to-rail performance, the output stage can provide enough output current to drive 600-Ω loads. Because of the high-current capability, take care not to exceed the 150°C maximum junction temperature specification.

7.4.2 Input Bias Current Consideration

The LMV93x-Q1-N family has a complementary bipolar input stage. The typical input bias current (I_B) is 15 nA. The input bias current can develop a significant offset voltage. This offset is primarily due to I_B flowing through the negative feedback resistor, R_F. For example, if I_B is 50 nA and R_F is 100 kΩ, then an offset voltage of 5 mV will develop ($V_{OS} = I_B \times R_F$). Using a compensation resistor (R_C), as shown in Figure 30, cancels this effect. But the input offset current (I_{OS}) will still contribute to an offset voltage in the same manner.

Device Functional Modes (continued)

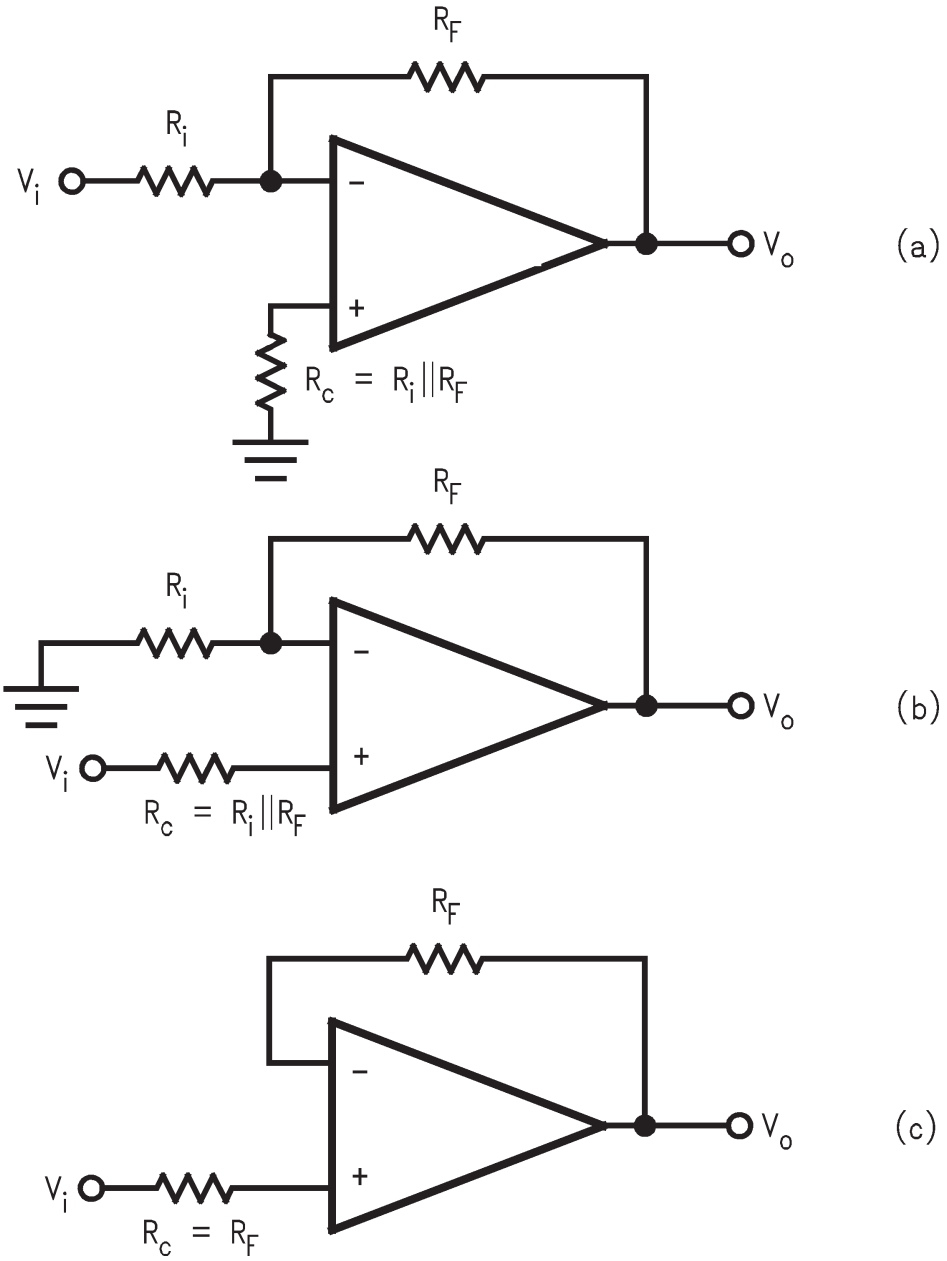

Figure 30. Canceling the Offset Voltage due to Input Bias Current

Copyright © 2017, Texas Instruments Incorporated

8 Application and Implementation

NOTE

Information in the following applications sections is not part of the TI component specification, and TI does not warrant its accuracy or completeness. TI's customers are responsible for determining suitability of components for their purposes. Customers should validate and test their design implementation to confirm system functionality.

8.1 Application Information

The LMV93x-Q1-N devices bring performance, economy and ease-of-use to low-voltage, low-power systems. They provide rail-to-rail input and rail-to-rail output swings into heavy loads.

8.2 Typical Applications

8.2.1 High-Side Current-Sensing Application

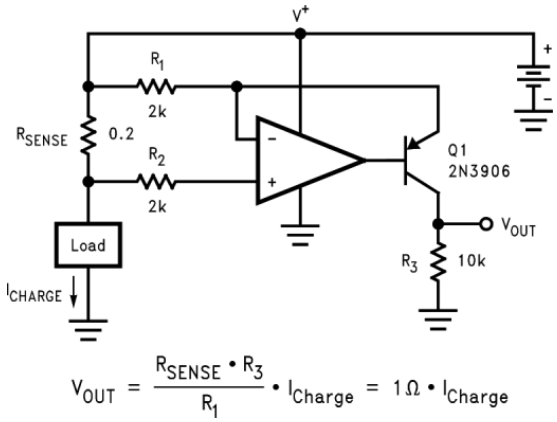

Figure 31. High-Side Current Sensing

8.2.1.1 Design Requirements

The high-side current-sensing circuit (Figure 31) is commonly used in a battery charger to monitor charging current to prevent overcharging. A sense resistor R_{SENSE} is connected to the battery directly. This system requires an op amp with rail-to-rail input. The LMV93x-Q1-N are ideal for this application because its common-mode input range extends up to the positive supply.

8.2.1.1.1 Custom Design With WEBENCH® Tools

Click here to create a custom design using the LMV93x-Q1-N device with the WEBENCH® Power Designer.

1. Start by entering the input voltage (V_{IN}), output voltage (V_{OUT}), and output current (I_{OUT}) requirements.
2. Optimize the design for key parameters such as efficiency, footprint, and cost using the optimizer dial.
3. Compare the generated design with other possible solutions from Texas Instruments.

The WEBENCH Power Designer provides a customized schematic along with a list of materials with real-time pricing and component availability.

In most cases, these actions are available:

- Run electrical simulations to see important waveforms and circuit performance
- Run thermal simulations to understand board thermal performance
- Export customized schematic and layout into popular CAD formats
- Print PDF reports for the design, and share the design with colleagues

Get more information about WEBENCH tools at www.ti.com/WEBENCH.

Copyright © 2017, Texas Instruments Incorporated

Typical Applications (continued)

8.2.1.2 Detailed Design Procedure

As seen in Figure 31, the I_{CHARGE} current flowing through sense resistor R_{SENSE} develops a voltage drop equal to V_{SENSE}. The voltage at the negative sense point will now be less than the positive sense point by an amount proportional to the V_{SENSE} voltage.

The low-bias currents of the LMV93x-Q1-Q1 cause little voltage drop through R_2, so the negative input of the LMV93x-Q1 amplifier is at essentially the same potential as the negative sense input.

The LMV93x-Q1 will detect this voltage error between its inputs and servo the transistor base to conduct more current through Q1, increasing the voltage drop across R_1 until the LMV93x-Q1 inverting input matches the noninverting input. At this point, the voltage drop across R_1 now matches V_{SENSE}.

I_G, a current proportional to I_{CHARGE}, will flow according to the following relation:

$$I_G = V_{RSENSE} / R_1 = (R_{SENSE} * I_{CHARGE}) / R_1 \quad (2)$$

I_G also flows through the gain resistor R_3 developing a voltage drop equal to:

$$V_3 = I_G * R_3 = (V_{RSENSE} / R_1) * R_3 = ((R_{SENSE} * I_{CHARGE}) / R_2) * R_3 \quad (3)$$

$$V_{OUT} = (R_{SENSE} * I_{CHARGE}) * G$$

where

- $G = R_3 / R_1$ (4)

The other channel of the LMV93x-Q1 may be used to buffer the voltage across R3 to drive the following stages.

8.2.1.3 Application Curve

Figure 32 shows the results of the example current sense circuit.

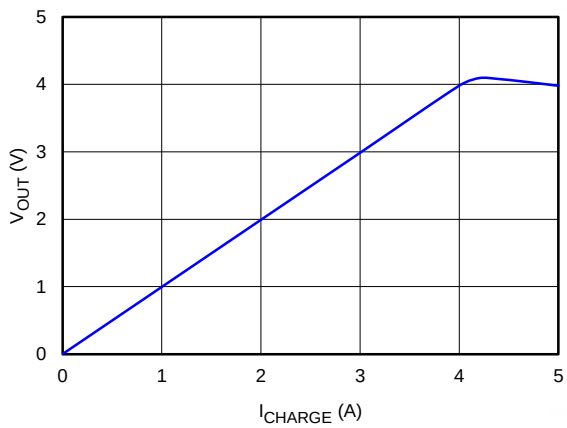

NOTE: the error after 4 V where transistor Q1 runs out of headroom and saturates, limiting the upper output swing.

Figure 32. Current Sense Amplifier Results

Copyright © 2017, Texas Instruments Incorporated

Typical Applications (continued)

8.2.2 Half-Wave Rectifier Applications

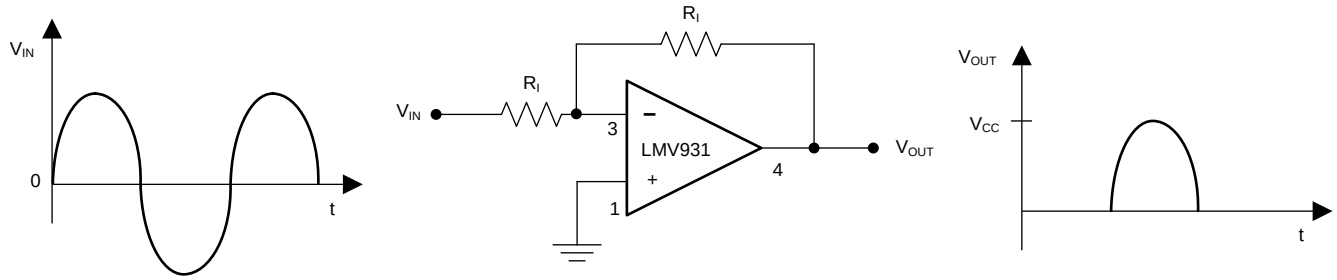

Figure 33. Half-Wave Rectifier With Rail-To-Ground Output Swing Referenced to Ground

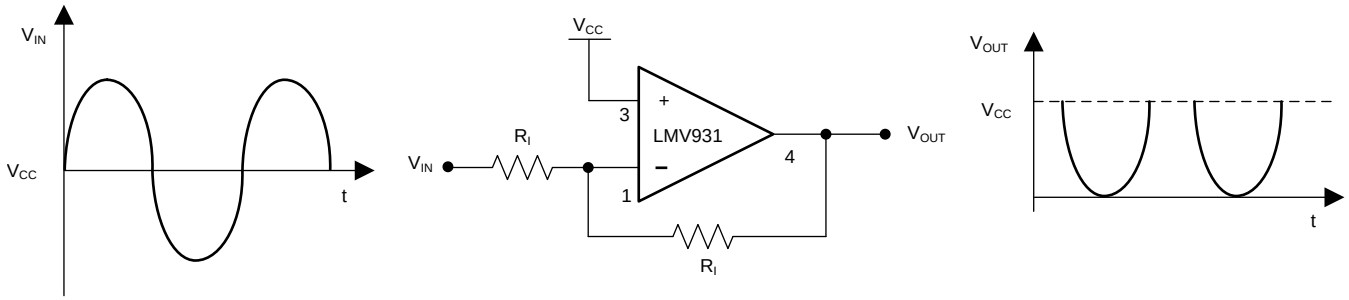

Figure 34. Half-Wave Rectifier With Negative-Going Output Referenced to V_{CC}

8.2.2.1 Design Requirements

Because the LMV931-N-Q1, LMV932-N-Q1, LMV934-N-Q1 input common-mode range includes both positive and negative supply rails and the output can also swing to either supply, achieving half-wave rectifier functions in either direction is an easy task. All that is needed are two external resistors; there is no need for diodes or matched resistors. The half-wave rectifier can have either positive or negative going outputs, depending on the way the circuit is arranged.

8.2.2.2 Detailed Design Procedure

In Figure 33 the circuit is referenced to ground, while in Figure 34 the circuit is biased to the positive supply. These configurations implement the half-wave rectifier because the LMV93x-Q1-N can not respond to one-half of the incoming waveform. It can not respond to one-half of the incoming because the amplifier cannot swing the output beyond either rail therefore the output disengages during this half cycle. During the other half cycle, however, the amplifier achieves a half wave that can have a peak equal to the total supply voltage. R_I should be large enough not to load the LMV93x-Q1-N.

8.2.2.3 Application Curve

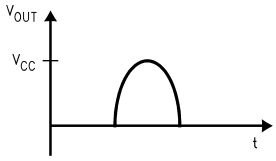

Figure 35. Output of Ground-to-Rail Circuit

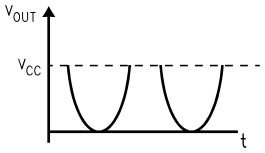

Figure 36. Output of Rail-to-Ground Circuit

Copyright © 2017, Texas Instruments Incorporated

Typical Applications (continued)

8.2.3 Instrumentation Amplifier With Rail-to-Rail Input and Output Application

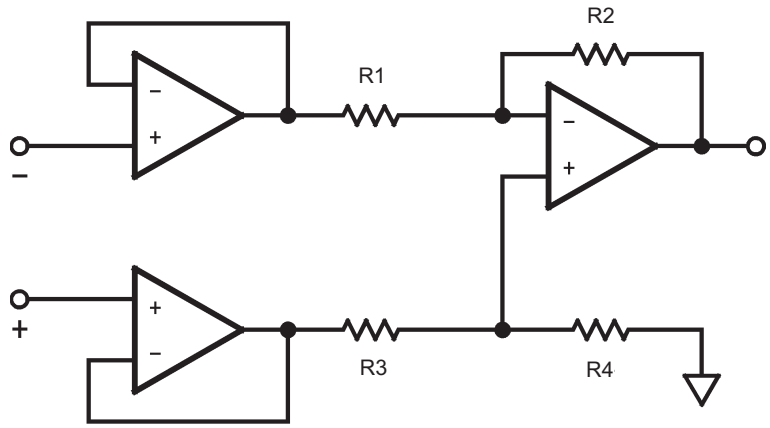

Figure 37. Rail-to-Rail Instrumentation Amplifier

8.2.3.1 Design Requirements

Using three of the LMV93x-Q1-N amplifiers, an instrumentation amplifier with rail-to-rail inputs and outputs can be made as shown in Figure 37.

8.2.3.2 Detailed Design Procedure

In this example, amplifiers on the left side act as buffers to the differential stage. These buffers assure that the input impedance is very high. They also assure that the difference amp is driven from a voltage source. This is necessary to maintain the CMRR set by the matching R_1-R_2 with R_3-R_4. The gain is set by the ratio of R_2 / R_1 and R_3 must equal R_1 and R_4 equal R_2. With both rail-to-rail input and output ranges, the input and output are only limited by the supply voltages. Remember that even with rail-to-rail outputs, the output can not swing past the supplies so the combined common-mode voltages plus the signal must not be greater that the supplies or limiting will occur.

8.2.3.3 Application Curve

Figure 38 shows the results of the instrumentation amplifier with R_1 and R_3 = 1 K, and R_2 and R_4 = 100 kΩ, for a gain of 100, running on a single 5-V supply with a input of V_{CM} = V_S/2. The combined effects of the individual offset voltages can be seen as a shift in the offset of the curve.

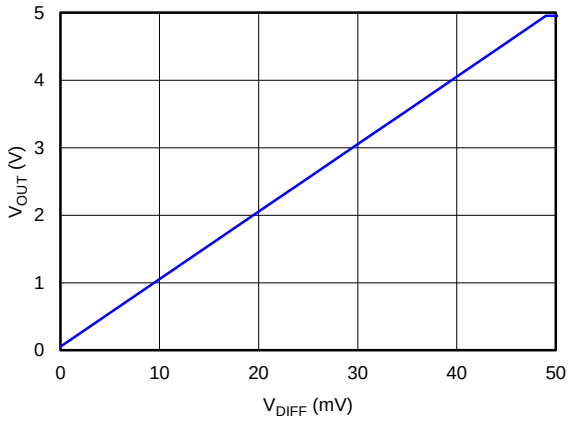

Figure 38. Instrumentation Amplifier Output Results

Copyright © 2017, Texas Instruments Incorporated

8.3 Dos and Don'ts

Do properly bypass the power supplies.

Do add series resistence to the output when driving capacitive loads, particularly cables, Muxes and ADC inputs.

Do add series current limiting resistors and external schottky clamp diodes if input voltage is expected to exceed the supplies. Limit the current to 1 mA or less (1 kΩ per volt).

9 Power Supply Recommendations

For proper operation, the power supplies must be properly decoupled. For decoupling the supply lines, TI recommends that 10-nF capacitors be placed as close as possible to the op amp power supply pins. For single-supply, place a capacitor between V^+ and V^- supply leads. For dual supplies, place one capacitor between V^+ and ground, and one capacitor between V^- and ground.

Copyright © 2017, Texas Instruments Incorporated

10 Layout

10.1 Layout Guidelines

The V^+ pin must be bypassed to ground with a low-ESR capacitor.

The optimum placement is closest to the V^+ and ground pins.

Take care to minimize the loop area formed by the bypass capacitor connection between V^+ and ground.

The ground pin must be connected to the PCB ground plane at the pin of the device.

The feedback components should be placed as close as possible to the device minimizing strays.

10.2 Layout Example

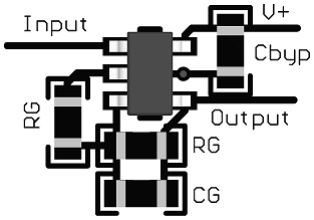

Figure 39. SOT-23 Layout Example

Copyright © 2017, Texas Instruments Incorporated

11 デバイスおよびドキュメントのサポート

11.1 デバイス・サポート

11.1.1 WEBENCH®ツールによるカスタム設計

ここをクリックすると、WEBENCH® Power Designerにより、LMV93x-N-Q1デバイスを使用するカスタム設計を作成できます。

1. 最初に、入力電圧(V_{IN})、出力電圧(V_{OUT})、出力電流(I_{OUT})の要件を入力します。
2. オプティマイザのダイヤルを使用して、効率、占有面積、コストなどの主要なパラメータについて設計を最適化します。
3. 生成された設計を、テキサス・インスツルメンツが提供する他のソリューションと比較します。

WEBENCH Power Designerでは、カスタマイズされた回路図と部品リストを、リアルタイムの価格と部品の在庫情報と併せて参照できます。

ほとんどの場合、次の操作を実行可能です。

- 電気的なシミュレーションを実行し、重要な波形と回路の性能を確認する。
- 熱シミュレーションを実行し、基板の熱特性を把握する。
- カスタマイズされた回路図やレイアウトを、一般的なCADフォーマットでエクスポートする。
- 設計のレポートをPDFで印刷し、同僚と設計を共有する。

WEBENCHツールの詳細は、www.ti.com/WEBENCHでご覧になれます。

11.1.2 開発サポート

LMV931 PSPICEモデル (LMV931-N-Q1、LMV932-N-Q1、LMV934-N-Q1にも適用可能)、http://www.ti.com/lit/zip/snom028

TINA-TI SPICEベースのアナログ・シミュレーション・プログラム、http://www.ti.com/tool/tina-ti

DIPアダプタ評価モジュール、http://www.ti.com/tool/dip-adapter-evm

TIユニバーサル・オペアンプ評価モジュール、http://www.ti.com/tool/opampevm

TI Filterproソフトウェア、http://www.ti.com/tool/filterpro

11.2 ドキュメントのサポート

11.2.1 関連資料

追加アプリケーションについては、次の資料を参照してください。

『AN-31オペアンプ回路コレクション』

11.3 関連リンク

表 1 に、クイック・アクセス・リンクの一覧を示します。カテゴリには、技術資料、サポートおよびコミュニティ・リソース、ツールとソフトウェア、およびご注文へのクイック・アクセスが含まれます。

表 1. 関連リンク

製品	プロダクト・フォルダ	ご注文はこちら	技術資料	ツールとソフトウェア	サポートとコミュニティ
LMV931-N-Q1	ここをクリック	ここをクリック	ここをクリック	ここをクリック	ここをクリック
LMV932-N-Q1	ここをクリック	ここをクリック	ここをクリック	ここをクリック	ここをクリック
LMV934-N-Q1	ここをクリック	ここをクリック	ここをクリック	ここをクリック	ここをクリック

11.4 ドキュメントの更新通知を受け取る方法

ドキュメントの更新についての通知を受け取るには、ti.comのデバイス製品フォルダを開いてください。右上の隅にある「*通知を受け取る*」をクリックして登録すると、変更されたすべての製品情報に関するダイジェストを毎週受け取れます。変更の詳細については、修正されたドキュメントに含まれている改訂履歴をご覧ください。

Copyright © 2017, Texas Instruments Incorporated

11.5 コミュニティ・リソース

The following links connect to TI community resources. Linked contents are provided "AS IS" by the respective contributors. They do not constitute TI specifications and do not necessarily reflect TI's views; see TI's Terms of Use.

TI E2E™オンライン・コミュニティ ***TIのE2E（Engineer-to-Engineer）コミュニティ。***エンジニア間の共同作業を促進するために開設されたものです。e2e.ti.comでは、他のエンジニアに質問し、知識を共有し、アイディアを検討して、問題解決に役立てることができます。

設計サポート ***TIの設計サポート*** 役に立つE2Eフォーラムや、設計サポート・ツールをすばやく見つけることができます。技術サポート用の連絡先情報も参照できます。

11.6 商標

E2E is a trademark of Texas Instruments.
WEBENCH is a registered trademark of Texas Instruments.
All other trademarks are the property of their respective owners.

11.7 静電気放電に関する注意事項

これらのデバイスは、限定的なESD（静電破壊）保護機能を内 蔵しています。保存時または取り扱い時は、MOSゲートに対す る静電破壊を防止するために、リード線同士をショートさせて おくか、デバイスを導電フォームに入れる必要があります。

11.8 Glossary

SLYZ022 — *TI Glossary*.

This glossary lists and explains terms, acronyms, and definitions.

12 メカニカル、パッケージ、および注文情報

以降のページには、メカニカル、パッケージ、および注文に関する情報が記載されています。この情報は、そのデバイスについて利用可能な最新のデータです。このデータは予告なく変更されることがあり、ドキュメントが改訂される場合もあります。本データシートのブラウザ版を使用されている場合は、画面左側の説明をご覧ください。

Copyright © 2017, Texas Instruments Incorporated

PACKAGING INFORMATION

Orderable part number	Status (1)	Material type (2)	Package | Pins	Package qty | Carrier	RoHS (3)	Lead finish/ Ball material (4)	MSL rating/ Peak reflow (5)	Op temp (°C)	Part marking (6)
LMV931Q1MF/NOPB	Active	Production	SOT-23 (DBV) | 5	1000 | SMALL T&R	Yes	SN	Level-1-260C-UNLIM	-40 to 125	ALAA
LMV931Q1MF/NOPB.A	Active	Production	SOT-23 (DBV) | 5	1000 | SMALL T&R	Yes	SN	Level-1-260C-UNLIM	-40 to 125	ALAA
LMV931Q1MFX/NOPB	Active	Production	SOT-23 (DBV) | 5	3000 | LARGE T&R	Yes	SN	Level-1-260C-UNLIM	-40 to 125	ALAA
LMV931Q1MFX/NOPB.A	Active	Production	SOT-23 (DBV) | 5	3000 | LARGE T&R	Yes	SN	Level-1-260C-UNLIM	-40 to 125	ALAA
LMV931Q1MG/NOPB	Active	Production	SC70 (DCK) | 5	1000 | SMALL T&R	Yes	SN	Level-1-260C-UNLIM	-40 to 125	BBA
LMV931Q1MG/NOPB.A	Active	Production	SC70 (DCK) | 5	1000 | SMALL T&R	Yes	SN	Level-1-260C-UNLIM	-40 to 125	BBA
LMV931Q1MGX/NOPB	Active	Production	SC70 (DCK) | 5	3000 | LARGE T&R	Yes	SN	Level-1-260C-UNLIM	-40 to 125	BBA
LMV931Q1MGX/NOPB.A	Active	Production	SC70 (DCK) | 5	3000 | LARGE T&R	Yes	SN	Level-1-260C-UNLIM	-40 to 125	BBA
LMV932Q1MA/NOPB	Active	Production	SOIC (D) | 8	95 | TUBE	Yes	SN	Level-1-260C-UNLIM	-40 to 125	LMV93 2Q1MA
LMV932Q1MA/NOPB.A	Active	Production	SOIC (D) | 8	95 | TUBE	Yes	SN	Level-1-260C-UNLIM	-40 to 125	LMV93 2Q1MA
LMV932Q1MAX/NOPB	Active	Production	SOIC (D) | 8	2500 | LARGE T&R	Yes	SN	Level-1-260C-UNLIM	-40 to 125	LMV93 2Q1MA
LMV932Q1MAX/NOPB.A	Active	Production	SOIC (D) | 8	2500 | LARGE T&R	Yes	SN	Level-1-260C-UNLIM	-40 to 125	LMV93 2Q1MA
LMV934Q1MT/NOPB	Active	Production	TSSOP (PW) | 14	94 | TUBE	Yes	SN	Level-1-260C-UNLIM	-40 to 125	LMV934 Q1MT
LMV934Q1MT/NOPB.A	Active	Production	TSSOP (PW) | 14	94 | TUBE	Yes	SN	Level-1-260C-UNLIM	-40 to 125	LMV934 Q1MT
LMV934Q1MTX/NOPB	Active	Production	TSSOP (PW) | 14	2500 | LARGE T&R	Yes	SN	Level-1-260C-UNLIM	-40 to 125	LMV934 Q1MT
LMV934Q1MTX/NOPB.A	Active	Production	TSSOP (PW) | 14	2500 | LARGE T&R	Yes	SN	Level-1-260C-UNLIM	-40 to 125	LMV934 Q1MT

(1) **Status:** For more details on status, see our product life cycle.

(2) **Material type:** When designated, preproduction parts are prototypes/experimental devices, and are not yet approved or released for full production. Testing and final process, including without limitation quality assurance, reliability performance testing, and/or process qualification, may not yet be complete, and this item is subject to further changes or possible discontinuation. If available for ordering, purchases will be subject to an additional waiver at checkout, and are intended for early internal evaluation purposes only. These items are sold without warranties of any kind.

(3) **RoHS values:** Yes, No, RoHS Exempt. See the TI RoHS Statement for additional information and value definition.

(4) **Lead finish/Ball material:** Parts may have multiple material finish options. Finish options are separated by a vertical ruled line. Lead finish/Ball material values may wrap to two lines if the finish value exceeds the maximum column width.

(5) **MSL rating/Peak reflow:** The moisture sensitivity level ratings and peak solder (reflow) temperatures. In the event that a part has multiple moisture sensitivity ratings, only the lowest level per JEDEC standards is shown. Refer to the shipping label for the actual reflow temperature that will be used to mount the part to the printed circuit board.

(6) **Part marking:** There may be an additional marking, which relates to the logo, the lot trace code information, or the environmental category of the part.

Multiple part markings will be inside parentheses. Only one part marking contained in parentheses and separated by a "~" will appear on a part. If a line is indented then it is a continuation of the previous line and the two combined represent the entire part marking for that device.

Important Information and Disclaimer: The information provided on this page represents TI's knowledge and belief as of the date that it is provided. TI bases its knowledge and belief on information provided by third parties, and makes no representation or warranty as to the accuracy of such information. Efforts are underway to better integrate information from third parties. TI has taken and continues to take reasonable steps to provide representative and accurate information but may not have conducted destructive testing or chemical analysis on incoming materials and chemicals. TI and TI suppliers consider certain information to be proprietary, and thus CAS numbers and other limited information may not be available for release.

In no event shall TI's liability arising out of such information exceed the total purchase price of the TI part(s) at issue in this document sold by TI to Customer on an annual basis.

OTHER QUALIFIED VERSIONS OF LMV931-N-Q1, LMV932-N-Q1, LMV934-N-Q1 :

- Catalog : LMV931-N, LMV932-N, LMV934-N

NOTE: Qualified Version Definitions:

- Catalog - TI's standard catalog product

TAPE AND REEL INFORMATION

REEL DIMENSIONS

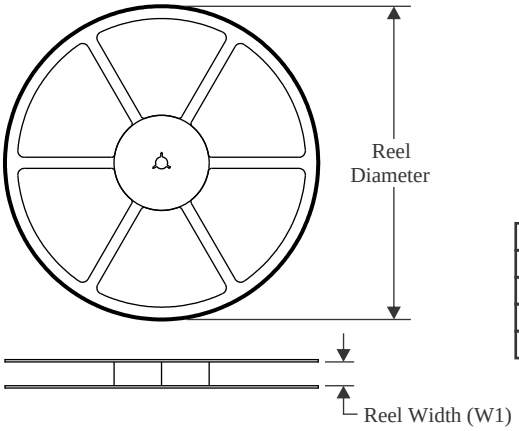

TAPE DIMENSIONS

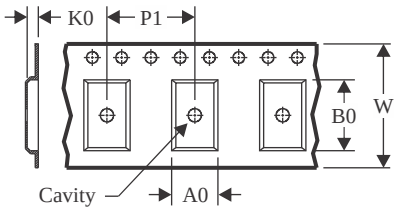

A0	Dimension designed to accommodate the component width
B0	Dimension designed to accommodate the component length
K0	Dimension designed to accommodate the component thickness
W	Overall width of the carrier tape
P1	Pitch between successive cavity centers

QUADRANT ASSIGNMENTS FOR PIN 1 ORIENTATION IN TAPE

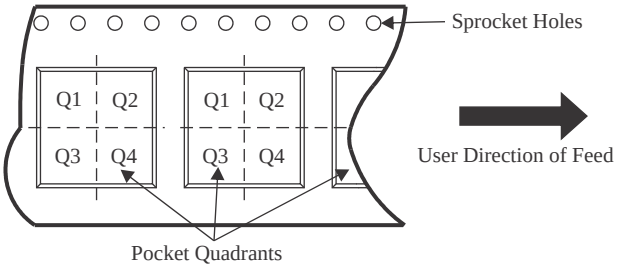

*All dimensions are nominal

Device	Package Type	Package Drawing	Pins	SPQ	Reel Diameter (mm)	Reel Width W1 (mm)	A0 (mm)	B0 (mm)	K0 (mm)	P1 (mm)	W (mm)	Pin1 Quadrant
LMV931Q1MF/NOPB	SOT-23	DBV	5	1000	178.0	8.4	3.2	3.2	1.4	4.0	8.0	Q3
LMV931Q1MFX/NOPB	SOT-23	DBV	5	3000	178.0	8.4	3.2	3.2	1.4	4.0	8.0	Q3
LMV931Q1MG/NOPB	SC70	DCK	5	1000	178.0	8.4	2.25	2.45	1.2	4.0	8.0	Q3
LMV931Q1MGX/NOPB	SC70	DCK	5	3000	178.0	8.4	2.25	2.45	1.2	4.0	8.0	Q3
LMV932Q1MAX/NOPB	SOIC	D	8	2500	330.0	12.4	6.5	5.4	2.0	8.0	12.0	Q1
LMV934Q1MTX/NOPB	TSSOP	PW	14	2500	330.0	12.4	6.95	5.6	1.6	8.0	12.0	Q1

TAPE AND REEL BOX DIMENSIONS

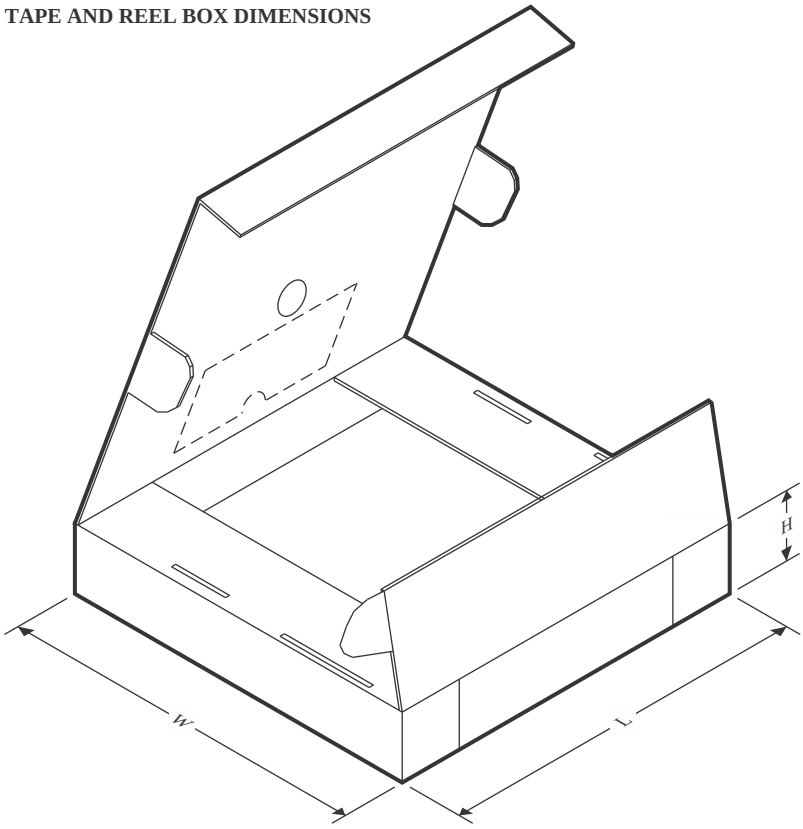

*All dimensions are nominal

Device	Package Type	Package Drawing	Pins	SPQ	Length (mm)	Width (mm)	Height (mm)
LMV931Q1MF/NOPB	SOT-23	DBV	5	1000	208.0	191.0	35.0
LMV931Q1MFX/NOPB	SOT-23	DBV	5	3000	208.0	191.0	35.0
LMV931Q1MG/NOPB	SC70	DCK	5	1000	208.0	191.0	35.0
LMV931Q1MGX/NOPB	SC70	DCK	5	3000	208.0	191.0	35.0
LMV932Q1MAX/NOPB	SOIC	D	8	2500	367.0	367.0	35.0
LMV934Q1MTX/NOPB	TSSOP	PW	14	2500	367.0	367.0	35.0

TUBE

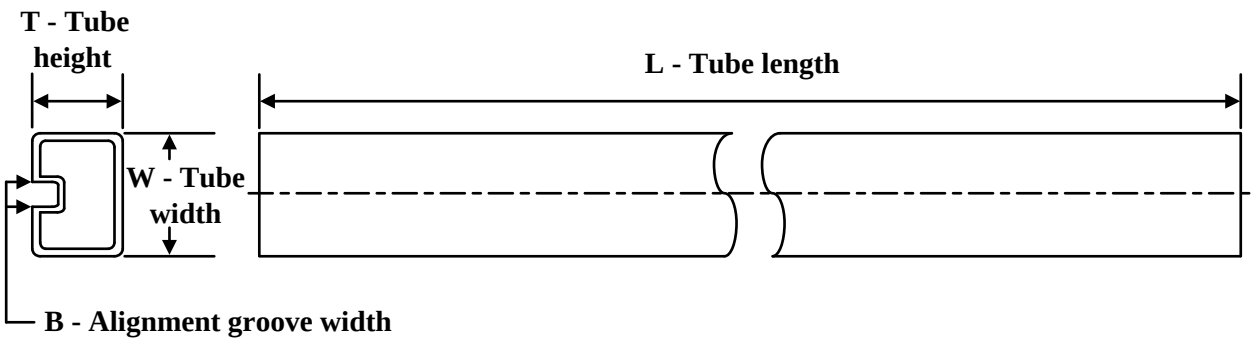

*All dimensions are nominal

Device	Package Name	Package Type	Pins	SPQ	L (mm)	W (mm)	T (µm)	B (mm)
LMV932Q1MA/NOPB	D	SOIC	8	95	495	8	4064	3.05
LMV932Q1MA/NOPB.A	D	SOIC	8	95	495	8	4064	3.05
LMV934Q1MT/NOPB	PW	TSSOP	14	94	495	8	2514.6	4.06
LMV934Q1MT/NOPB.A	PW	TSSOP	14	94	495	8	2514.6	4.06

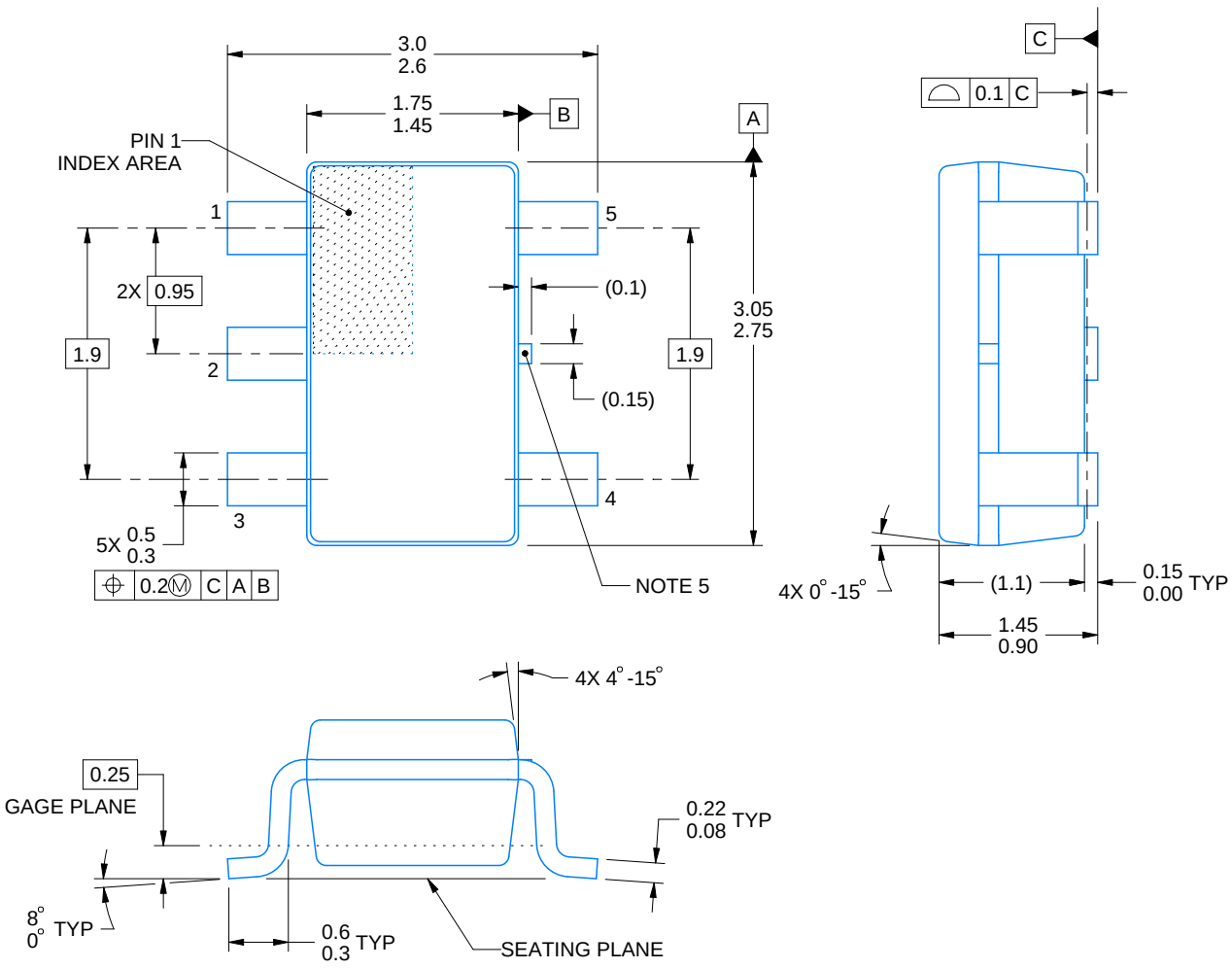

4214839/K 08/2024

NOTES:

1. All linear dimensions are in millimeters. Any dimensions in parenthesis are for reference only. Dimensioning and tolerancing per ASME Y14.5M.
2. This drawing is subject to change without notice.
3. Refernce JEDEC MO-178.
4. Body dimensions do not include mold flash, protrusions, or gate burrs. Mold flash, protrusions, or gate burrs shall not exceed 0.25 mm per side.
5. Support pin may differ or may not be present.

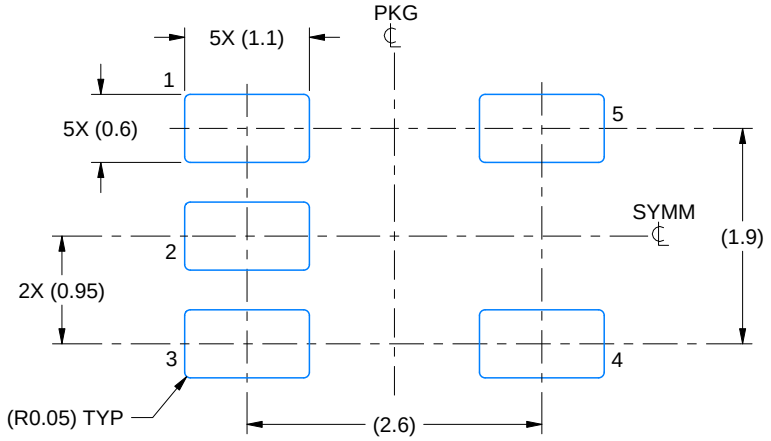

LAND PATTERN EXAMPLE
EXPOSED METAL SHOWN
SCALE:15X

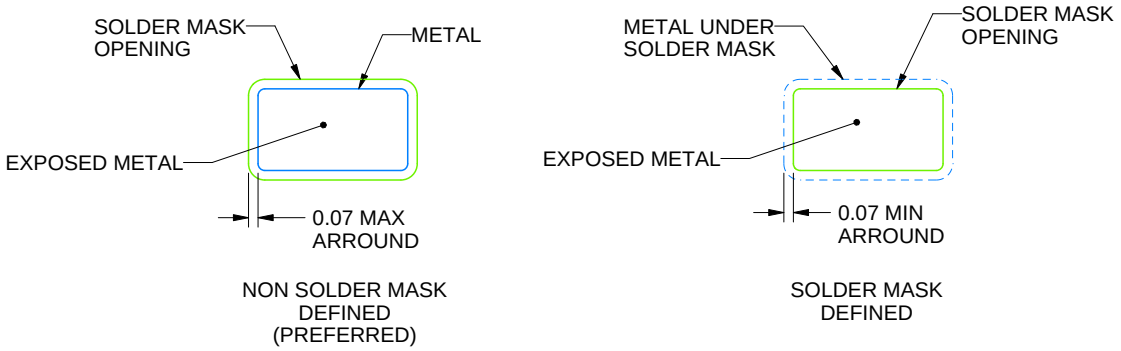

SOLDER MASK DETAILS

4214839/K 08/2024

NOTES: (continued)

6. Publication IPC-7351 may have alternate designs.
7. Solder mask tolerances between and around signal pads can vary based on board fabrication site.

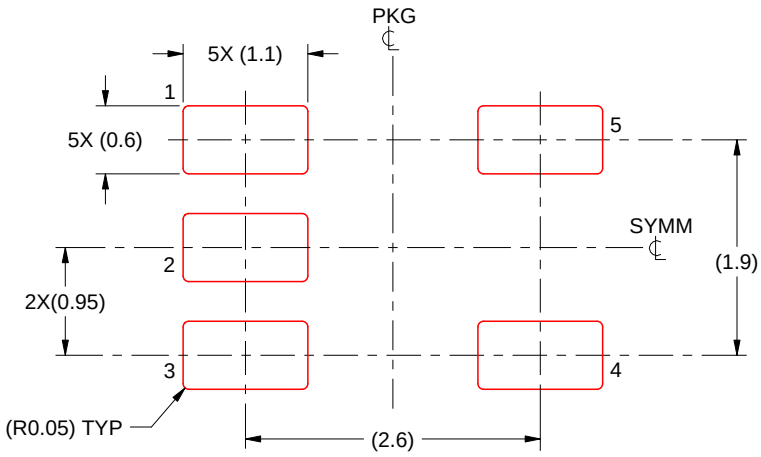

SOLDER PASTE EXAMPLE
BASED ON 0.125 mm THICK STENCIL
SCALE:15X

4214839/K 08/2024

NOTES: (continued)

8. Laser cutting apertures with trapezoidal walls and rounded corners may offer better paste release. IPC-7525 may have alternate design recommendations.
9. Board assembly site may have different recommendations for stencil design.

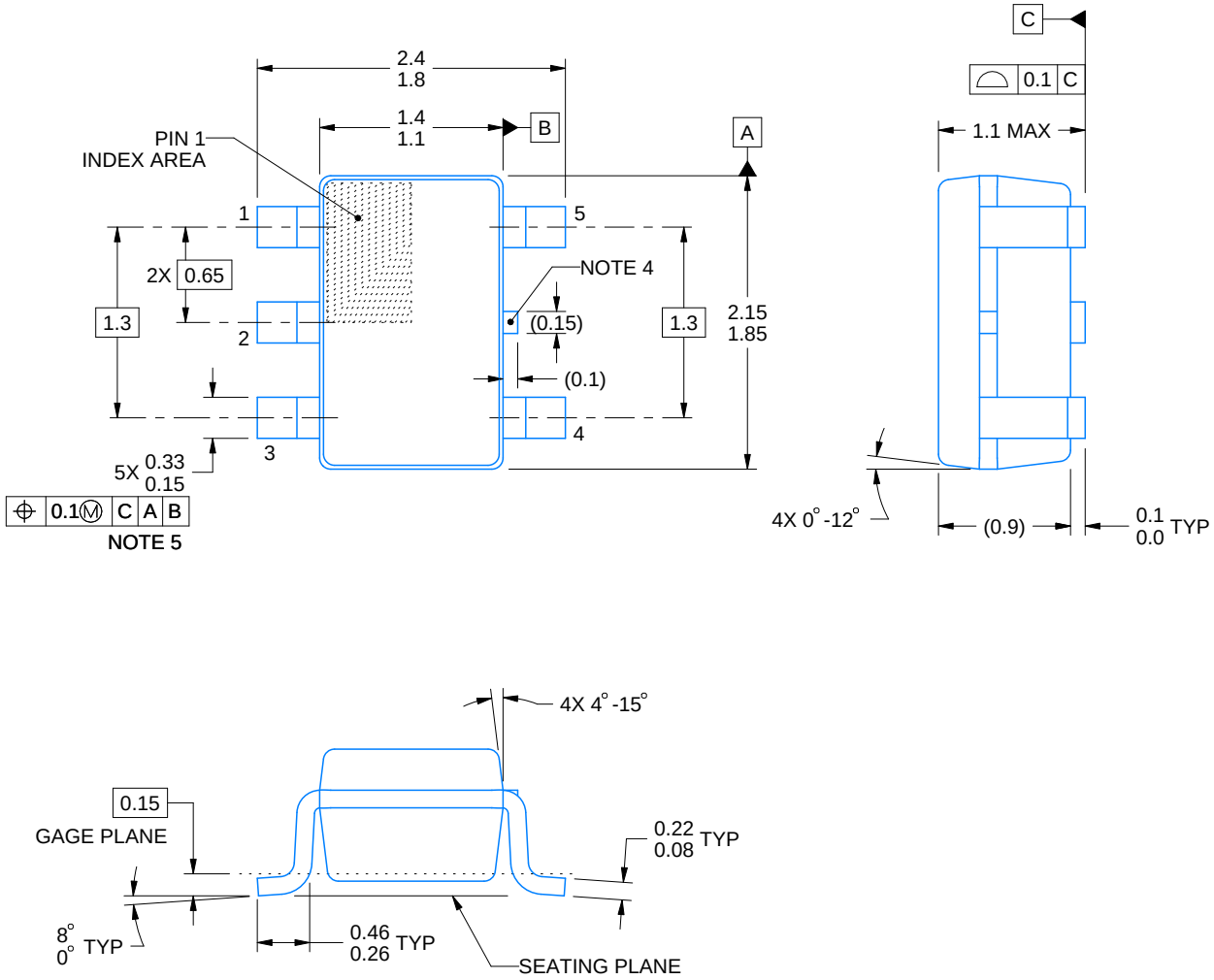

NOTES:

1. All linear dimensions are in millimeters. Any dimensions in parenthesis are for reference only. Dimensioning and tolerancing per ASME Y14.5M.
2. This drawing is subject to change without notice.
3. Refernce JEDEC MO-203.
4. Support pin may differ or may not be present.
5. Lead width does not comply with JEDEC.
6. Body dimensions do not include mold flash, protrusions, or gate burrs. Mold flash, protrusions, or gate burrs shall not exceed 0.25mm per side

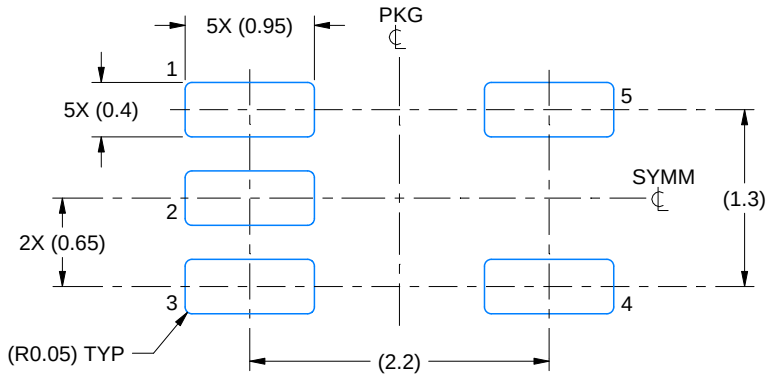

LAND PATTERN EXAMPLE
EXPOSED METAL SHOWN
SCALE:18X

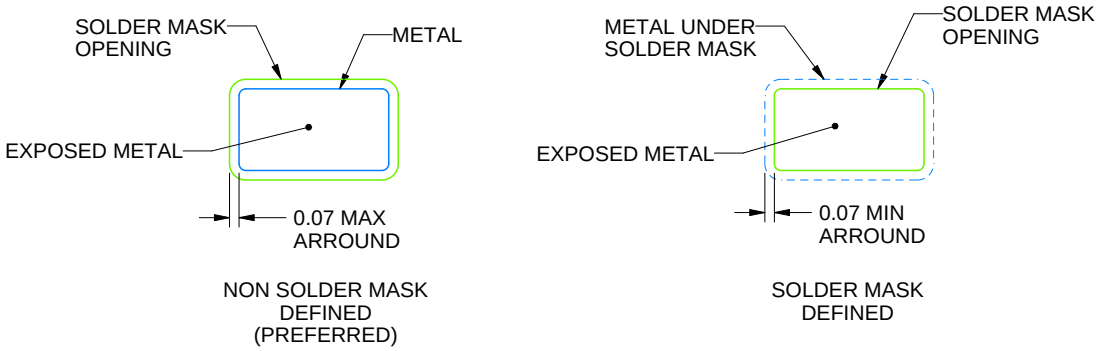

SOLDER MASK DETAILS

4214834/G 11/2024

NOTES: (continued)

7. Publication IPC-7351 may have alternate designs.
8. Solder mask tolerances between and around signal pads can vary based on board fabrication site.

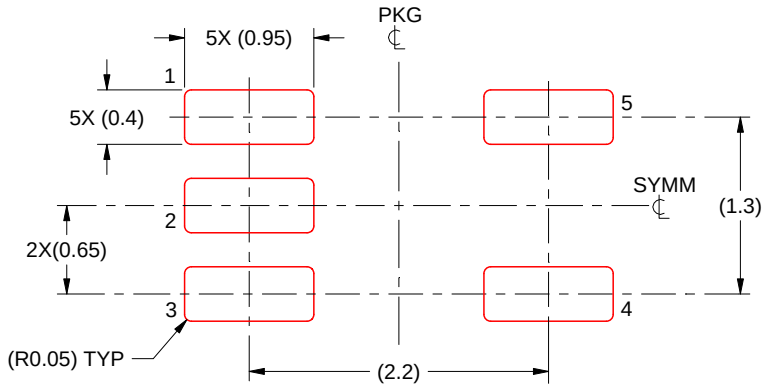

SOLDER PASTE EXAMPLE
BASED ON 0.125 THICK STENCIL
SCALE:18X

4214834/G 11/2024

NOTES: (continued)

9. Laser cutting apertures with trapezoidal walls and rounded corners may offer better paste release. IPC-7525 may have alternate design recommendations.
10. Board assembly site may have different recommendations for stencil design.

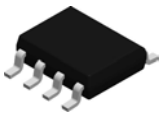

PACKAGE OUTLINE

D0008A

SOIC - 1.75 mm max height

SMALL OUTLINE INTEGRATED CIRCUIT

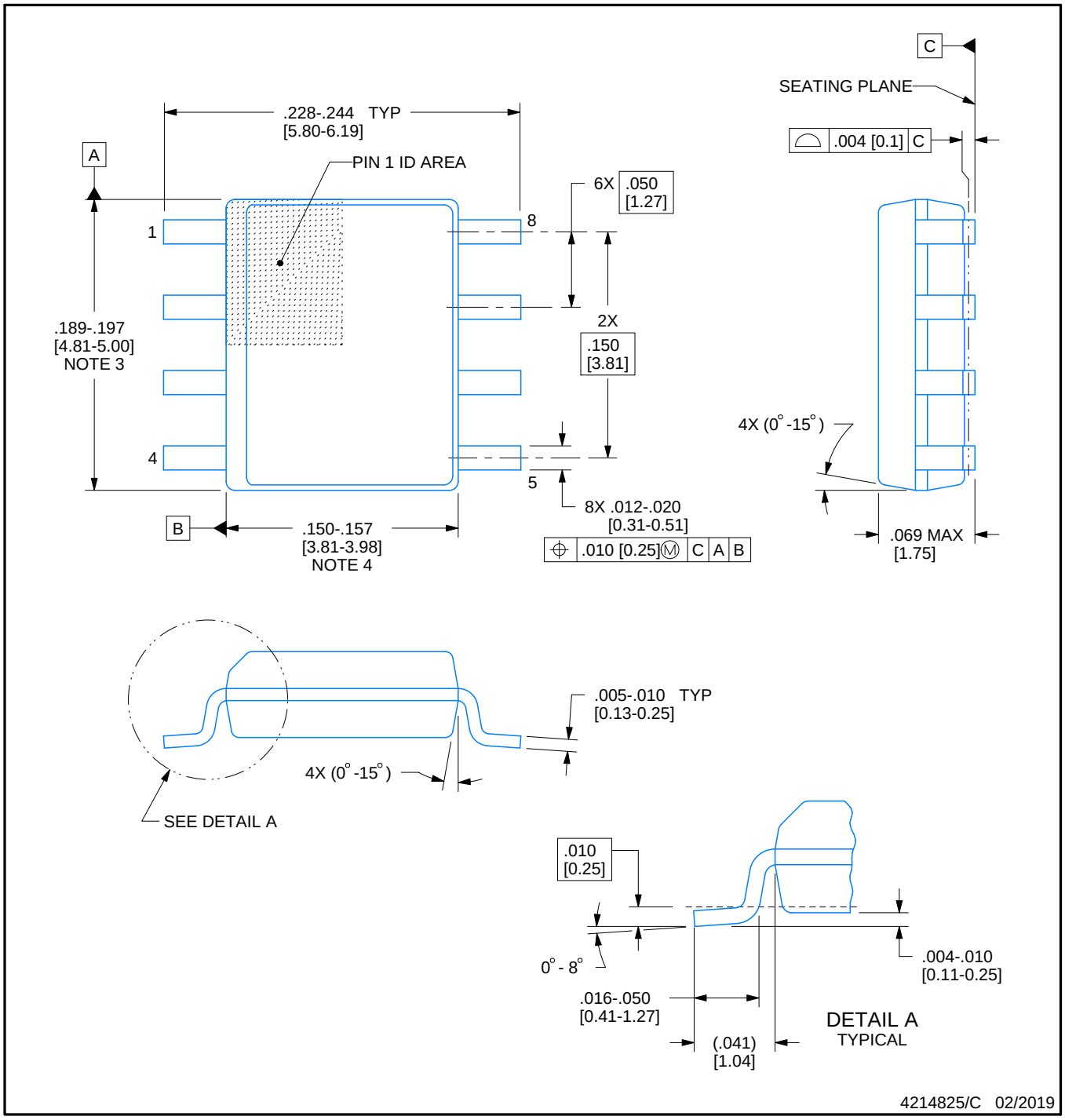

NOTES:

1. Linear dimensions are in inches [millimeters]. Dimensions in parenthesis are for reference only. Controlling dimensions are in inches. Dimensioning and tolerancing per ASME Y14.5M.
2. This drawing is subject to change without notice.
3. This dimension does not include mold flash, protrusions, or gate burrs. Mold flash, protrusions, or gate burrs shall not exceed .006 [0.15] per side.
4. This dimension does not include interlead flash.
5. Reference JEDEC registration MS-012, variation AA.

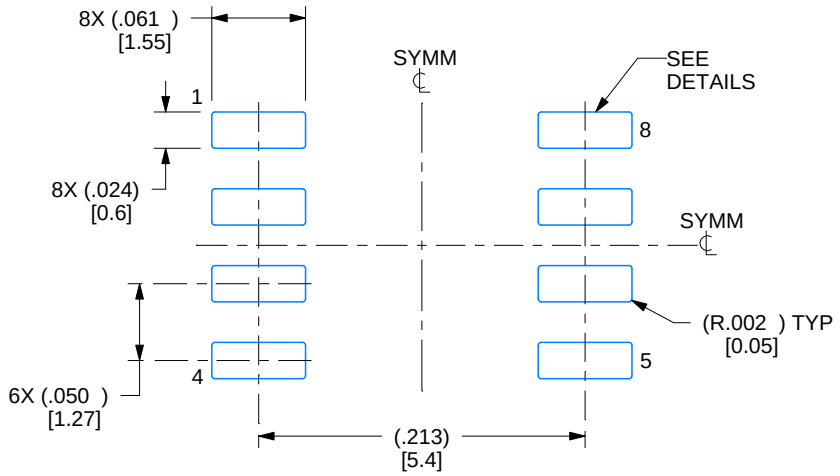

LAND PATTERN EXAMPLE
EXPOSED METAL SHOWN
SCALE:8X

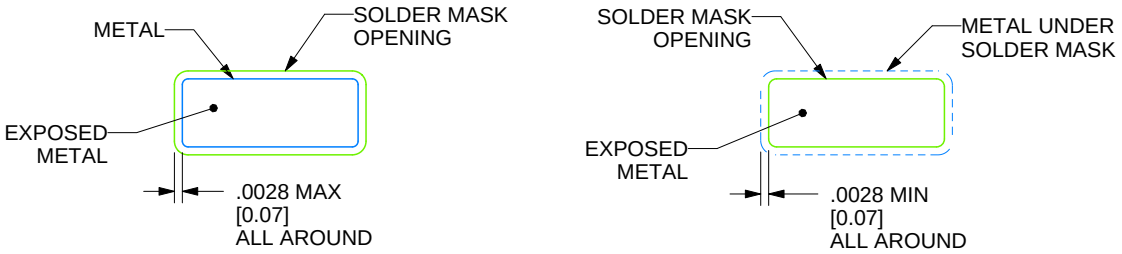

SOLDER MASK DETAILS

4214825/C 02/2019

NOTES: (continued)

6. Publication IPC-7351 may have alternate designs.
7. Solder mask tolerances between and around signal pads can vary based on board fabrication site.

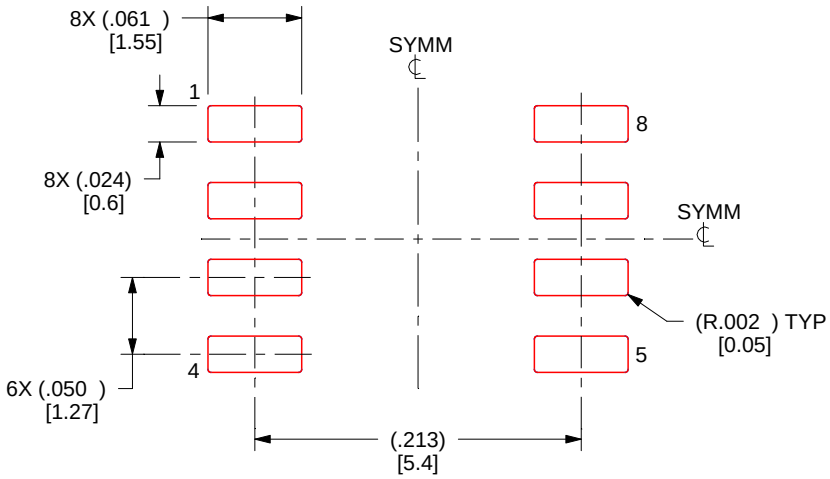

SOLDER PASTE EXAMPLE
BASED ON .005 INCH [0.125 MM] THICK STENCIL
SCALE:8X

4214825/C 02/2019

NOTES: (continued)

8. Laser cutting apertures with trapezoidal walls and rounded corners may offer better paste release. IPC-7525 may have alternate design recommendations.
9. Board assembly site may have different recommendations for stencil design.

PW0014A

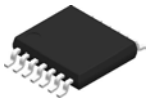

PACKAGE OUTLINE

TSSOP - 1.2 mm max height

SMALL OUTLINE PACKAGE

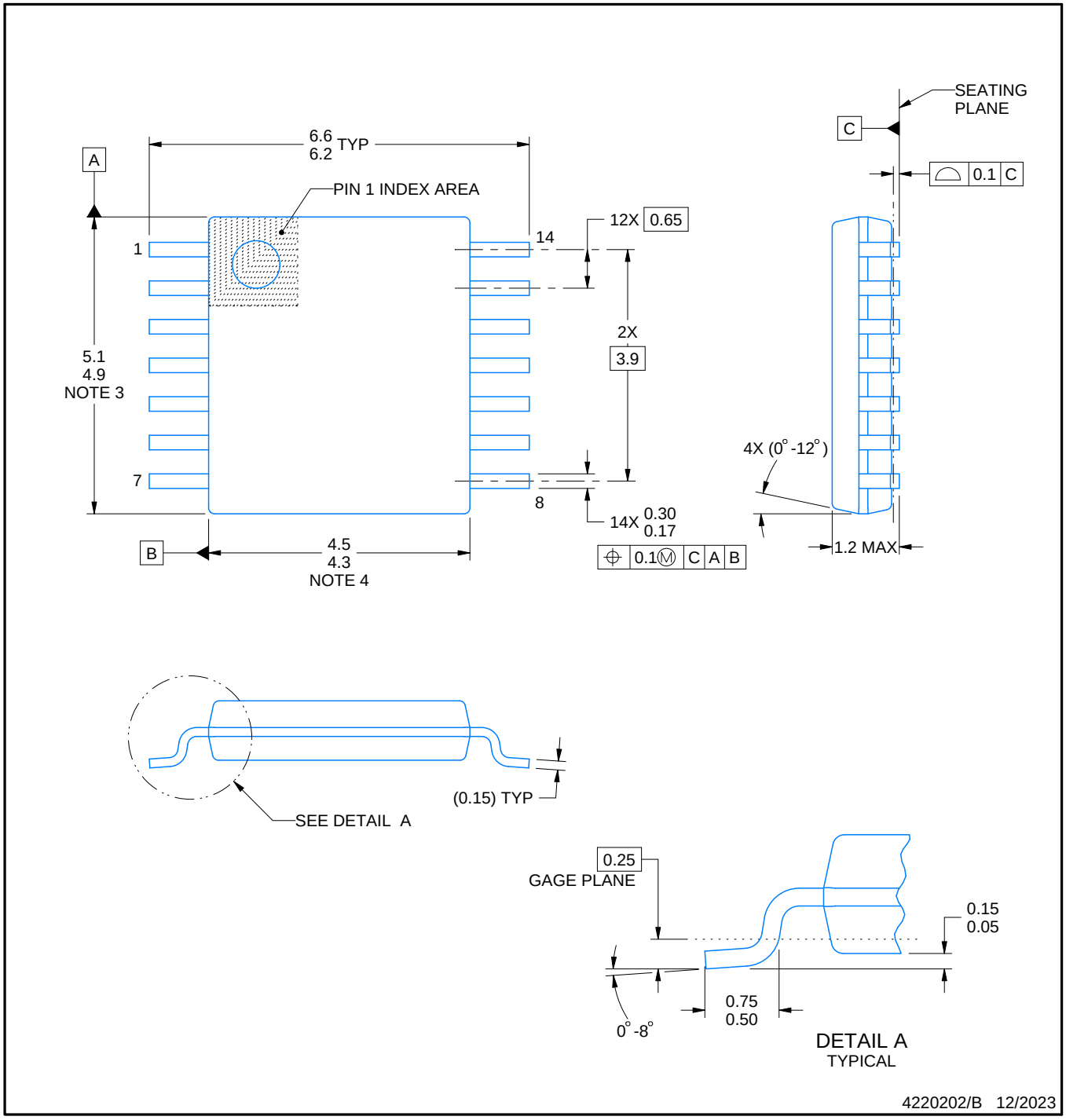

NOTES:

1. All linear dimensions are in millimeters. Any dimensions in parenthesis are for reference only. Dimensioning and tolerancing per ASME Y14.5M.
2. This drawing is subject to change without notice.
3. This dimension does not include mold flash, protrusions, or gate burrs. Mold flash, protrusions, or gate burrs shall not exceed 0.15 mm per side.
4. This dimension does not include interlead flash. Interlead flash shall not exceed 0.25 mm per side.
5. Reference JEDEC registration MO-153.

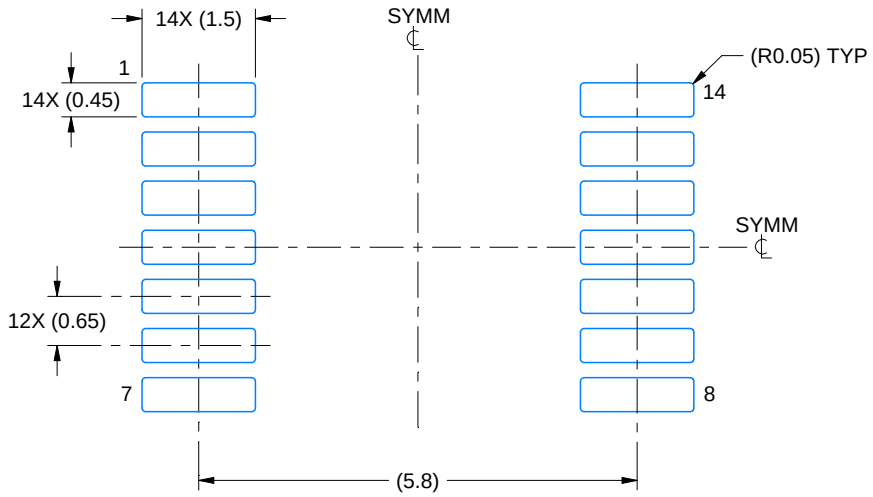

LAND PATTERN EXAMPLE
EXPOSED METAL SHOWN
SCALE: 10X

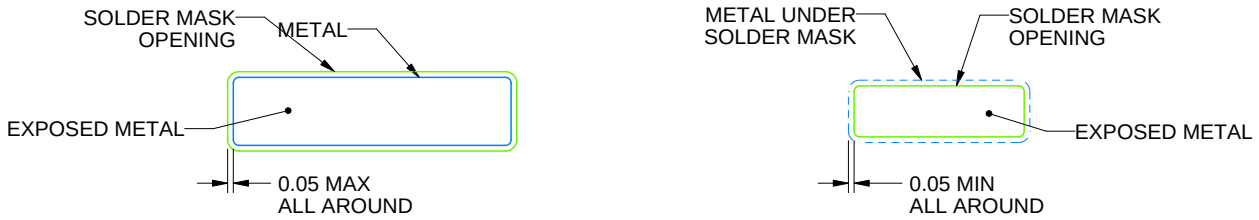

NON-SOLDER MASK DEFINED (PREFERRED)

SOLDER MASK DEFINED

SOLDER MASK DETAILS

4220202/B 12/2023

NOTES: (continued)

6. Publication IPC-7351 may have alternate designs.
7. Solder mask tolerances between and around signal pads can vary based on board fabrication site.

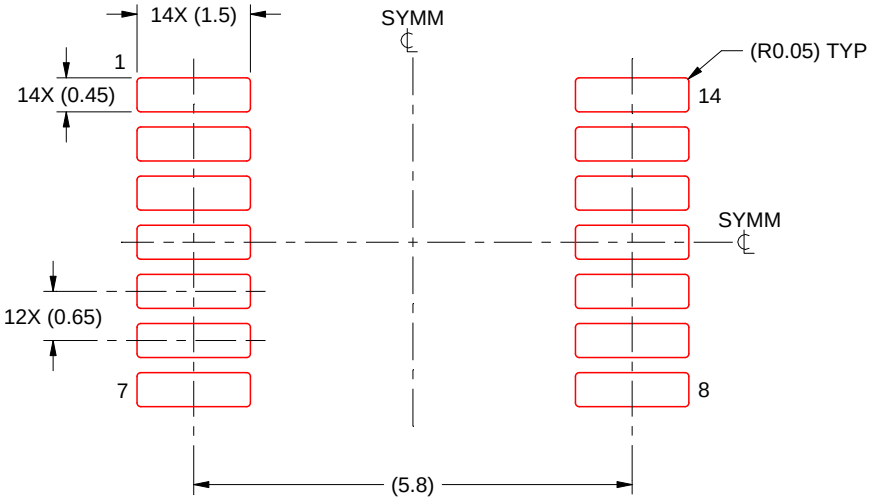

SOLDER PASTE EXAMPLE
BASED ON 0.125 mm THICK STENCIL
SCALE: 10X

4220202/B 12/2023

NOTES: (continued)

8. Laser cutting apertures with trapezoidal walls and rounded corners may offer better paste release. IPC-7525 may have alternate design recommendations.
9. Board assembly site may have different recommendations for stencil design.

重要なお知らせと免責事項

テキサス· インスツルメンツは、技術データと信頼性データ (データシートを含みます)、設計リソース (リファレンス デザインを含みます)、アプリケーションや設計に関する各種アドバイス、Web ツール、安全性情報、その他のリソースを、欠陥が存在する可能性のある「現状のまま」提供しており、商品性および特定目的に対する適合性の黙示保証、第三者の知的財産権の非侵害保証を含むいかなる保証も、明示的または黙示的にかかわらず拒否します。

これらのリソースは、 テキサス· インスツルメンツ製品を使用する設計の経験を積んだ開発者への提供を意図したものです。(1) お客様のアプリケーションに適した テキサス· インスツルメンツ製品の選定、(2) お客様のアプリケーションの設計、検証、試験、(3) お客様のアプリケーションに該当する各種規格や、その他のあらゆる安全性、セキュリティ、規制、または他の要件への確実な適合に関する責任を、お客様のみが単独で負うものとします。

上記の各種リソースは、予告なく変更される可能性があります。これらのリソースは、リソースで説明されている テキサス· インスツルメンツ製品を使用するアプリケーションの開発の目的でのみ、 テキサス· インスツルメンツはその使用をお客様に許諾します。これらのリソースに関して、他の目的で複製することや掲載することは禁止されています。 テキサス· インスツルメンツや第三者の知的財産権のライセンスが付与されている訳ではありません。お客様は、これらのリソースを自身で使用した結果発生するあらゆる申し立て、損害、費用、損失、責任について、 テキサス· インスツルメンツおよびその代理人を完全に補償するものとし、 テキサス· インスツルメンツは一切の責任を拒否します。

テキサス· インスツルメンツの製品は、 テキサス· インスツルメンツの販売条件、または ti.com やかかる テキサス· インスツルメンツ製品の関連資料などのいずれかを通じて提供する適用可能な条項の下で提供されています。 テキサス· インスツルメンツがこれらのリソースを提供することは、適用される テキサス· インスツルメンツの保証または他の保証の放棄の拡大や変更を意味するものではありません。

お客様がいかなる追加条項または代替条項を提案した場合でも、 テキサス· インスツルメンツはそれらに異議を唱え、拒否します。

郵送先住所：Texas Instruments, Post Office Box 655303, Dallas, Texas 75265
Copyright © 2025, Texas Instruments Incorporated