Revision History				
Rev	ECN #	Approved Date	Approved by	Notes
N/A	N/A	N/A	N/A	N/A

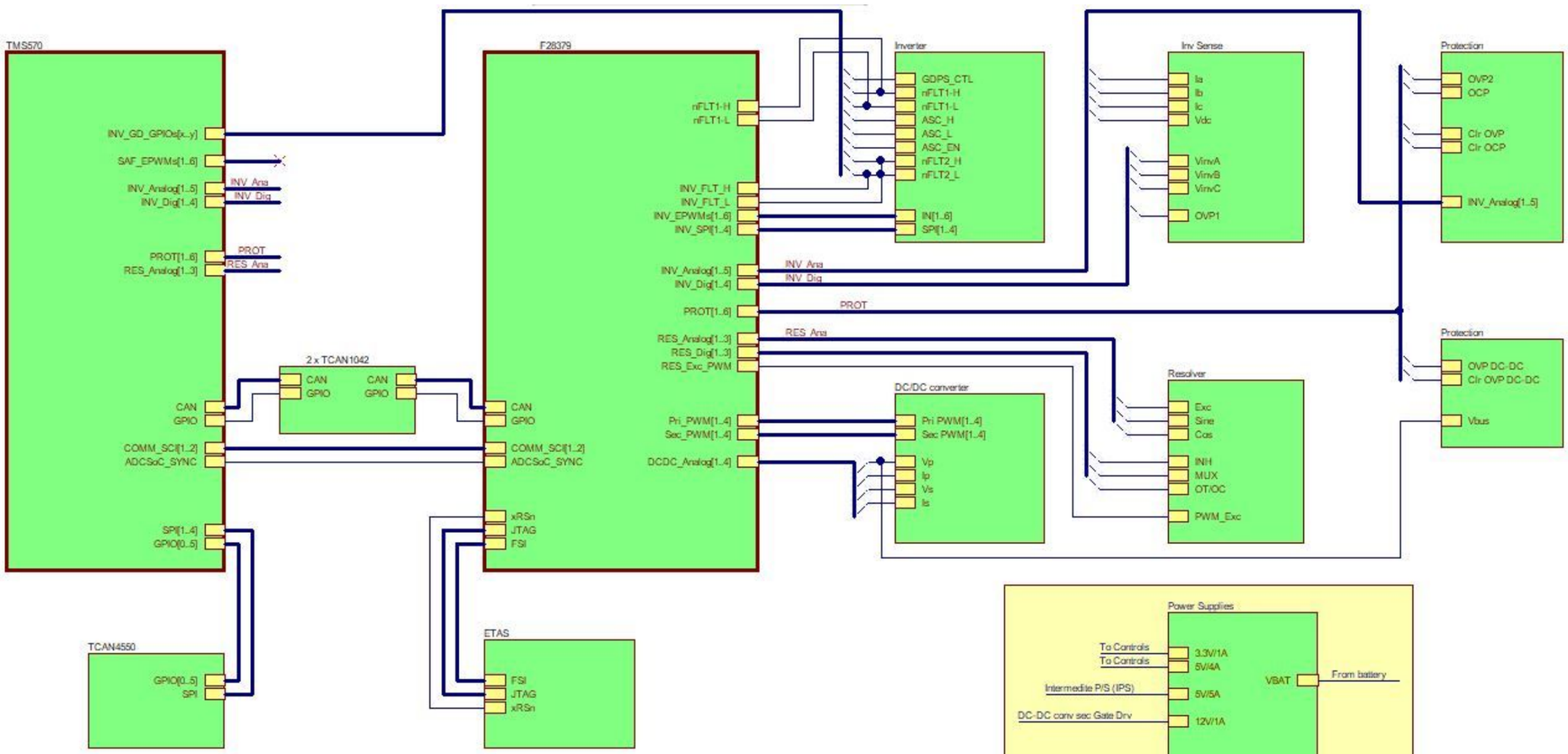

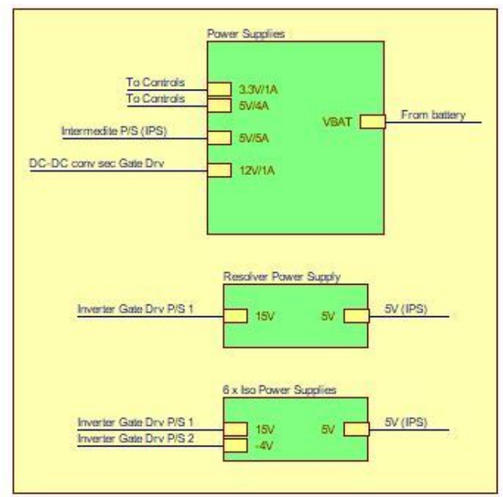

NOTE:-

1. Consider optional signals to 60 pin side of cc
2. ASC will handled by 570
3. C2000 will use CLB for generating similar signal as ASC
4. Add header on SPI for debugging purpose
5. CMPSS could be used as well, but external comp may be considered for safety

Texas Instruments and/or its licensors do not warrant the accuracy or completeness of this specification or any information contained therein. Texas Instruments and/or its licensors do not warrant that this design will meet the specifications, will be suitable for your application or fit for any particular purpose, or will operate in an implementation. Texas Instruments and/or its licensors do not warrant that the design is production worthy. You should completely validate and test your design implementation to confirm the system functionality for your application.

Orderable: ChangeMe in variant	Designed for: EV Traction	Mod. Date: 4/13/2020
TID #: TIDM-02009	Project Title: EV Traction Control Mother Board	
Number: EVT_001 Rev: E2	Sheet Title:	
SVN Rev: Version control disabled	Assembly Variant: 001	Sheet: 1 of 3
Drawn By:	File: CoverSheet.SchDoc	Size: B
Engineer: Ramesh Ramamoorthy	Contact: http://www.ti.com/support	

Texas Instruments
http://www.ti.com
© Texas Instruments 2020

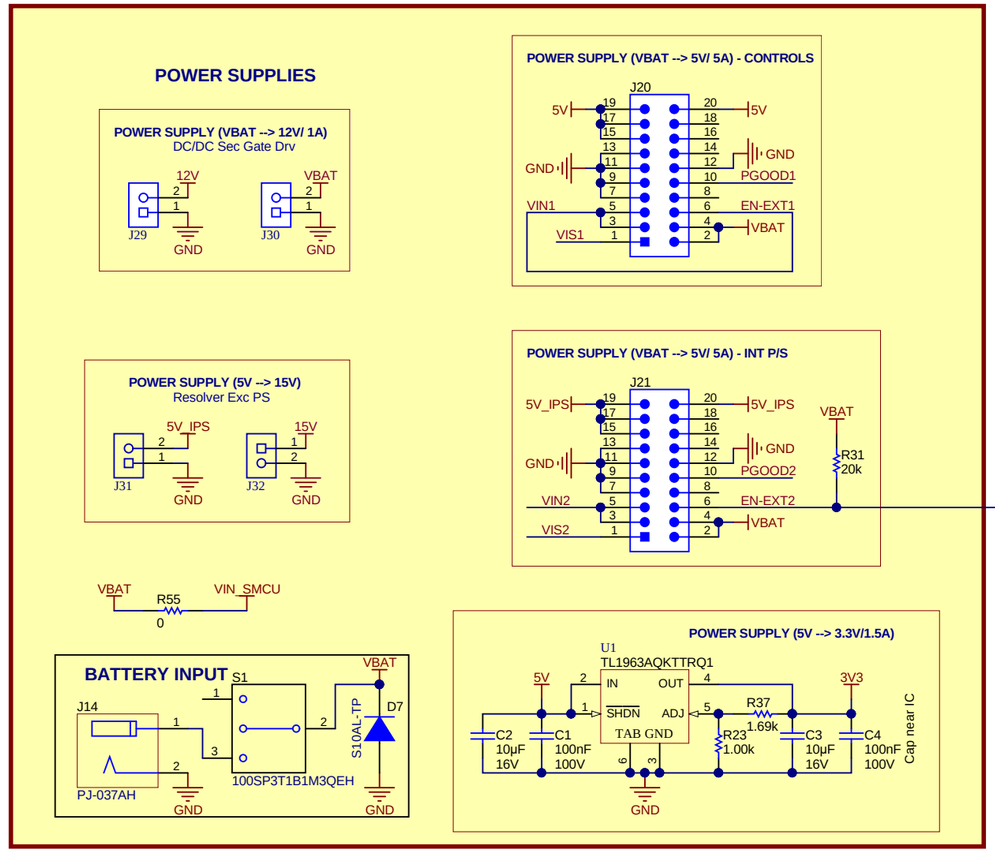

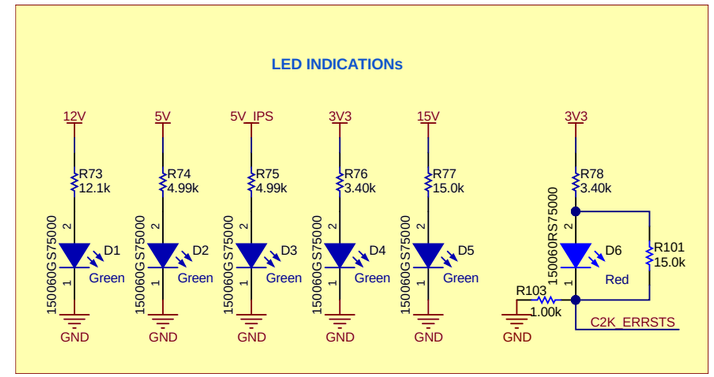

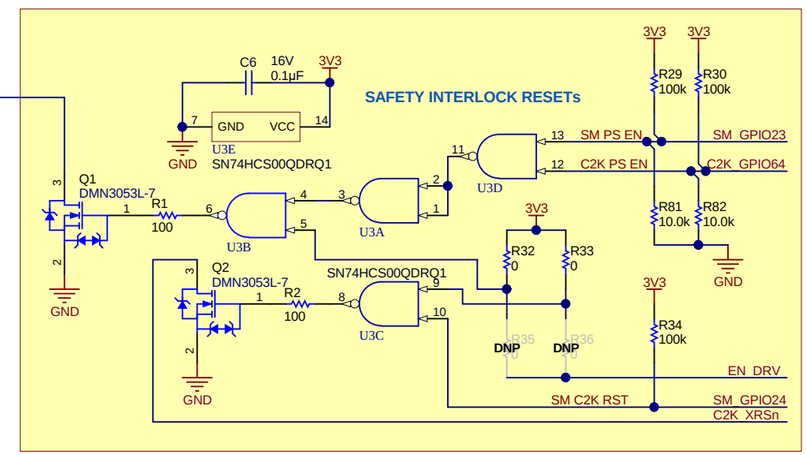

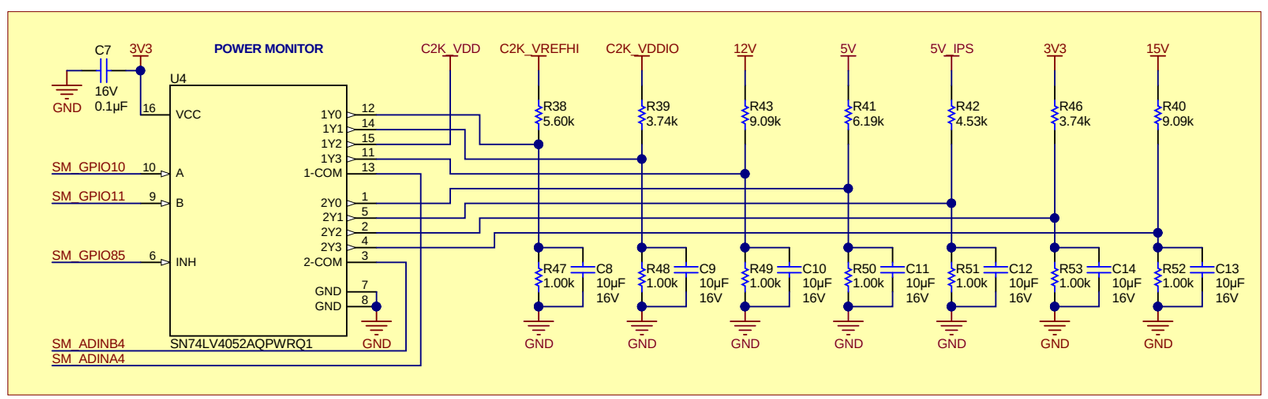

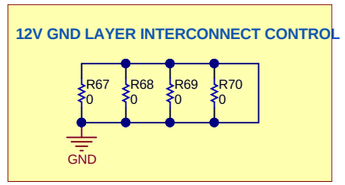

Texas Instruments and/or its licensors do not warrant the accuracy or completeness of this specification or any information contained therein. Texas Instruments and/or its licensors do not warrant that this design will meet the specifications, will be suitable for your application or fit for any particular purpose, or will operate in an implementation. Texas Instruments and/or its licensors do not warrant that the design is production worthy. You should completely validate and test your design implementation to confirm the system functionality for your application.

Orderable: ChangeMe in variant	Designed for: EV Traction	Mod. Date: 11/11/2020	Texas Instruments
TID #: TIDM-02009	Project Title: EV Traction Control Mother Board		
Number: EVT_001 Rev: E2	Sheet Title:		
SVN Rev: Version control disabled	Assembly Variant: 001	Sheet: 2 of 3	
Drawn By:	File: powerSupplyAndMontior_r1.SchDoc	Size: A3	http://www.ti.com
Engineer: Ramesh Ramamoorthy	Contact: http://www.ti.com/support		

© Texas Instruments 2020

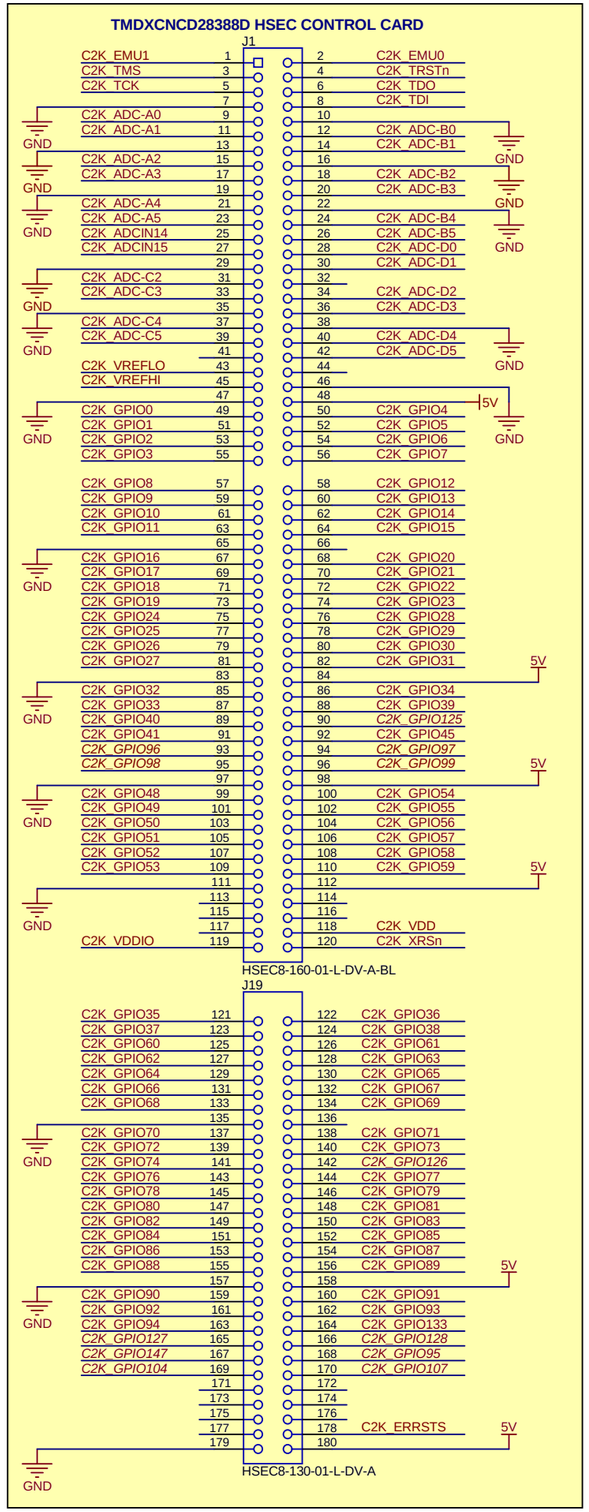

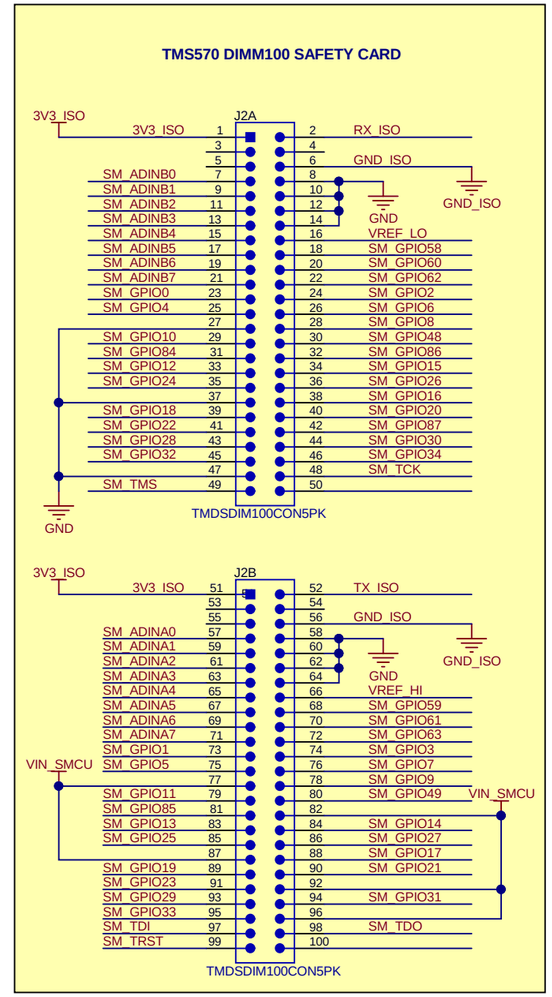

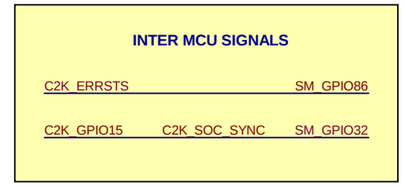

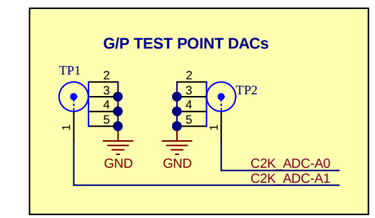

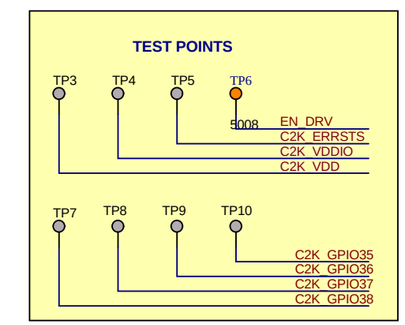

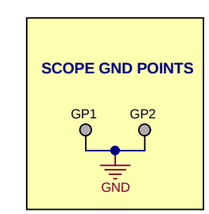

Texas Instruments and/or its licensors do not warrant the accuracy or completeness of this specification or any information contained therein. Texas Instruments and/or its licensors do not warrant that this design will meet the specifications, will be suitable for your application or fit for any particular purpose, or will operate in an implementation. Texas Instruments and/or its licensors do not warrant that the design is production worthy. You should completely validate and test your design implementation to confirm the system functionality for your application.

Orderable: ChangeMe in variant	Designed for: EV Traction	Mod. Date: 11/11/2020	
TID #: TIDM-02009	Project Title: EV Traction Control Mother Board		
Number: EVT_001 Rev: E2	Sheet Title:		
SVN Rev: Version control disabled	Assembly Variant: 001	Sheet: 2 of 3	
Drawn By:	File: MotherBoard_r2.SchDoc	Size: A3	
Engineer: Ramesh Ramamoorthy	Contact: http://www.ti.com/support		

Texas Instruments
http://www.ti.com

© Texas Instruments 2020

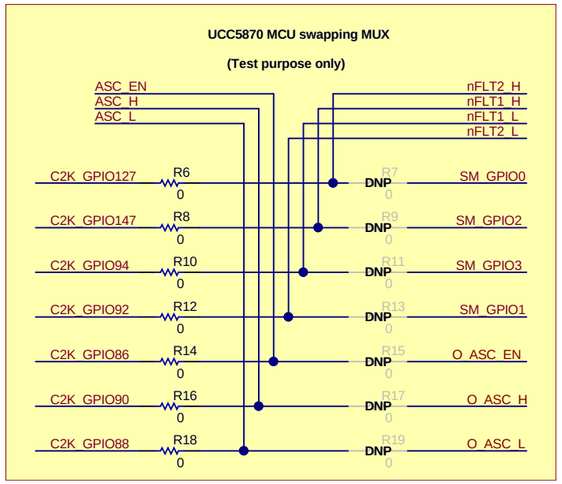

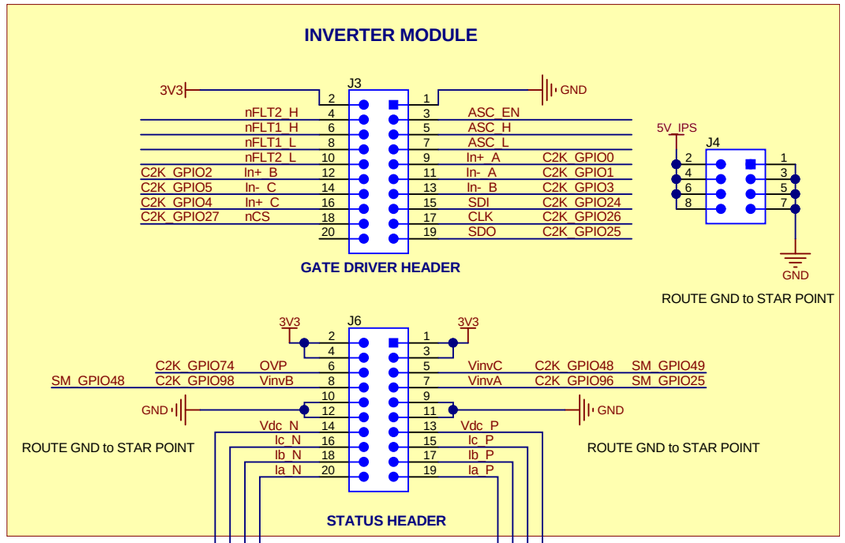

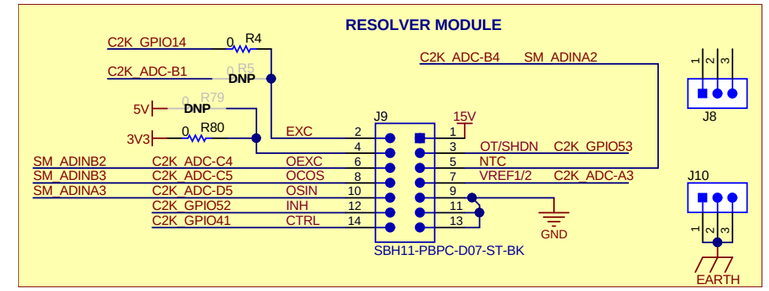

NOTE: -
QEP header will have direct access to SPIA using Tenor GPIO MUX. Can be useful for debug

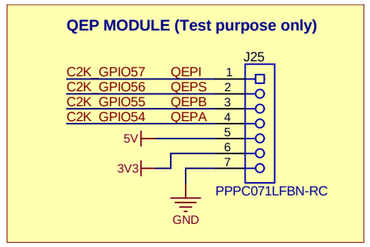

NOTE: -
ENDRV --> LOGIC 1 is GOOD
LOGIC 1 --> SELECT Y (SMCU SIGNALS)
LOGIC 0 --> SELECT X (DEFAULT SIGNALS)

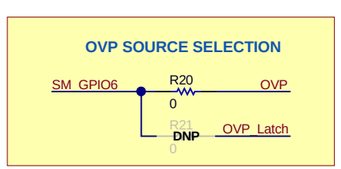

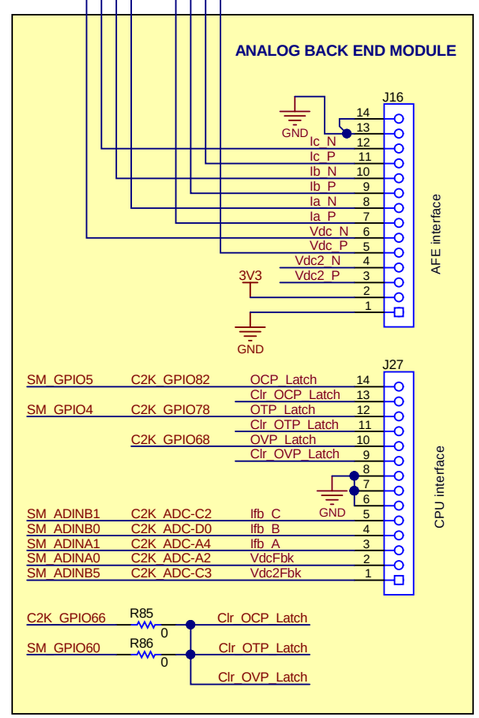

NOTE: -
Temp signal changed to Vdc2 from DC-DC unit as HS temp is not brought in.

NOTE: -
Vdc2Fbk signal is for DC-DC converter

NOTE: -
Fault latch clear routed to SMCU as a single source clear

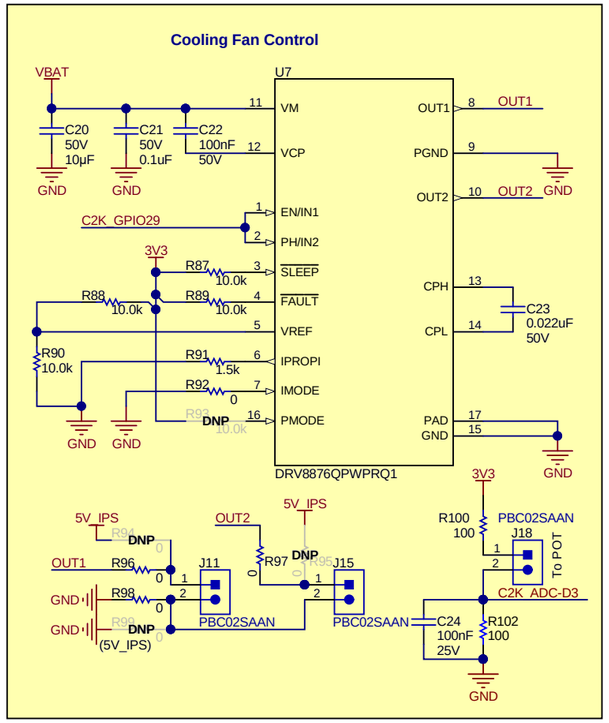

Orderable: ChangeMe in variant	Designed for: EV Traction	Mod. Date: 11/11/2020	
TID #: TIDM-02009	Project Title: EV Traction Control Mother Board		
Number: EVT_001 Rev: E2	Sheet Title:		
SVN Rev: Version control disabled	Assembly Variant: 001	Sheet: 2 of 3	
Drawn By:	File: ChildBoardMotor_r2.SchDoc	Size: B	
Engineer: Ramesh Ramamoorthy	Contact: http://www.ti.com/support		

Texas Instruments and/or its licensors do not warrant the accuracy or completeness of this specification or any information contained therein. Texas Instruments and/or its licensors do not warrant that this design will meet the specifications, will be suitable for your application or fit for any particular purpose, or will operate in an implementation. Texas Instruments and/or its licensors do not warrant that the design is production worthy. You should completely validate and test your design implementation to confirm the system functionality for your application.

Texas Instruments
http://www.ti.com
© Texas Instruments 2020

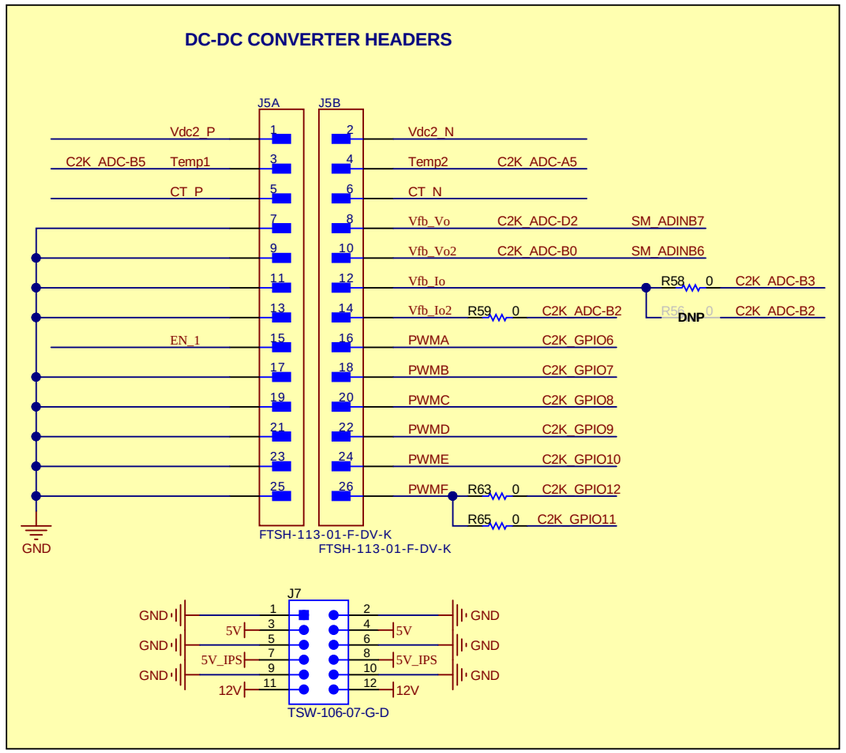

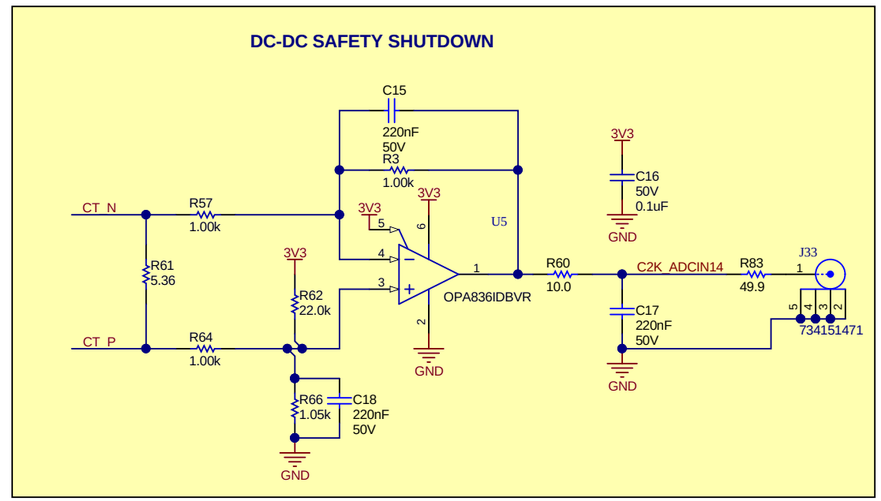

NOTE:
Current sense from CT_P / CT_N or co-axial will be chosen based on req such as noise, etc...

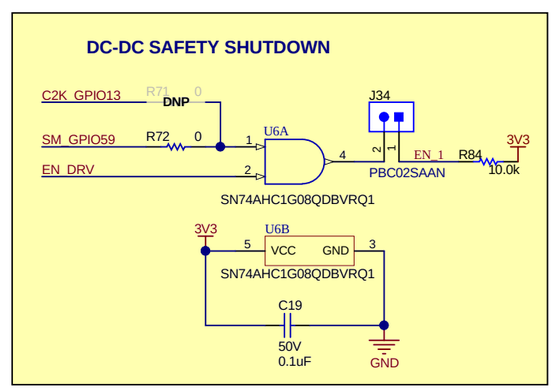

NOTE: -
Vo and Vo2 are fed into ADC of SMCU

Texas Instruments and/or its licensors do not warrant the accuracy or completeness of this specification or any information contained therein. Texas Instruments and/or its licensors do not warrant that this design will meet the specifications, will be suitable for your application or fit for any particular purpose, or will operate in an implementation. Texas Instruments and/or its licensors do not warrant that the design is production worthy. You should completely validate and test your design implementation to confirm the system functionality for your application.

Orderable: ChangeMe in variant	Designed for: EV Traction	Mod. Date: 11/3/2020
TID #: TIDM-02009	Project Title: EV Traction Control Mother Board	
Number: EVT_001 Rev: E2	Sheet Title:	
SVN Rev: Version control disabled	Assembly Variant: 001	Sheet: 2 of 3
Drawn By:	File: ChildBoardDC-DC_r2.SchDoc	Size: B
Engineer: Ramesh Ramamoorthy	Contact: http://www.ti.com/support	

Texas Instruments
http://www.ti.com
© Texas Instruments 2020

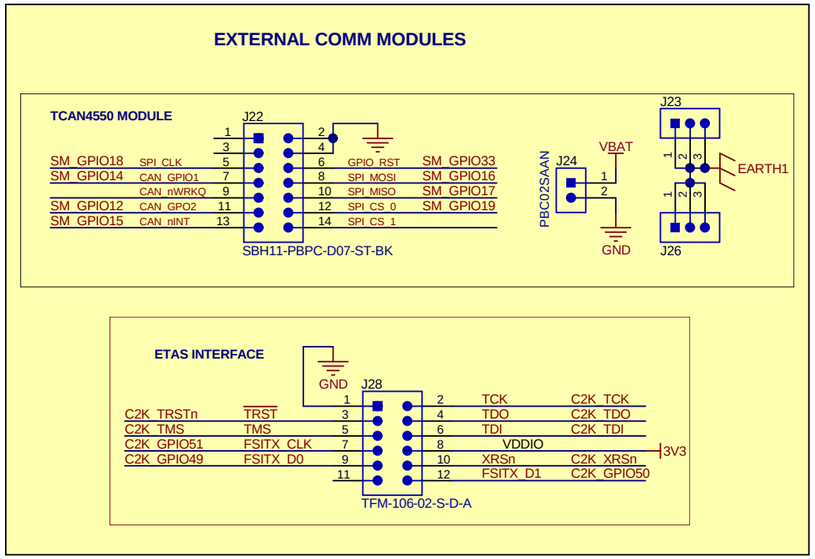

NOTE:-
JTAG header is a subset of ETAS header
So JTAG header is removed.

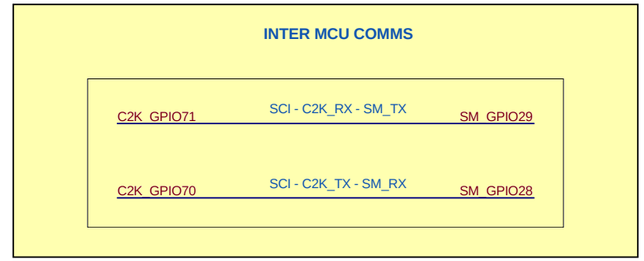

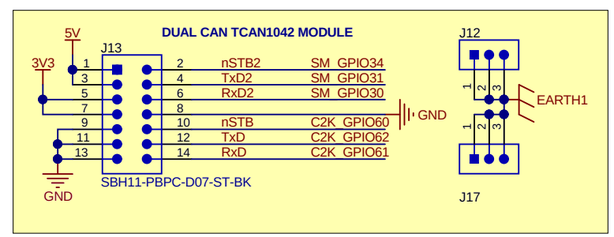

Texas Instruments and/or its licensors do not warrant the accuracy or completeness of this specification or any information contained therein. Texas Instruments and/or its licensors do not warrant that this design will meet the specifications, will be suitable for your application or fit for any particular purpose, or will operate in an implementation. Texas Instruments and/or its licensors do not warrant that the design is production worthy. You should completely validate and test your design implementation to confirm the system functionality for your application.

Orderable: ChangeMe in variant	Designed for: EV Traction	Mod. Date: 9/1/2020
TID #: TIDM-02009	Project Title: EV Traction Control Mother Board	
Number: EVT_001 Rev: E2	Sheet Title:	
SVN Rev: Version control disabled	Assembly Variant: 001	Sheet: 2 of 3
Drawn By:	File: ChildBoardComms_r3.SchDoc	Size: B
Engineer: Ramesh Ramamoorthy	Contact: http://www.ti.com/support	

Texas Instruments
http://www.ti.com
© Texas Instruments 2020

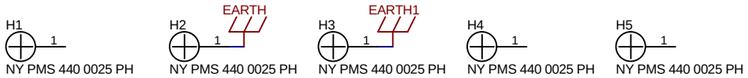

PCB Number: EVT_001
PCB Rev: E2

PCB
LOGO
Texas Instruments

CE Mark

PCB
LOGO
FCC disclaimer

PCB
LOGO
WEEE logo

Logo5
PCB
LOGO
CAUTION. READ USER GUIDE BEFORE USE

Variant/Label Table	
Variant	Label Text
001	ChangeMe!
002	ChangeMe!

ZZ1
Label Assembly Note
This Assembly Note is for PCB labels only

ZZ2
Assembly Note
These assemblies are ESD sensitive, ESD precautions shall be observed.

ZZ3
Assembly Note
These assemblies must be clean and free from flux and all contaminants. Use of no clean flux is not acceptable.

ZZ4
Assembly Note
These assemblies must comply with workmanship standards IPC-A-610 Class 2, unless otherwise specified.

Texas Instruments and/or its licensors do not warrant the accuracy or completeness of this specification or any information contained therein. Texas Instruments and/or its licensors do not warrant that this design will meet the specifications, will be suitable for your application or fit for any particular purpose, or will operate in an implementation. Texas Instruments and/or its licensors do not warrant that the design is production worthy. You should completely validate and test your design implementation to confirm the system functionality for your application.

Orderable: ChangeMe in variant		Designed for: EV Traction	Mod. Date: 11/2/2020
TID #: TIDM-02009		Project Title: EV Traction Control Mother Board	
Number: EVT_001	Rev: E2	Sheet Title:	
SVN Rev: Version control disabled		Assembly Variant: 001	Sheet: 3 of 3
Drawn By:		File: Hardware.SchDoc	Size: B
Engineer: Ramesh Ramamoorthy		Contact: http://www.ti.com/support	

TEXAS INSTRUMENTS
http://www.ti.com
© Texas Instruments 2020